TM 9-2350-366-20-1-1

TECHNICAL MANUAL

UNIT MAINTENANCE MANUAL

FOR

OPPOSING FORCES SURROGATE VEHICLE (OSV)
M113A3/BMP-2
6920-01-420-4716 (EIC AUK)
HULL

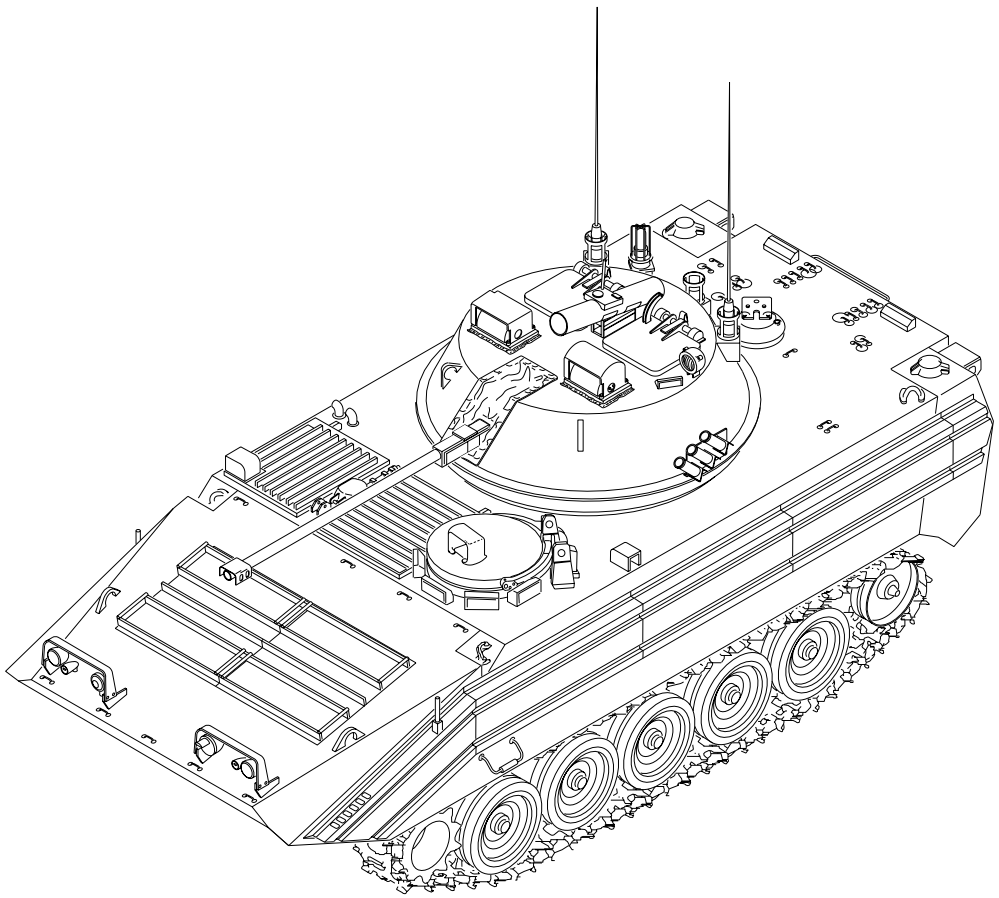

DISTRIBUTION STATEMENT A — Approved for public release; distribution is unlimited.

HEADQUARTERS, DEPARTMENT OF THE ARMY

26 July 2001

WARNING SUMMARY

WARNING SUMMARY

This section summarizes all critical safety information in this TM. It includes general WARNINGS not found in the Work Package (WP) procedures and hazardous materials WARNINGS.

Prior to starting any WP procedure, the WARNINGS included in the text for that WP must be reviewed and understood.

Also review the materials list in the INITIAL SETUP of the WP for hazardous materials used during maintenance of the equipment. Then refer to the detailed WARNINGS for hazardous materials listed separately in this WARNING SUMMARY under the heading HAZARDOUS MATERIALS WARNINGS.

GENERAL WARNINGS NOT FOUND IN WP PROCEDURES

The following WARNINGS are general safety statements. They are not unique to any specific procedures. All personnel operating this equipment or working near this equipment must understand and continually observe the precautions in these WARNINGS.

WARNING

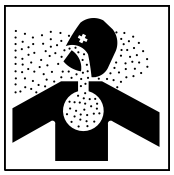

Heater and engine exhaust fumes contain deadly poisonous gases.

Severe exposure can cause death or permanent brain damage.

Exhaust gases are most dangerous in places with poor air flow. The best defense against exhaust gas poisoning is very good air flow.

To protect yourself and your partners, always obey the following rules:

- **Do not run heater or engine indoors unless you have VERY GOOD AIR FLOW.**
- **Do not idle engine for a long time unless there is VERY GOOD AIR FLOW.**
- **Do not drive vehicle with any power plant access covers, plates, or doors open.**
- **BE ALERT at all times. Check for the smell of exhaust fumes. If you notice any fumes, OPEN HATCH COVERS OR ENCLOSURE DOOR RIGHT AWAY. USE VENT FANS.**
- **REMEMBER: The best defense against exhaust gas poisoning is VERY GOOD AIR FLOW.**
- **Exhaust gas poisoning causes dizziness, headache, loss of muscle control, sleepiness, coma, and death. If anyone shows signs of exhaust gas poisoning, get ALL PERSONNEL out of vehicle. Make sure they have lots of fresh air. KEEP THEM WARM, CALM, AND INACTIVE. GET MEDICAL HELP. If anyone stops breathing, give artificial respiration. See FM 21-11 for first aid.**

WARNING

Energized system and equipment can burn you. If MASTER SWITCH is ON, electrical system and equipment will be energized. Make sure MASTER SWITCH is OFF when you work on electrical system or equipment.

WARNING SUMMARY (cont)

WARNING

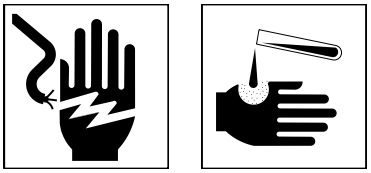

Short circuiting battery posts with metal objects can cause it to explode. Exploding battery can kill or seriously injure personnel. Contact with battery acid can seriously injure personnel. Follow these guidelines when working with batteries:

Do not wear jewelry when working on batteries or electrical system.
Do not allow tools or other metal objects to contact battery posts or electrical system.
Do not allow acid to contact your skin or eyes.
Keep batteries away from sparks or open flame.

WARNING

Equipment can start up unexpectedly. Unexpected startup of equipment can kill or seriously injure personnel.

Place DO NOT OPERATE tags on MASTER POWER and TURRET POWER switches when needed to prevent startup. If other soldiers are working on your vehicle, be sure you know what they are doing.

WARNING

Noise from vehicle can damage hearing of soldiers in vehicle. All personnel in vehicle MUST WEAR DOUBLE HEARING PROTECTION when vehicle is operated. Hearing protection devices must be properly worn to provide effective protection.

If DOUBLE HEARING PROTECTION is not worn, the safe level of noise exposure will be exceeded in a short time. Hearing loss occurs gradually. Each noise exposure that exceeds the ear protection guidelines below will cause a temporary hearing loss. Over time, the loss in hearing will become permanent. Plan each day's operation, and be sure all crew and riders have the required ear protectors. Spare foam earplugs must be available.

WARNING SUMMARY (cont)

Definitions

CVC Helmet	The “tanker’s helmet”. Must be in good condition, with liner and earcups fitted tightly, and chin strap worn at all times.
Earplugs	Only standard issue earplugs are acceptable. All personnel must be trained in how to use them. Since they may be removed and lost, spares must be carried.
Double Hearing Protection	Use of two hearing protection devices at the same time. For this vehicle use earplugs with CVC helmet.

Ear Protection Guidelines

Driver

(1) Must wear CVC helmet at all times.
(2) Must wear CVC helmet plus earplugs for operations exceeding 14 miles (23 km) in 24 hours.

Track Commander

(1) Must wear CVC helmet at all times.
(2) Must wear CVC helmet plus earplugs for all operations exceeding 14 miles (23 km) in 24 hours.

Personnel in Crew Compartment

(1) Must wear CVC helmet or headset at all times.
(2) Personnel with CVC helmet or headset must also wear earplugs for all operations exceeding 14 miles (23 km) in 24 hours.

Use of Radio with Earplugs

(1) Wearing foam earplugs in addition to your CVC helmet or headset can actually improve your ability to hear the radio in a high level noise area. DO NOT remove earplugs to use radio.

WARNING

Vehicle components are very hot after the engine has been running at operating temperature. Contact with hot components can seriously injure personnel. The tasks in this manual assume that vehicle components are cool.

Allow vehicle to cool before working on it. If work must be performed while components are still hot, use heat protective gloves.

WARNING

Starting engine right after a fire could restart the fire and kill or injure personnel.

Do not turn MASTER POWER switch ON or start engine until the fire is out and the cause of fire has been repaired or removed.

WARNING SUMMARY (cont)

WARNING

Hanging loads, heavy parts, and overhead equipment can fall unexpectedly. Falling loads can kill or seriously injure personnel.

Keep away from hanging loads, heavy parts, and overhead equipment. Use correct lifting devices to move hanging loads and heavy parts. Always have helper guide you. Keep hands and feet out of confined spaces from which heavy loads are being installed or removed.

HAZARDOUS MATERIALS WARNINGS

The following are detailed WARNINGS for hazardous materials used during maintenance of equipment. When these materials are used in a procedure, a general warning will be provided with a reference to the detailed information in this section. All personnel maintaining this equipment must be familiar with the safety precautions related to these materials.

WARNING

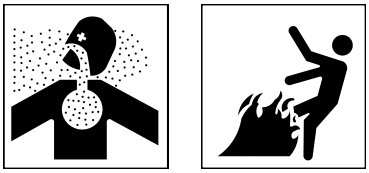

Cleaning solvent is mildly toxic. Solvent evaporates and both the fumes and liquid are flammable. Continued contact with solvent can cause skin problems.

- **Ensure there is good air flow when using solvent and work area is away from heat and flames.**
- **Keep fire extinguisher nearby.**
- **Do not breathe solvent fumes.**
- **Avoid skin contact. Use gloves or a brush if necessary.**
- **Wash hands after using solvent.**
- **Wear eye protection if solvent could splash into eyes.**
- **If solvent gets in eyes, flush with fresh water for at least 15 minutes and get medical assistance.**

Do not use P-D-680 solvent, dry cleaning solvent, benzene (benzol), paint thinner, gasoline, or diesel fuel oil as solvent replacements. These materials are all more flammable, more toxic, and can damage materials that approved solvent does not.

WARNING SUMMARY (cont)

WARNING

Chemical agent resistant coating (CARC) paint contains isocyanate (HDI) which is highly irritating to skin and respiratory system. High concentrations of HDI can cause itching and reddening of skin, a burning sensation in throat and nose, and watering eyes. In extreme concentrations, HDI can cause coughing, shortness of breath, pain during breathing, increased sputnum production, and chest tightness. The following precautions must be taken whenever using CARC paint:

- **ALWAYS use air line respirators when using CARC paint unless air sampling shows exposure to be below standards. Use chemical cartridge respirator if air sampling is below standards.**
- **DO NOT let skin or eyes come in contact with CARC paint. Always wear protective equipment (gloves, ventilation mask, goggles, etc.).**
- **DO NOT use CARC paint without adequate ventilation.**
- **NEVER weld or cut CARC painted materials.**
- **DO NOT grind or sand CARC painted equipment without high-efficiency air purifying respirators in use.**
- **BE AWARE of CARC paint exposure symptoms which can occur a few days after initial exposure. Seek medical help immediately if symptoms are detected.**

WARNING

CARC paint is flammable and can cause injury to death to personnel. Mixing of CARC paint must be done in a well-ventilated mixing room or spraying area away from open flame with personnel wearing eye protection.

WARNING

Skin contact with CARC paint can cause burns. Protective equipment (gloves, goggles, ventilation mask) must be worn when using CARC paint. DO NOT leave any skin exposed.

WARNING SUMMARY (cont)

WARNING

High efficiency air purifying respirators should be used when grinding or sanding CARC painted equipment. Failure to do so may cause injury or death.

WARNING

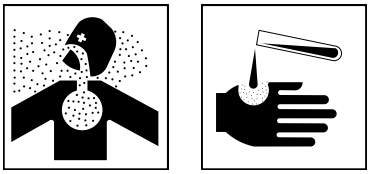

Chemical products, tools, and equipment can be hazardous if not handled safely. Unsafe use of chemical products, tools, and equipment can kill or seriously injure personnel.

Read and follow warnings and instructions on labels of all chemical products. Follow all general shop safety procedures. See unit commander for further instructions on safety.

WARNINGS IN WP PROCEDURES

This list includes all the WARNINGS in the WP procedures. Study these WARNINGS carefully. They can save your life and the lives of soldiers with whom you work.

WARNING

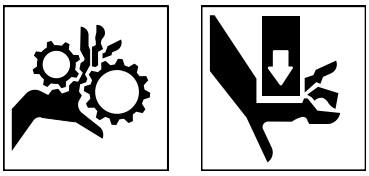

Moving parts of power unit can seriously injure you.

Clear personnel away from power unit before startup. Stay clear of moving parts when power unit is running.

WARNING SUMMARY (cont)

WARNING

Hot parts can burn you.

Allow parts to cool before working on or near them. If necessary, use heat protective gloves to work on hot parts.

WARNING

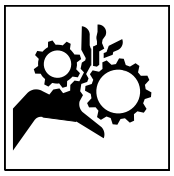

Ensure FUEL SHUT-OFF handle is in OFF position. Engine could start during performance of step 1. Personnel could be injured. Stay clear of possible moving parts.

WARNING

Vehicle may move forward. Personnel may be injured or killed. Keep personnel away from front of vehicle.

WARNING

During turret rotation, damage may occur to the turret/driver's hatch and personnel may be injured or killed. Driver's hatch must be closed.

WARNING SUMMARY (cont)

WARNING

P-D-680 solvent, dry cleaning solvent, benzene (benzol), paint thinner, gasoline, and diesel fuel oil can burn, poison soldiers, and damage equipment.

Use the approved cleaning solvent. Follow the instructions for this section.

WARNING

Solvent fumes and fluid are poisonous and can cause skin irritation.

Solvent may be harmful if swallowed. Avoid skin contact and breathing of fumes. Read solvent warning at the front of this manual.

WARNING

Solvent evaporates rapidly and makes fumes that are flammable.

Do not smoke or allow open flames near solvent fumes.

Read solvent warning at the front of this manual.

WARNING

Failure to set parking brake and block road wheels can allow vehicle to move and could result in injury or death. Always engage parking brake and block road wheels before working on vehicle.

WARNING SUMMARY (cont)

WARNING

Turret can rotate and severely injure or kill you. Do not reach through turret shield opening when turret power is on. Keep turret shield door closed whenever turret drive power is on. Engage turret travel lock before moving or reaching through turret shield opening.

WARNING

Diesel fuel can catch fire and seriously injure or kill soldiers and damage or destroy the vehicle. Wipe up fuel spills immediately. Do not smoke near fuel or when working on the fuel system. Disconnect vehicle ground when working on the fuel system.

WARNING

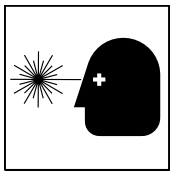

Looking directly at infrared headlights may burn your eyes. Do not look directly into infrared headlights.

WARNING

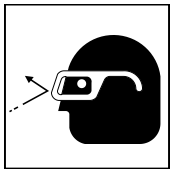

Compressed air can injure you or others.

Do not aim compressed air at yourself or other personnel. Always wear goggles when working with compressed air. Do not use more pressure than 30 psi (207kPa) with air nozzles.

WARNING SUMMARY (cont)

WARNING

Power unit access door could fall and injure you.

Before entering or reaching into engine compartment, make sure that support link is fully engaged on pin.

WARNING

Accidental discharge of fire bottles can seriously injure you.

Deactivate fire suppression system and insert anti-recoil plugs and safety pins before you work near fire bottles.

WARNING

Accidental discharge of fire bottles can seriously injure your eyes or skin.

Wear face shield, ear plugs, protective clothing, and gloves during fire bottle maintenance.

WARNING

Battery posts and power cables can short circuit and burn you.

Remove vehicle ground cable before starting task. Do not touch battery posts with tools or other metal objects. Do not wear jewelry when working with battery or electrical system.

WARNING SUMMARY (cont)

WARNING

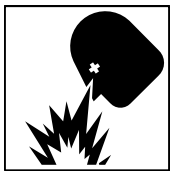

Gas from batteries can explode and injure you.

Use caution when charging or working near batteries. Disconnect battery ground before working in battery compartment. Do not smoke or allow sparks and flame near the batteries.

WARNING

Seat may move suddenly up or down when the control knob is released.

Keep hands away from seat post. Lift your weight off of seat before releasing control knob. Use weight to control movement of seat.

WARNING

Removing lower brake bearing from brake pivot shaft link while parking brake is on can cause shaft link to spring up and injure personnel. Disengage parking brake when doing this task.

WARNING

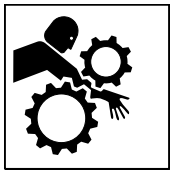

Working between turret and rear engine access panel can be hazardous. Make sure MASTER POWER switch and TURRET POWER switch are OFF. Notify other personnel you are working in this area.

WARNING SUMMARY (cont)

WARNING

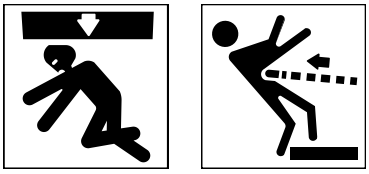

Damaged slings can fail when loaded. Breaking slings can strike and injure personnel. Suspended load can fall and crush personnel.

Inspect all slings before use. Do not use damaged slings. Clearly mark all damaged slings as DAMAGED - DO NOT USE.

WARNING

Hanging loads, heavy parts, and overhead equipment can fall unexpectedly and kill or injure you.

Stay clear of hanging loads, heavy parts, and overhead equipment. Use correct lifting devices. Always have helper guide heavy parts and equipment.

WARNING

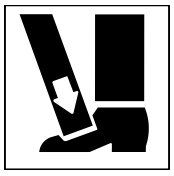

Blocking power plant on unlevel, soft ground can cause power plant to sink and tip over. Personnel can be injured and power plant can be damaged. Make sure to block power plant on flat, hard ground.

WARNING SUMMARY (cont)

WARNING

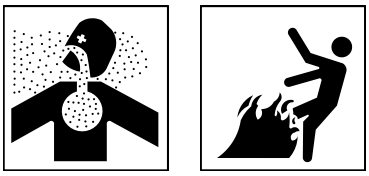

Adhesive, primer, sealant compounds, and isopropyl alcohol are toxic and flammable. These compounds are toxic to eyes, skin, and respiratory tract. Continued exposure can make you dizzy and irritate your eyes and throat.

Always use in well ventilated areas, away from heat, sparks, and flames. Do not breathe fumes. Do not allow into contact with skin and eyes. Use goggles or face shield and protective gloves.

WARNING

Starter weighs 75 lbs (34 kg) and can cause back injury if handled improperly. Be sure to use a hoist or a helper to remove starter.

WARNING

Unexpected and rapid turret movement can kill or seriously injure personnel.

Inform crew before moving turret, and move turret slowly during these procedures.

WARNING

Fuel flowing over a metal surface causes static electricity. This will cause a spark unless the surface is grounded.

WARNING SUMMARY (cont)

WARNING

Sharp edge safety wire can cut your fingers. Make sure to twist end of wire and bend back close to the attaching hole.

WARNING

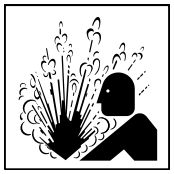

Hot coolant can burn you. Do not remove radiator cap until coolant temperature gauge reads in bottom one-quarter of green zone. Use heat protective mittens to turn radiator cap. Turn cap slowly to release pressure.

WARNING

Radiator is heavy and can cause back injury if handled improperly. Be sure to use a hoist and helper to remove radiator.

WARNING

Generator weighs 80 lb (37kg) and can cause back injury if handled improperly. Be sure to use a hoist or a helper to remove generator.

WARNING SUMMARY (cont)

WARNING

Shorting live electrical circuits with tools or jewelry can seriously burn you.

Ensure MASTER POWER switch is switched to OFF before working on electrical circuits.

WARNING

Shorting live electrical circuits with tools or jewelry can seriously burn you.

Remove vehicle ground cable before working on electrical circuits.

WARNING

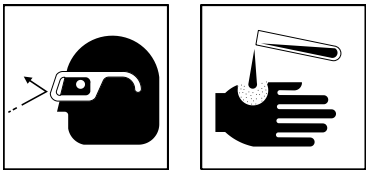

Battery acid can blind or burn you.

Do not get acid on your skin or in your eyes. Wear gloves and goggles when working around batteries. If exposed, flush skin and/or eyes with water immediately.

WARNING

Battery is heavy and can cause back injury if handled improperly. Be sure to have helper assist you to remove and replace battery. Battery weighs about 75 lb (34 kg).

WARNING SUMMARY (cont)

WARNING

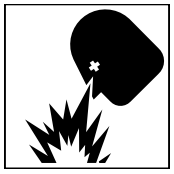

Hydrogen gas from batteries can explode and injure you.

Use caution when you are near batteries. Do not allow sparks and flame near batteries. Do not allow metal objects to contact exposed battery posts or cables.

WARNING

If steering wheel is turned while engine is running at 1000 rpm or greater, the vehicle will pivot and personnel could be killed or equipment damaged.

WARNING

Stop engine before making adjustment. See TM 9-2350-366-10-1.

WARNING

The final drive is heavy and can cause back injury if handled improperly. Be sure to use a hoist or helper to remove final drive.

WARNING SUMMARY (cont)

WARNING

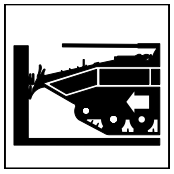

Installation of incorrect final drive may result in injury to personnel or damage to vehicle.

WARNING

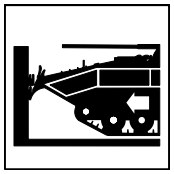

Failure of control linkage can cause vehicle to crash. Crash could kill or injure personnel. Install new cotter pin.

WARNING

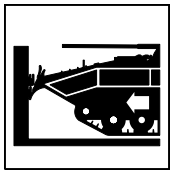

Failure of control linkage can cause vehicle to crash. Crash could kill or injure personnel. Install new cotter pins and key.

WARNING

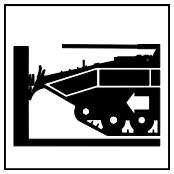

Failure of brake control linkage can cause vehicle to crash. Crash could kill or injure personnel. Adjust service brake control linkage and install new cotter pin.

WARNING SUMMARY (cont)

WARNING

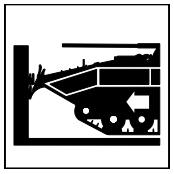

Failure of control linkage can cause carrier to crash. Crash could kill or injure personnel. Install new cotter pins and locknuts.

WARNING

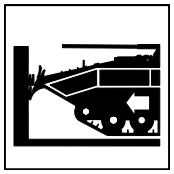

Failure of control linkage can cause vehicle to crash. Crash could kill or injure personnel. Install NEW cotter pins, locknuts, and lockwashers.

WARNING

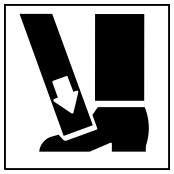

If road wheel lifter slips while lowering road arm, it could injure you. Stand clear before you lower road arm.

WARNING

Failure to set the parking brake and block the road wheels can allow the vehicle to move and could result in injury or death. Always set the parking brake and block road wheels before working on the vehicle.

WARNING SUMMARY (cont)

WARNING

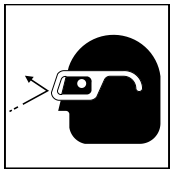

Your eyes can be injured with pressurized water and dirt particles. Wear safety goggles.

WARNING

Before adjusting the track, ensure there are 63 track shoes on the left side track and 64 track shoes on the right side track. Improper number of shoes may prevent the track from being properly adjusted, creating a safety hazard.

WARNING

With the transmission controller in any range except SL and if the locking pin is protruding from the steering wheel housing any amount, the steering wheel will not turn properly and death of personnel or damage of equipment may occur.

WARNING

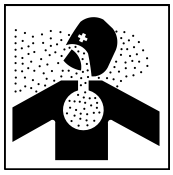

Engine exhaust gas is deadly poison. Make sure the bellows is installed properly in engine compartment panel hole.

WARNING SUMMARY (cont)

WARNING

Outside doors are extremely bulky and require two people to remove safely. Exercise care around door opening to avoid falling or injury.

WARNING

Magnesium may catch on fire if welded on or exposed to high temperatures. Do not weld on magnesium castings or expose them to high temperatures.

WARNING

Fine particles of magnesium can catch fire and burn you. Be very careful when filing or grinding on magnesium. Use grinding equipment marked FOR MAGNESIUM GRINDING ONLY. Keep a Class D fire extinguisher nearby.

WARNING

Water and foam-type fire extinguishers will cause magnesium fires to flare up. Use a Class D fire extinguisher or a sodium chloride base dry powder to fight magnesium fires.

WARNING SUMMARY (cont)

WARNING

Improper disposal of magnesium can cause a fire or explosion. Do not expose magnesium to high temperatures. Let magnesium dry before placing in sealed metal containers. Label containers and ship to a Class 1 hazardous waste disposal site.

WARNING

Fuel fumes can explode and burn you. Before welding check the follow list.

WARNING

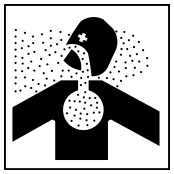

Do not weld on plastic molding material. welding on plastic molding creates toxic fumes. Fumes are hazardous to your health and can result in death.

WARNING

Damaged wire rope can seriously injure you.

Inspect wire rope before handling it. Wear heavy gloves to protect hands from sharp broken wires.

WARNING SUMMARY (cont)

WARNING

Damaged lifting slings can fall with load. Personnel can be injured or killed. Inspect all slings. Do not use damaged slings.

WARNING

Driver's hatch cover could fall during vehicle operation because of worn or excessively soiled components and/or maladjustment, causing injury or death. Follow these inspection procedures very carefully.

WARNING

A falling hatch is heavy and could kill you or your buddy. Equipment could also be damaged. Make sure all personnel are clear before performing the next step.

WARNING

The yoke support assembly could fail to operate if the hatch release handle gets caught on the ledge directly behind it. Watch for this any time the hatch release handle is operated.

WARNING SUMMARY (cont)

WARNING

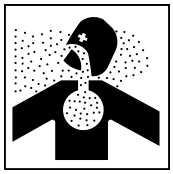

The OBD insulator blanket is made out of asbestos. Handle with care. Discard insulator blanket properly as a hazardous material per local standard operating procedure. The insulator washer takes the place of the blanket.

WARNING

Exhaust fumes can poison you if wrong heater is installed. Do not interchange "common air" heater for a "dual air" heater.

WARNING

You could be injured if cylinder discharges when it is out of its mounting brackets or is dropped. Discharge cylinder completely before removing from its mount. Handle with great care.

FIRST AID

For first aid information, see FM 21-11.

INSERT LATEST UPDATED PAGES / WORK PACKAGES. DESTROY SUPERSEDED DATA.

LIST OF EFFECTIVE PAGES / WORK PACKAGES

NOTE: Updates to all portions of this TM are indicated by a vertical bar in the outer margin of the page.

Dates of issue for original and updated pages / work packages are:

Original 0 (26 July 2001)

TOTAL NUMBER OF PAGES FOR FRONT AND REAR MATTER IS 95 AND TOTAL NUMBER OF WORK PACKAGES IS 194 CONSISTING OF THE FOLLOWING:

Page / WP No.	* Change No.	Page / WP No.	* Change No.	Page / WP No.	* Change No.
Title	0				
a – w/x blank	0				
A/B	0				
i – xxi/xxii blank	0				
WP 0001 00 – 0194-00	0				
1 – 41/42 blank	0				
DA 2028 (3 copies)	0				
Authentication	0				
Metric Chart	0				
Back Cover	0				

***** Zero in this column indicates an original page or work package.

HEADQUARTERS
DEPARTMENT OF THE ARMY
WASHINGTON, D.C., 26 JULY 2001

TECHNICAL MANUAL

UNIT MAINTENANCE MANUAL

OPPOSING FORCES SURROGATE VEHICLE (OSV)M113A3/BMP-2
NSN 6920-01-420-4716
(EIC AUK)
HULL

REPORTING ERRORS AND RECOMMENDING IMPROVEMENTS

You can help improve this publication. If you find any mistakes or if you know of a way to improve the procedures, please let us know. Submit your DA Form 2028 (Recommended Changes to Publications and Blank Forms), through the Internet, on the Army Electronic Product Support (AEPS) website. The Internet address is http://aeps.ria.army.mil. If you need a password, scroll down and click on "ACCESS REQUEST FORM". The DA Form 2028 is located in the ONLINE FORMS PROCESSING section of the AEPS. Fill out the form and click on SUBMIT. Using this form on the AEPS will enable us to respond quicker to your comments and better manage the DA Form 2028 program. You may also mail, fax, or E-mail your letter or DA Form 2028 directly to: AMSTA-LC-CI/TECH PUBS, TACOM-RI, 1 Rock Island Arsenal, Rock Island, IL 61299-7630. The E-mail address is TACOM-TECH-PUBS@ria.army.mil. The fax number is DSN 793-0726 or Commercial (309) 782-0726.

DISTRIBUTION STATEMENT A — Approved for public release; distribution is unlimited.

TABLE OF CONTENTS

WP Sequence No.

Volume 1

WARNING SUMMARY

HOW TO USE THIS MANUAL

CHAPTER 1 — UNIT INTRODUCTORY INFORMATION WITH THEORY OF OPERATION

GENERAL INFORMATION....0001 00
EQUIPMENT DESCRIPTION AND DATA....0002 00
THEORY OF OPERATION....0003 00
REPAIR PARTS, SPECIAL TOOLS, TMDE, AND SUPPORT EQUIPMENT....0004 00

CHAPTER 2 — UNIT TROUBLESHOOTING PROCEDURES

INTRODUCTION TO TROUBLESHOOTING....0005 00
MALFUNCTION/SYMPTOM INDEX WP....0006 00
ENGINE OVERHEATS....0007 00

TABLE OF CONTENTS (cont)

WP Sequence No.

ENGINE DOESN'T CRANK....0008 00
ENGINE DOES NOT START (COLD WEATHER ONLY)....0009 00
WAIT INDICATOR FLASHES DURING START ATTEMPTS (PREGLOW OR AFTERGLOW)....0010 00
WAIT INDICATOR LIGHT DOESN'T LIGHT....0011 00
ENGINE CRANKS SLOWLY....0012 00
ENGINE CRANKS BUT WILL NOT START....0013 00
ENGINE CRANKS BUT WON'T START BELOW 40°F (GLOW PLUGS ARE USED)....0014 00
ENGINE RUNS ROUGH, STALLS, OR DOES NOT PUT OUT FULL POWER....0015 00
GENERATOR MALFUNCTIONS AS INDICATED BY BATTERY/GENERATOR INDICATOR....0016 00
ENGINE OIL LOW PRESSURE INDICATOR COMES ON....0017 00
ENGINE OPERATES AT LESS THAN NORMAL TEMPERATURE....0018 00
ENGINE CHARGING SYSTEM SCHEMATIC....0019 00
ENGINE FUEL SYSTEM SCHEMATIC....0020 00
ENGINE STARTER CIRCUIT SCHEMATIC....0021 00
NO POWER TO TURRET....0022 00
NO EXTERIOR LIGHTS OPERATE....0023 00
BLACKOUT DRIVE LIGHT DOES NOT WORK....0024 00
SERVICE HEADLIGHTS DO NOT WORK....0025 00
SERVICE AND/OR BLACKOUT STOP LIGHTS MALFUNCTION....0026 00
BLACKOUT MARKER LIGHTS DO NOT WORK....0027 00
SERVICE TAILLIGHT(S) DO NOT WORK....0028 00
HORN DOES NOT WORK....0029 00
INSTRUMENT PANEL AND/OR TRANS CONTROLLER ILLUMINATION LIGHTS MALFUNCTION....0030 00
DOME LIGHT(S) DO NOT WORK....0031 00
ELECTRICAL INSTALLATION WIRING DIAGRAM....0032 00
MASTER SWITCH ON INDICATOR DOES NOT LIGHT....0033 00
FUEL LEVEL INDICATOR MALFUNCTIONS....0034 00
HIGH BEAM INDICATOR LIGHT DOES NOT WORK....0035 00
BATTERY/GENERATOR INDICATOR MALFUNCTIONS....0036 00
PARKING BRAKE INDICATOR MALFUNCTIONS....0037 00
COOLANT TEMP INDICATOR MALFUNCTIONS....0038 00
STEERING LOCKED INDICATOR MALFUNCTIONS....0039 00
ENGINE OIL LOW PRESSURE INDICATOR MALFUNCTIONS....0040 00
TRANSMISSION OIL LOW PRESSURE INDICATOR MALFUNCTIONS....0041 00
TRANS OIL HI TEMP INDICATOR MALFUNCTIONS....0042 00
ENGINE COOLANT LOW LEVEL INDICATOR MALFUNCTIONS....0043 00
TRANS FILTER CLOGGED INDICATOR MALFUNCTIONS....0044 00
INDICATORS SCHEMATIC....0045 00
DRIVER'S VENTILATION FAN DOES NOT BLOW AIR....0046 00

TABLE OF CONTENTS (cont)

WP Sequence No.

CREW VENTILATION FAN DOES NOT BLOW AIR....0047 00
VENTILATION FAN SCHEMATIC....0048 00
VEHICLE MOVES WITH TRANSMISSION IN SL....0049 00
VEHICLE DOES NOT MOVE IN ANY SHIFT LEVER POSITION....0050 00
VEHICLE DRIFTS OR DOES NOT STEER....0051 00
SERVICE AND/OR PARKING BRAKE WILL NOT HOLD VEHICLE....0052 00
TRANSMISSION WILL NOT UPSHIFT OR SHIFTS ERRATICALLY IN 1-4 POSITION....0053 00
TRANSMISSION DOES NOT DOWNSHIFT IN 1-4 POSITION....0054 00
TRANSMISSION DOES NOT HOLD 1ST POSITION....0055 00
TRANSMISSION DOES NOT HOLD 2ND POSITION....0056 00
TRANSMISSION DOES NOT HOLD 3RD POSITION....0057 00
TRANSMISSION DOES NOT REVERSE....0058 00
TRANSMISSION DOES NOT PIVOT STEER....0059 00
TRANSMISSION HIGH TEMP INDICATOR COMES ON....0060 00
TRANSMISSION OIL LOW PRESSURE INDICATOR COMES ON....0061 00
TRANSMISSION SYSTEM SCHEMATIC....0062 00
STEERING LOCK MALFUNCTIONS....0063 00
STEERING LOCK SCHEMATIC....0064 00
BILGE PUMP AND/OR LIGHT DON'T WORK....0065 00
BILGE PUMP SCHEMATIC....0066 00
PERSONNEL HEATER MALFUNCTIONS....0067 00
PERSONNEL HEATER SCHEMATIC....0068 00
SPEEDOMETER MALFUNCTIONS....0069 00
TACHOMETER MALFUNCTIONS....0070 00
HOOK UP/REMOVE STE/ICE TEST SET TO DCA 6....0071 00
STE/ICE TEST 10 ENGINE RPM....0072 00
STE/ICE TEST 24 FUEL SUPPLY PRESSURE....0073 00
STE/ICE TEST 25 FUEL RETURN PRESSURE....0074 00
STE/ICE TEST 32 AIR BOX PRESSURE....0075 00
STE/ICE TEST 67 BATTERY VOLTAGE....0076 00
STE/ICE TEST 68 STARTER MOTOR VOLTAGE....0077 00
STE/ICE TEST 69 STARTER NEGATIVE CABLE VOLTAGE DROP....0078 00
STE/ICE TEST 70 STARTER SOLENOID VOLTAGE....0079 00
STE/ICE TEST 71 STARTER CURRENT (AVERAGE)....0080 00
STE/ICE TEST 72 STARTER CURRENT (FIRST PEAK)....0081 00
STE/ICE TEST 73 BATTERY RESISTANCE AND STE/ICE TEST 75 BATTERY RESISTANCE CHANGE (PACK)....0082 00
STE/ICE TEST 74 STARTER CIRCUIT RESISTANCE....0083 00
STE/ICE TEST 80 BATTERY CURRENT....0084 00
STE/ICE TEST 82 GENERATOR OUTPUT VOLTAGE....0085 00

TABLE OF CONTENTS (cont)

WP Sequence No.

STE/ICE TEST 83 GENERATOR FIELD VOLTAGE....0086 00
STE/ICE TEST 84 GENERATOR NEGATIVE CABLE VOLTAGE DROP....0087 00
STE/ICE BLANK DISPLAY DIAGNOSTIC TROUBLESHOOTING....0088 00
STE/ICE CONFIDENCE TEST DIAGNOSTIC TROUBLESHOOTING....0089 00
STE/ICE TEST 10, 12 AND 13 DIAGNOSTIC TROUBLESHOOTING....0090 00
DCA BATTERY VOLTAGE DIAGNOSTIC TROUBLESHOOTING....0091 00
DCA CURRENT SHUNT DIAGNOSTIC TROUBLESHOOTING....0092 00
STE/ICE TEST 24 FUEL SUPPLY PRESSURE DIAGNOSTIC TROUBLESHOOTING....0093 00
STE/ICE TEST 25 FUEL RETURN PRESSURE DIAGNOSTIC TROUBLESHOOTING....0094 00
STE/ICE TEST 32 AIR BOX PRESSURE DIAGNOSTIC TROUBLESHOOTING....0095 00
STE/ICE TEST 68 STARTER MOTOR VOLTAGE DIAGNOSTIC TROUBLESHOOTING....0096 00
STE/ICE TEST 69 STARTER NEGATIVE CABLE VOLTAGE DROP DIAGNOSTIC TROUBLESHOOTING....0097 00
STE/ICE TEST 70 STARTER SOLENOID VOLTAGE DIAGNOSTIC TROUBLESHOOTING....0098 00
STE/ICE TEST 82 GENERATOR OUTPUT VOLTAGE DIAGNOSTIC TROUBLESHOOTING....0099 00
STE/ICE TEST 83 GENERATOR FIELD VOLTAGE DIAGNOSTIC TROUBLESHOOTING....0100 00
STE/ICE TEST 84 GENERATOR NEGATIVE CABLE VOLTAGE DROP DIAGNOSTIC TROUBLESHOOTING....0101 00
STE/ICE SCHEMATIC....0102 00

CHAPTER 3 — UNIT MAINTENANCE INSTRUCTIONS FOR VEHICLE HULL — GENERAL

SERVICE UPON RECEIPT....0103 00
PREVENTIVE MAINTENANCE CHECKS AND SERVICES....0104 00
REPLACE DATAPLATES, STENCILS, MARKERS, AND DECALS....0105 00

CHAPTER 4 — UNIT MAINTENANCE INSTRUCTIONS FOR ENGINE

REMOVE/INSTALL POWER PLANT ASSEMBLY....0106 00
BLOCK POWER PLANT....0107 00
REPLACE ENGINE MOUNTS....0108 00
REPLACE LEFT AIR BOX DRAIN CHECK VALVE AND TUBES....0109 00
REPLACE RIGHT AIR BOX DRAIN CHECK VALVE AND TUBES....0110 00
REPLACE ENGINE LIFTING BRACKET....0111 00
REPLACE ENGINE OIL FILLER CAP....0112 00
REPLACE ENGINE OIL SAMPLING VALVE AND HOSE....0113 00
REPLACE OIL GAUGE ROD AND TUBE....0114 00
REPLACE STARTER....0115 00

CHAPTER 5 — UNIT MAINTENANCE INSTRUCTIONS FOR FUEL SYSTEM

REPLACE ENGINE FUEL PUMP....0116 00

TABLE OF CONTENTS (cont)

WP Sequence No.

REPLACE FUEL SUPPLY PRESSURE TRANSDUCER....0117 00
REPLACE FUEL RETURN PRESSURE TRANSDUCER....0118 00
REPLACE TURBO OUTLET PRESSURE TRANSDUCER....0119 00
REPLACE AIR BOX PRESSURE TRANSDUCER....0120 00
REPLACE FUEL FILTER DIFFERENTIAL PRESSURE SWITCH....0121 00
REPLACE AUXILIARY TANK FLUID LEVEL DETECTOR....0122 00
DRAIN TANKS....0123 00
REPLACE FUEL QUANTITY TRANSMITTER....0124 00
REPLACE FUEL SELECT SWITCH TO GAUGE LEAD....0125 00
REPLACE GLOW PLUG HARNESS AND GLOW PLUGS....0126 00
REPLACE GLOW PLUG CONTROLLER....0127 00
REPLACE GLOW PLUG POWER HARNESS....0128 00
REPLACE GLOW PLUG CONTROLLER MOUNTING BRACKET....0129 00
REPLACE ENGINE FUEL SUPPLY HOSE....0130 00
REPLACE ENGINE FUEL RETURN HOSE....0131 00
REPLACE PRIMARY AND SECONDARY FUEL FILTERS AND BRACKET....0132 00
REPLACE PRIMARY AND SECONDARY FUEL FILTER ELEMENTS....0133 00
REPLACE FUEL SUPPLY PRESSURE TRANSDUCER....0134 00
REPLACE FUEL RETURN PRESSURE TRANSDUCER....0135 00
REPLACE FUEL FILTER DIFFERENTIAL PRESSURE SWITCH....0136 00
REPLACE GOVERNOR ASSEMBLY....0137 00

CHAPTER 6 — UNIT MAINTENANCE INSTRUCTIONS FOR AIR CLEANER
SERVICE AIR CLEANER FILTER ELEMENT....0138 00
REPLACE AIR CLEANER AND ELBOW....0139 00
REPAIR AIR CLEANER ASSEMBLY....0140 00
REPAIR AIR CLEANER RETAINER....0141 00
REPLACE AIR CLEANER RESTRICTION INDICATOR....0142 00
REPLACE AIR CLEANER RESTRICTION INDICATOR HOSE....0143 00
REMOVE/INSTALL AIR INTAKE ELBOW....0144 00
REPLACE GRILL AIR INTAKE ELBOW AND HOSE....0145 00
REPLACE EXHAUST EVACUATOR VALVE AND CONNECTOR....0146 00
ADJUST VENTILATING FAN DRIVE BELT....0147 00
REPLACE VENTILATING FAN DRIVE BELT....0148 00

CHAPTER 7 — UNIT MAINTENANCE INSTRUCTIONS FOR EXHAUST SYSTEM
REPLACE ENGINE EXHAUST ELBOWS AND DOUBLE FLEX JOINT....0149 00
REPAIR DOUBLE FLEX EXHAUST JOINT....0150 00
REPLACE MUFFLER EXTENSION AND CAP....0151 00
REPLACE EXHAUST MUFFLER AND BRACKET....0152 00
REPLACE ENGINE LEFT/RIGHT EXHAUST ELBOWS....0153 00
REPLACE LEFT/RIGHT TURBO EXHAUST PIPE HEAT SHIELD....0154 00

TABLE OF CONTENTS (cont)

WP Sequence No.

CHAPTER 8 — UNIT MAINTENANCE INSTRUCTIONS FOR RADIATOR AND EXPANSION TANK
DRAIN AND FILL COOLING SYSTEM....0155 00
CLEAN RADIATOR....0156 00
REPLACE RADIATOR AND PARTS....0157 00
REPLACE AUXILIARY TANK....0158 00

CHAPTER 9 — UNIT MAINTENANCE INSTRUCTIONS FOR HEADERS/THERMOSTATS/ HOUSINGS
REPLACE THERMOSTATIC FAN SPEED SWITCH....0159 00
REPLACE UPPER COOLANT HOSE AND TUBE....0160 00
REPLACE RADIATOR OUTLET TUBE AND HOSE....0161 00
REPLACE BALANCE HOSE....0162 00
REPLACE DRAIN COCK AND HOSE....0163 00
REPLACE COOLANT AIR SEPARATOR....0164 00
REPLACE THERMOSTAT/COVER....0165 00
REPLACE THERMOSTAT TUBE/HOSES....0166 00

CHAPTER 10 — UNIT MAINTENANCE INSTRUCTIONS FOR WATER PUMP
ADJUST COOLANT PUMP BELTS....0167 00
REPLACE COOLANT PUMP IDLER PULLEY/BELTS....0168 00
REPLACE ENGINE COOLANT PUMP....0169 00

CHAPTER 11 — UNIT MAINTENANCE INSTRUCTIONS FOR GENERATOR
REPLACE GENERATOR TURNBUCKLE PARTS....0170 00
REPLACE GENERATOR/BRACKET....0171 00
ADJUST GENERATOR DRIVE BELT....0172 00
REPLACE GENERATOR DRIVE BELT....0173 00
REPLACE FLAT PULLEYS AND BEARINGS....0174 00
REPLACE IDLER ARM AND SPRING TENSIONER....0175 00
ADJUST VOLTAGE REGULATOR....0176 00
REPLACE REGULATOR ASSEMBLY....0177 00
REPLACE FAN AND GENERATOR VARIABLE SPEED DRIVE....0178 00

CHAPTER 12 — UNIT MAINTENANCE INSTRUCTIONS FOR WIRING HARNESSES
REMOVE/REPLACE WIRING HARNESS 1W13 (CIRCUIT BREAKER TO FAN SWITCH)....0179 00
REMOVE/REPLACE WIRING HARNESS 1W19 (DRIVER'S FAN TO INSTRUMENT PANEL)....0180 00
REMOVE/REPLACE WIRING HARNESS 1W3, TURRET POWER....0181 00
REMOVE/REPLACE CABLE ASSEMBLY 1W2, SPECIAL PURPOSE....0182 00
REMOVE/REPLACE WIRING HARNESS 1W1, DRIVERS COMMUNICATION BOX....0183 00
REPLACE WARNING PANEL WIRING HARNESS....0184 00
REPLACE RIGHT HEADLIGHT VEHICLE WIRING HARNESS....0185 00

TABLE OF CONTENTS (cont)

WP Sequence No.

REMOVE/REPLACE WIRING HARNESS 1W5 OR 1W6, HEADLIGHT EXTENSION 0186 00
REPLACE REAR MAIN WIRING HARNESS 1W4 ..... 0187 00
REPLACE TRANSMISSION CONTROLLER WIRING HARNESS 0188 00
REPAIR WIRING HARNESS 0189 00
REPLACE TRANSMISSION WIRING HARNESS 0190 00
REPLACE ENGINE WIRING HARNESS 0191 00

CHAPTER 13 — UNIT MAINTENANCE INSTRUCTIONS FOR DISTRIBUTION BOX
REPLACE MASTER SWITCH TO DISTRIBUTION BOX LEAD (CIRCUIT 49) 0192 00
REPAIR DISTRIBUTION BOX 0193 00
REPLACE DISTRIBUTION BOX ASSEMBLY 0194 00

Volume 2

CHAPTER 14 — UNIT MAINTENANCE INSTRUCTIONS FOR GAUGES
SERVICE SPEEDOMETER/TACHOMETER CABLE FLEXIBLE CORE 0195 00
REPLACE SPEEDOMETER 0196 00
REPLACE SPEEDOMETER CABLE AND ADAPTER 0197 00
REPAIR SPEEDOMETER CABLE 0198 00
REPLACE TACHOMETER 0199 00
REPLACE TACHOMETER ENGINE ADAPTER 0200 00
REPLACE TACHOMETER CABLE 0201 00
REPAIR TACHOMETER CABLE 0202 00
REPLACE DRIVER'S LEVEL INDICATOR AND MOUNT PLATE 0203 00

CHAPTER 15 — UNIT MAINTENANCE INSTRUCTIONS FOR INSTRUMENT AND WARNING INDICATORS
REPLACE ENGINE OIL LOW PRESSURE TRANSMITTER AND HARDWARE 0204 00
REPLACE COOLANT TEMPERATURE TRANSMITTER 0205 00
REPLACE TRANSMISSION OIL HIGH TEMPERATURE SWITCH 0206 00
REPLACE HOSES FROM THERMOSTAT TO VARIABLE SPEED DRIVE 0207 00
REPLACE TRANSMISSION OIL SUPPLY AND RETURN HOSES 0208 00
REPLACE TURBO OUTLET PRESSURE TRANSDUCER 0209 00
REPLACE AIR BOX PRESSURE TRANSDUCER 0210 00
REPLACE INSTRUMENT PANEL MOUNTS AND GROUND LEAD 0211 00
REPLACE WARNING PANEL LIGHTS 0212 00
REPLACE WARNING LIGHT PANEL 0213 00
REPLACE WARNING LIGHT PANEL ASSEMBLY 0214 00
REPLACE INSTRUMENT PANEL SPECIAL PURPOSE CABLE 0215 00
REPLACE INSTRUMENT PANEL BATTERY-GENERATOR GAUGE WIRING HARNESS 0216 00
REPLACE INSTRUMENT WARNING LIGHT PANEL 0217 00
REPLACE INSTRUMENT PANEL WARNING LIGHTS 0218 00

TABLE OF CONTENTS (cont)

WP Sequence No.

REPLACE PANEL LIGHTS AND INDICATOR LIGHTS....0219 00
REPLACE INSTRUMENT PANEL ASSEMBLY....0220 00
REPLACE INSTRUMENT PANEL GAUGES....0221 00

CHAPTER 16 — UNIT MAINTENANCE INSTRUCTIONS FOR VEHICLE LIGHTS
REPAIR DOME LIGHT....0222 00
REPLACE DOME LIGHT LENS....0223 00
REPLACE REAR DOME LIGHT SWITCH AND CIRCUIT BREAKER....0224 00
REPLACE DOMELIGHT INTERLOCK SWITCH....0225 00
REPAIR BLACKOUT MARKER LIGHT....0226 00
REPLACE BLACKOUT MARKER LIGHT....0227 00
REPAIR BLACKOUT HEADLIGHT....0228 00
REPLACE BLACKOUT HEADLIGHT....0229 00
REPAIR SERVICE HEADLIGHTS....0230 00
REPLACE SERVICE HEADLIGHTS....0231 00
REPLACE STOP LIGHT-TAIL LIGHT AND GUARDS....0232 00
REPAIR LEFT STOP LIGHT-TAIL LIGHT....0233 00
REPAIR RIGHT STOP LIGHT-TAIL LIGHT....0234 00
REPLACE HEADLIGHT HIGH BEAM SELECTOR SWITCH....0235 00
REPLACE DOME LIGHT....0236 00

CHAPTER 17 — UNIT MAINTENANCE INSTRUCTIONS FOR BATTERIES
DISCONNECT/CONNECT BATTERY GROUND STRAP....0237 00
REPLACE BATTERY LEADS AND TERMINALS....0238 00
REPLACE BATTERIES AND RETAINERS....0239 00
REPAIR BATTERY BOX....0240 00
REPLACE BATTERY TO MASTER SWITCH LEAD (CIRCUIT 6)....0241 00

CHAPTER 18 — UNIT MAINTENANCE INSTRUCTIONS FOR AUXILIARY POWER
REPLACE AUXILIARY POWER (SLAVE) RECEPTACLE....0242 00
REPLACE AUXILIARY POWER (SLAVE) RECEPTACLE GROUND LEAD....0243 00
REPLACE MASTER SWITCH TO AUXILIARY POWER RECEPTACLE LEAD (CIRCUIT 50)....0244 00

CHAPTER 19 — UNIT MAINTENANCE INSTRUCTIONS FOR SWITCHES
REPLACE MASTER SWITCH....0245 00
REPLACE MASTER SWITCH PANEL ASSEMBLY....0246 00
REPLACE INSTRUMENT PANEL ON-OFF SWITCHES....0247 00
REPLACE MAIN LIGHT SWITCH....0248 00
REPLACE ENGINE START SWITCH....0249 00
REPLACE HORN SWITCH....0250 00
REPLACE CREW FAN SWITCH AND CIRCUIT BREAKER....0251 00
REMOVE/REPLACE DRIVER'S HATCH SWITCH 1S9....0252 00

TABLE OF CONTENTS (cont)

WP Sequence No.

REMOVE/REPLACE DRIVER'S HATCH SWITCH 1S6....0253 00
REPLACE TRANSMISSION OIL HIGH TEMPERATURE SWITCH....0254 00
REPLACE GENERATOR FIELD PRESSURE SWITCH....0255 00
REPLACE STARTER RELAY SWITCH....0256 00
REPLACE CIRCUIT BREAKER....0257 00
REPLACE BILGE PUMP CIRCUIT BREAKER....0258 00

CHAPTER 20 — UNIT MAINTENANCE INSTRUCTIONS FOR VENTILATING FANS
REMOVE/INSTALL CREW VENTILATION FAN ASSEMBLY....0259 00
REMOVE/REPLACE DRIVER'S VENTILATION FAN ASSEMBLY MOUNTING BRACKET AND HARDWARE....0260 00
REMOVE/INSTALL EXTERNAL FRESH AIR DUCT ASSEMBLY....0261 00
REMOVE/INSTALL CREW INTERNAL FRESH AIR DUCT ASSEMBLY....0262 00
REMOVE/INSTALL EXTERNAL FRESH AIR SYSTEM FILTER....0263 00

CHAPTER 21 — UNIT MAINTENANCE INSTRUCTIONS FOR TRANSMISSION
REPLACE TRANSMISSION OIL DRAIN TUBES AND BRACKET....0264 00
REPLACE TRANSMISSION MOUNTS....026500
REPLACE TRANSMISSION RANGE CONTROLLER/BRACKET....0266 00

CHAPTER 22 — UNIT MAINTENANCE INSTRUCTIONS FOR TRANSFER AND FINAL DRIVES
OPERATIONAL CHECK/ADJUST TRANSMISSION STEERING....0267 00
REPLACE TRANSMISSION OIL LEVEL DIPSTICK, TUBE, AND ADAPTER....0268 00
REPLACE TRANSMISSION OIL AND OIL FILTER ELEMENT....0269 00
REPLACE TRANSMISSION OIL COOLER HOSES, FITTINGS, AND MOUNTING....0270 00
REPLACE TRANSMISSION OIL SAMPLING VALVE AND PRESSURE SWITCH....0271 00
REPLACE DIFFERENTIAL PRESSURE SWITCH AND BYPASS PLUG....0272 00
REPLACE FINAL DRIVE FILLER TUBE AND DIPSTICK....0273 00
REPLACE FINAL DRIVE....0274 00
REPLACE FINAL DRIVE DIFFERENTIAL OIL SEAL....027500
REPLACE PROPELLER SHAFT AND UNIVERSAL JOINTS....0276 00

CHAPTER 23 — UNIT MAINTENANCE INSTRUCTIONS FOR BRAKES
ADJUST PARKING BRAKE....0277 00
ADJUST SERVICE BRAKE CONTROL LINKAGE....0278 00
ADJUST TRANSMISSION BRAKES....0279 00
CHECK TRANSMISSION BRAKE ADJUSTMENT....0280 00
REPLACE PARKING BRAKE CONTROL LEVER ASSEMBLY....0281 00
REPLACE SERVICE BRAKE CONTROL LINKAGE....0282 00
REPLACE PARKING BRAKE CONTROL CABLE ASSEMBLY....0283 00
REPLACE UPPER AND LOWER SERVICE BRAKE PEDAL....0284 00
REPLACE STOP SWITCH....0285 00

TABLE OF CONTENTS (cont)

WP Sequence No.

REPLACE PARKING BRAKE SWITCH/BRACKET....0286 00

CHAPTER 24 — UNIT MAINTENANCE INSTRUCTIONS FOR SUSPENSION
REPLACE TORSION BAR....0287 00
REPLACE TORSION BAR ANCHOR....0288 00
REPLACE ROAD WHEEL SUPPORT ARM, BEARINGS, AND SEALS....0289 00
REPLACE ROAD WHEEL HUB....0290 00
REPLACE ROAD WHEEL....0291 00
REPLACE IDLER WHEEL....0292 00

CHAPTER 25 — UNIT MAINTENANCE INSTRUCTIONS FOR TRACK IDLERS, DRIVE SPROCKETS, AND TRACKS
REPLACE IDLER WHEEL ARM ASSEMBLY....0293 00
REPLACE IDLER WHEEL ARM BEARINGS AND SEALS....0294 00
REPLACE TRACK TENSION ADJUSTER AND MOUNT....0295 00
REPLACE DRIVE SPROCKET AND CARRIER ASSEMBLY....0296 00
REPAIR DRIVE SPROCKET CARRIER ASSEMBLY....0297 00
REPLACE TRACK....0298 00
REPLACE TRACK SHOE ASSEMBLY....0299 00
REPLACE TRACK SHOE PAD....0300 00

CHAPTER 26 — UNIT MAINTENANCE INSTRUCTIONS FOR STEERING
REPLACE PUSH-PULL CONTROL ASSEMBLY, BRACKET, LINKS, AND PINS....0301 00
ADJUST STEERING WHEEL LINKAGE....0302 00
REPLACE STEERING LOCK SWITCH....0303 00
REPLACE STEERING SUPPORT, BRACKETS, AND SHAFT....0304 00
REPLACE QUICK-RELEASE PIN AND LANYARD....0305 00
REPLACE STEERING WHEEL LINKAGE....0306 00

CHAPTER 27 — UNIT MAINTENANCE INSTRUCTIONS FOR HULL ACCESS COVERS AND DOORS
REMOVE/REPLACE VISMOD ACCESS DOORS....0307 00
REMOVE/REPLACE ENGINE ACCESS COVER PLATE....0308 00
REPAIR/REPLACE POWER PLANT REAR ACCESS PANELS....0309 00
REMOVE/INSTALL FAN DRIVE PULLEY ACCESS COVER....0310 00
REPLACE RADIATOR ACCESS DOOR....0311 00
REPLACE DRIVER'S POWER PLANT ACCESS PANEL....0312 00
REMOVE/INSTALL HULL NOSE ASSEMBLY....0313 00
REMOVE/REPLACE VISMOD PANEL, LEFT AND RIGHT SIDE....0314 00
REPLACE HULL FRONT ACCESS COVER....0315 00
REPLACE POWER PLANT BOTTOM ACCESS COVER....0316 00

CHAPTER 28 — UNIT MAINTENANCE INSTRUCTIONS FOR HULL ASSEMBLIES
REPAIR HULL BY WELDING....0317 00

TABLE OF CONTENTS (cont)

WP Sequence No.

REPLACE HORN AND GROUND LEAD....0318 00
REPLACE UTILITY OUTLET RECEPTACLE....0319 00
REPLACE POWER PLANT GRILL SCREEN....0320 00
REMOVE/REPLACE ENGINE ACCESS COVER PLATE SEAL....0321 00
REPLACE TOWING HOOK AND EYE....0322 00
REPLACE REAR TIEDOWN PLATES....032300
REPLACE LIFTING EYE....0324 00
REPLACE HEADLIGHT GUARD....0325 00
REMOVE/REPLACE REAR DOOR CATCH HOOKS....0326 00
REMOVE/REPLACE REAR DOOR BUMPER....0327 00
REMOVE/REPLACE RIGHT REAR DOOR HANDLES, HINGES, LATCHES, AND CHAIN....0328 00
REPLACE REAR DOORS, HINGES, AND GASKETS....0329 00
REPLACE LEFT REAR DOOR INSIDE HINGES AND LATCH....0330 00
ADJUST TOW START CONTROL CABLE ASSEMBLY....0331 00
REPLACE TOW START CONTROL ASSEMBLY AND BEARING....0332 00
REPLACE TOW START CONTROL ASSEMBLY COVER....0333 00

CHAPTER 29 — UNIT MAINTENANCE INSTRUCTIONS FOR HULL DRAIN PLUGS
REPLACE HULL DRAIN PLUGS....0334 00

CHAPTER 30 — UNIT MAINTENANCE INSTRUCTIONS FOR POWER PLANT GRILL
REMOVE/INSTALL POWER PLANT GRILLE....0335 00
INSPECT POWER PLANT SLING....0336 00

CHAPTER 31 — UNIT MAINTENANCE INSTRUCTIONS FOR DRIVER'S HATCH AND FLOOR PLATES
REPLACE DRIVER'S HATCH CUSHION PAD....0337 00
REPLACE DRIVER'S HATCH INTERIOR LOCK AND LATCH....0338 00
REPLACE VEHICLE PERISCOPE LOCKS AND SEALS....0339 00
REPAIR DRIVER'S HATCH....0340 00
REPLACE REAR COMPARTMENT AIR VENTILATOR....0341 00
REPLACE DRIVER'S COMPARTMENT FLOOR PLATES....0342 00
REPLACE FLOOR PLATES/RUBBER STRIPS....0343 00

CHAPTER 32 — UNIT MAINTENANCE INSTRUCTIONS FOR TURRET SHIELD
REPAIR TURRET SHIELD DOOR LATCH ASSEMBLY....0344 00
REPLACE TURRET SHIELD DOOR....0345 00
REPLACE TURRET SHIELD DOOR LOWER TRACKS....0346 00
REPLACE TURRET SHIELD DOOR UPPER TRACK (EAK)....0347 00
REPLACE TURRET SHIELD DOOR LATCH STRIKE....0348 00
REPLACE TURRET SHIELD DOOR SWITCH ASSEMBLY....0349 00
REPLACE RIGHT TURRET SHIELD PANEL....0350 00

TABLE OF CONTENTS (cont)

WP Sequence No.

REPLACE LEFT TURRET SHIELD PANEL....0351 00

CHAPTER 33 — UNIT MAINTENANCE INSTRUCTIONS FOR SHOCK ABSORBERS
REPLACE SHOCK ABSORBER....0352 00
REPLACE SHOCK ABSORBER MOUNT....0353 00
REPLACE SHOCK ABSORBER PIN....0354 00

CHAPTER 34 — UNIT MAINTENANCE INSTRUCTIONS FOR BILGE PUMPS
REPLACE FRONT BILGE PUMP PIPES....0355 00
REPLACE FRONT BILGE PUMP AND STRAINER....0356 00
REPLACE FRONT BILGE VALVE....0357 00

CHAPTER 35 — UNIT MAINTENANCE INSTRUCTIONS FOR SEATS
REPLACE PERSONNEL SEATS, BACKRESTS, CUSHIONS, AND BELTS....0358 00
REPLACE DRIVER'S SEAT ASSEMBLY....0359 00
REPAIR DRIVER'S SEAT....0360 00
REPLACE DRIVER'S SEAT BACK ASSEMBLY....0361 00
REPAIR DRIVER'S SEAT BACK ASSEMBLY....0362 00
REPLACE DRIVER'S SEAT IMPACT ABSORBER....0363 00
REPLACE DRIVER'S SEAT POST ASSEMBLY....0364 00
REPAIR DRIVER'S SEAT POST ASSEMBLY....0365 00
REPLACE DRIVER'S FOOTREST....0366 00
REPLACE OILCAN BRACKET....0367 00

CHAPTER 36 — UNIT MAINTENANCE INSTRUCTIONS FOR PERSONNEL HEATER
REPAIR PERSONNEL HEATER DUCT....0368 00
REPLACE PERSONNEL HEATER DUCT AND HOSES....0369 00
REPAIR PERSONNEL HEATER ASSEMBLY....0370 00
REPLACE PERSONNEL HEATER ASSEMBLY....0371 00
REPAIR PERSONNEL HEATER CONTROL BOX....0372 00
REPLACE PERSONNEL HEATER CONTROL BOX....0373 00
REPLACE FUEL PUMP TO BULKHEAD CONNECTION HOSE....0374 00
REPLACE PERSONNEL HEATER FUEL FILTER/BRACKET....0375 00
REPLACE PERSONNEL HEATER FUEL PUMP....0376 00
REPLACE PERSONNEL HEATER FUEL PUMP HOSE....0377 00
REPLACE HEATER/FILTER FUEL SUPPLY HOSES....0378 00
REPLACE PERSONNEL HEATER FUEL TUBE....0379 00
REPLACE HEATER AIR INTAKE AND EXHAUST PIPES....0380 00
REPLACE FUEL SHUT-OFF VALVE ASSEMBLY....0381 00
SERVICE PERSONNEL HEATER FUEL FILTER....0382 00
SERVICE PERSONNEL HEATER FUEL PUMP....0383 00
BLEED AIR FROM PERSONNEL HEATER FUEL LINES....0384 00

TABLE OF CONTENTS (cont)

WP Sequence No.

CHAPTER 37 — UNIT MAINTENANCE INSTRUCTIONS FOR STE/ICE COMPONENTS
REPLACE STE/ICE PULSE TACHOMETER....0385 00
REPLACE STE/ICE SHUNT....0386 00
REPLACE STE/ICE DISTRIBUTION BOX....0387 00
REPLACE STE/ICE CREW WIRING HARNESS....0388 00
REPLACE STE/ICE ENGINE WIRING HARNESS....0389 00

CHAPTER 38 — UNIT MAINTENANCE INSTRUCTIONS FOR FIRE EXTINGUISHERS
REPLACE FIRE EXTINGUISHER CYLINDER AND MOUNT....0390 00
REPLACE CYLINDER DISCHARGE TUBES....0391 00
REPLACE EXTERNAL HANDLE SHIELD....0392 00
REPLACE FIRE EXTINGUISHER CONTROL VALVE AND EXTERNAL HANDLE….0393 00
REPLACE EXTERNAL CABLE TUBE....0394 00

CHAPTER 39 — UNIT SUPPORTING INFORMATION
REFERENCES....0395 00
MAINTENANCE ALLOCATION CHART (MAC)....0396 00
TOOL IDENTIFICATION LIST....0397 00
TORQUE LIMITS....0398 00
EXPENDABLE AND DURABLE ITEMS LIST....0399 00
DATAPLATES, STENCILS, MARKERS AND DECALS....0400 00
GENERAL MAINTENANCE INSTRUCTIONS....0401 00

HOW TO USE THIS MANUAL

HOW TO USE THIS MANUAL

The safest, easiest, and best way to care for, operate, and maintain the OSV is to use this manual. Learning to use this manual is as easy as reading it. Knowing what is in this manual and how to use it will save you time. Becoming familiar with the work, procedures, and cautions will help you in your job and reduce your exposure to unnecessary hazards.

WHERE DO YOU START

This TM is divided into chapters and front and rear matter. The chapters are further divided into Work Packages (WPs). Go to the area within the manual that covers what you are to do and follow the instructions. Be sure to read and follow the Warnings, Cautions and Notes.

HOW THIS MANUAL IS ORGANIZED

The WARNING SUMMARY section provides safety and first aid information. This section includes general warnings not found in the TM text and a list of the most important detailed warnings extracted from the WPs. All of these warnings cover hazards that could kill or injure personnel.

The TABLE OF CONTENTS lists the WPs in each chapter.

CHAPTER 1 covers General Information, Location and Description, Equipment Data and Theory of operation. The Equipment Description WP gives a brief description of major parts and features of the vehicle. The Theory of Operation WP provides information that will help you understand how the vehicle components work.

CHAPTER 2 contains the troubleshooting procedures that are used to find the cause of vehicle malfunctions.

CHAPTERS 3 through 38 include the maintenance WPs.

The INDEX is an alphabetical listing of all the major controls, procedures, indicators, systems, and subsystems covered in this manual. Each entry is cross-referenced to the WP number and page number.

DA FORM 2028 is used to report errors and to recommend improvements for procedures in this manual. Three blank DA Forms 2028 are in the back of this manual.

The back cover includes a METRIC CONVERSION CHART that can be used to convert U.S. customary measurements to their metric equivalents. Measurements in this manual are given in U.S. customary units with metric units in parentheses.

HOW TO USE THE WORK PACKAGES

Pick a key word from the vehicle part or system to be used. Look in the INDEX for this key word or the name of the action you will perform. The INDEX lists each WP under one or more headings. Each entry is cross-referenced to the WP number. Go to the WP indicated.

How to read the WP

WPs provide either descriptive/supporting information or detailed procedures for operating and maintaining the equipment.

Pay attention to all **warnings**, **cautions** and **notes**. These can appear in all types of procedures. They help you avoid harm to yourself, other personnel, and equipment. They also tell you things you should know about the procedure.

Before you start a procedure, get all the tools, supplies, manuals, and personnel you need to do the procedure. These items will be listed in the INITIAL SETUP of the WP.

HOW TO USE THIS MANUAL (cont)

Read the INITIAL SETUP section carefully before you start any procedure. Make sure you have the required MATERIALS/ PARTS needed to do the task such as sealants, gaskets, lockwashers or other parts. See sample below:

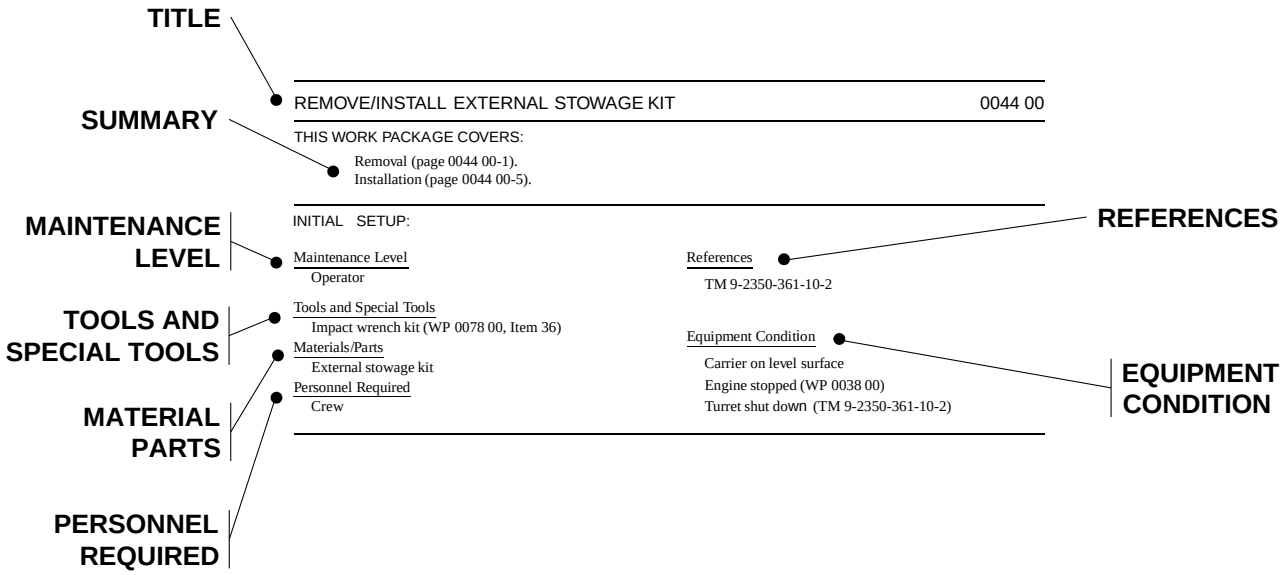

INITIAL SETUP LEGEND

TITLE	The name of the procedure.
SUMMARY	A listing of the general actions to be performed, cross-referenced to the page where each action begins.
MAINTENANCE LEVEL	The level of maintenance authorized to perform the procedures in the WP.
TOOLS AND SPECIAL TOOLS	The tools and equipment needed to do the procedures in the WP.
MATERIALS/PARTS	The supplies and parts needed to do the procedures in the WP.
PERSONNEL REQUIRED	The personnel needed to do the procedures in the WP.
REFERENCES	Other WPs, TMs, and publications you will need to do the procedures in the WP.
EQUIPMENT CONDITION	Any special equipment conditions required before the procedure can be started.

Start with step 1 and do each step in the order given. Numbered steps tell you what to do.

Look at the illustrations. Locators show you where the equipment and parts are located on the vehicle. Closeup illustrations show the details you need to do the procedure.

HOW TO USE THIS MANUAL (cont)

The words END OF TASK will tell you when you have finished the procedure. See sample below:

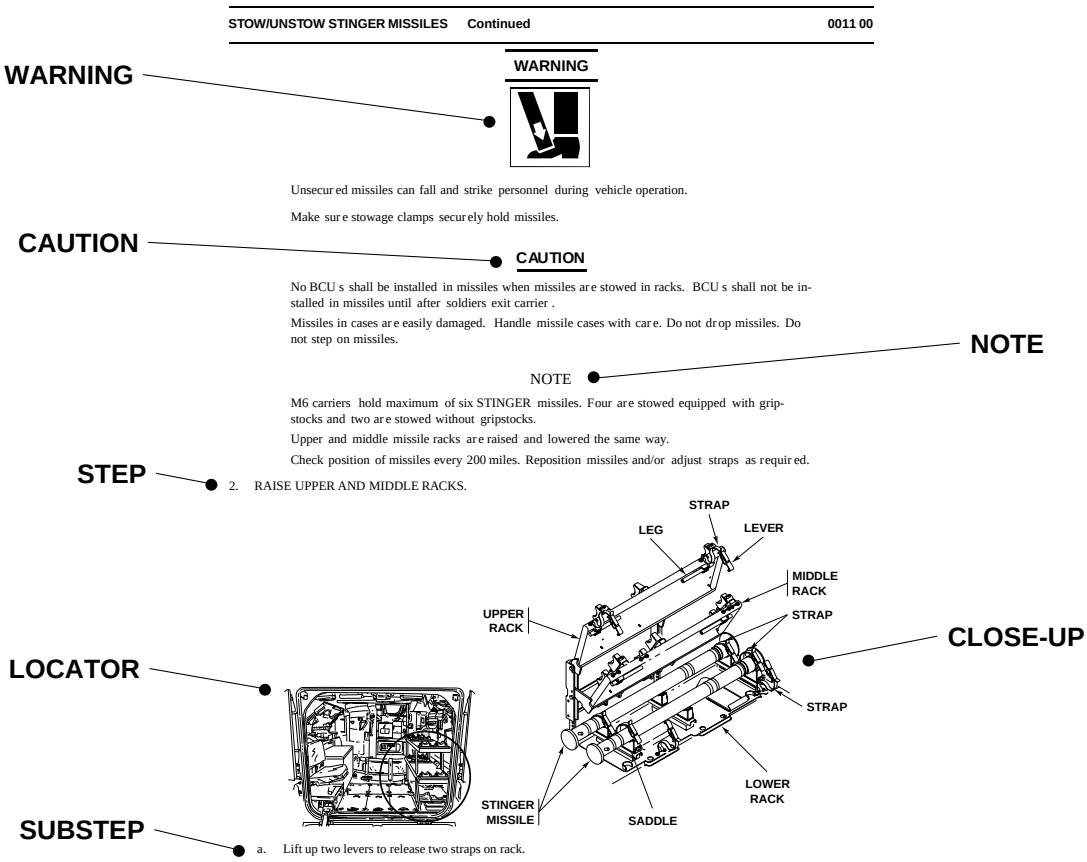

MAINTENANCE STEPS LEGEND

STEP	This tells you WHAT to do.
SUBSTEP	This tells you HOW to do it.
WARNING	This describes some danger to yourself and other personnel.
CAUTION	This describes possible damage to equipment.
NOTE	This gives you additional information which may not be obvious the first time you do the procedure.
LOCATOR	An illustration that locates the equipment on the hull.
CLOSEUP	A detailed illustration of the equipment.

Preventive Maintenance Checks and Services (PMCS) WP

The PMCS procedures are performed on a daily, weekly, and monthly basis to keep the vehicle operating properly.

There are five types of PMCS for the vehicle, as follows:

The BEFORE (B) PMCS must be done before you operate the vehicle.

The DURING (D) PMCS must be done when you operate the vehicle. Monitor the vehicle systems as you perform your mission. Perform DURING (D) PMCS on a system only when the system is required to complete your mission.

HOW TO USE THIS MANUAL (cont)

The AFTER (A) PMCS must be done after completing your mission.
The WEEKLY (W) PMCS must be done weekly.
The MONTHLY (M) PMCS must be done monthly.

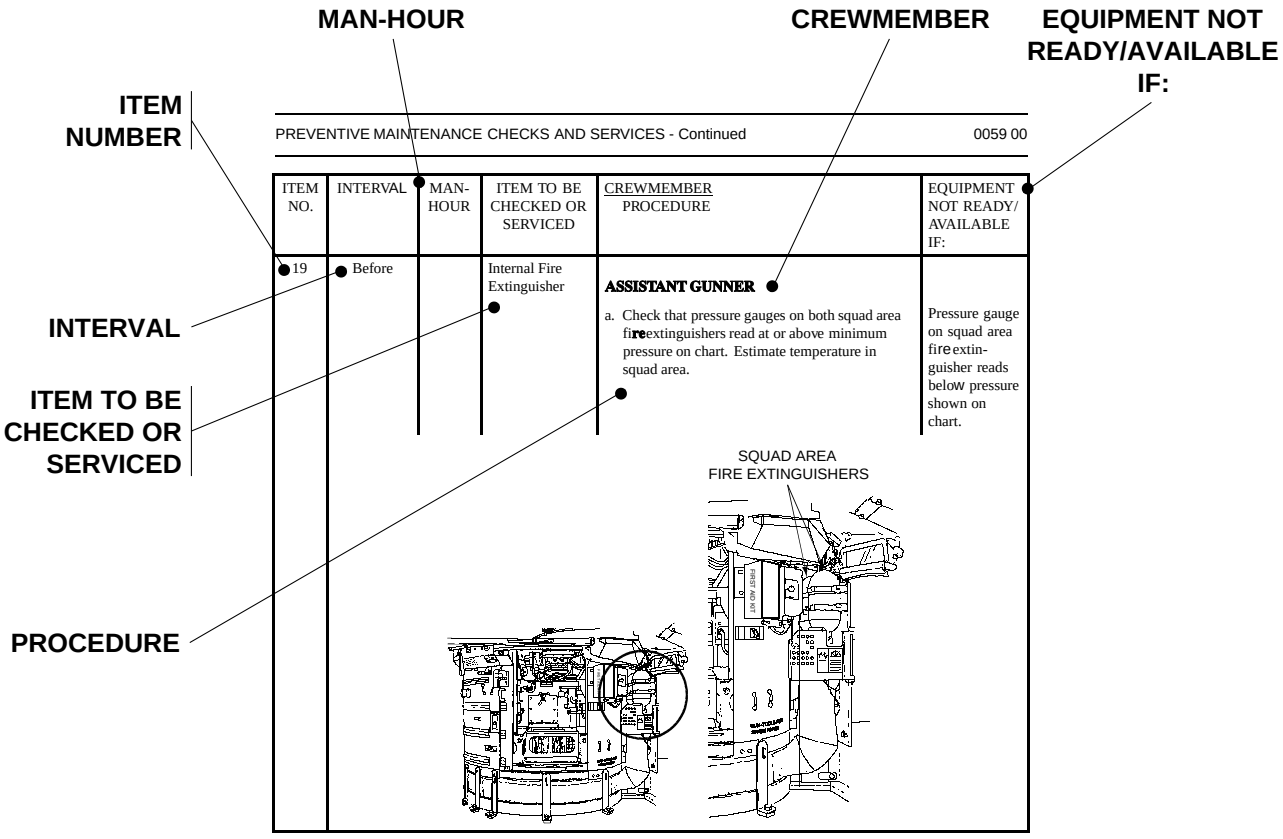

LEGEND

ITEM NUMBER	This is the sequence for doing the PMCS.
INTERVAL	This tells you when to perform the PMCS check.
MAN-HOUR	When equipment must be lubricated, this tells you the man-hours that will be required for the lubrication procedure.
ITEM TO BE CHECKED OR SERVICED	The name of the OSV system or component being checked.
CREWMEMBER	This tells you which crewmember/mechanic must perform the check.
PROCEDURE	This tells you what needs to be done.
EQUIPMENT NOT READY/AVAILABLE IF:	This tells you what conditions make the OSV NOT READY/ AVAILABLE. These conditions will have to be corrected before the system is capable of performing its primary mission.

HOW TO USE THIS MANUAL (cont)

DEFINITION OF WP TERMS

Warnings, Cautions, And Notes

Pay attention to all warnings and cautions within the WP. Ignoring a warning could cause death or injury to yourself or other personnel. Ignoring a caution could cause damage to equipment. Notes contain facts to make the procedure easier. Warnings, cautions, and notes always appear just above the step to which they apply.

WARNINGS	Call attention to things that could kill or injure personnel. Warnings are also listed in the Warning Summary section in the front of the manual.
CAUTIONS	Call attention to actions or materials that could damage equipment.
NOTES	Contain important facts to make the procedure easier.

Helper

Helpers are needed in procedures that require more than one person. A helper may be needed to help lift objects or act as an outside observer.

If a helper is needed to perform a procedure, the INITIAL SETUP will list “Helper (H)” under the PERSONNEL REQUIRED heading.

If a helper assists with a step, the step will include: “Have helper assist”.

If a helper performs the action alone, the step will start with “(H):”.

LOCATION TERMS

The terms “front”, “rear”, “left”, and “right” are used to indicate where items are located on the vehicle. Think of these locations as if you were standing behind the vehicle facing the inside of the vehicle or sitting in the vehicle facing the 30mm gun.

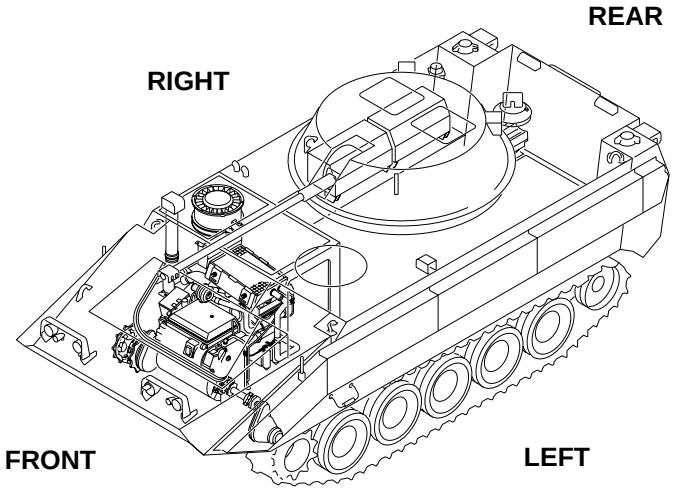

HOW TO USE THIS MANUAL (cont)

If you are working with power unit items think of the location as if you were standing at the end of the transmission facing the engine flywheel. This point of reference applies whether the engine is in or out of the vehicle.

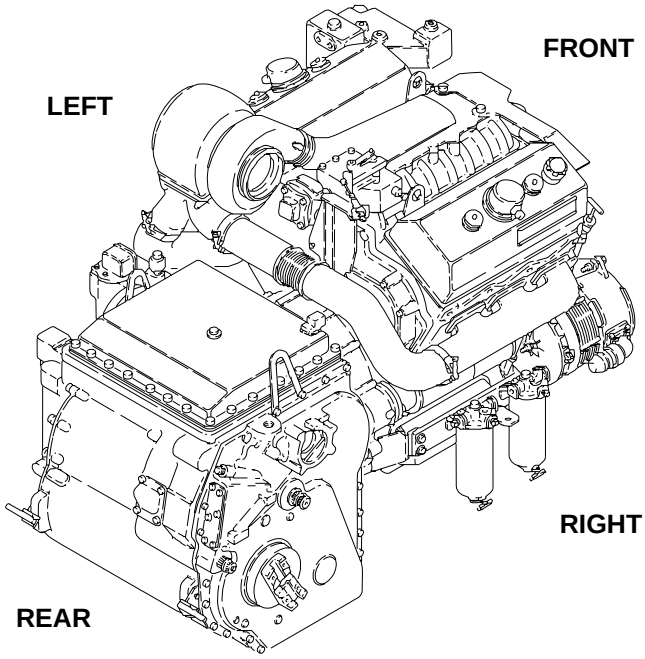

REFERENCES

References within a task refer to a different manual or to another task in the same manual. They are found in the Initial Setup and in task steps. Two frequent WP references are:

MASTER SWITCH OFF (TM 9-2350-366-10-1)
Battery ground lead disconnected (WP 0237 00)

GENERAL MAINTENANCE

Cleaning, inspecting, checking for leaks, and similar procedures which apply to most tasks are found in WP 0401 00, GENERAL MAINTENANCE INSTRUCTIONS. Use the steps in that WP to clean and inspect any part being removed, repaired, or installed. Special cleaning, if required, will be covered in the WP task. Below is a step that would require general cleaning.

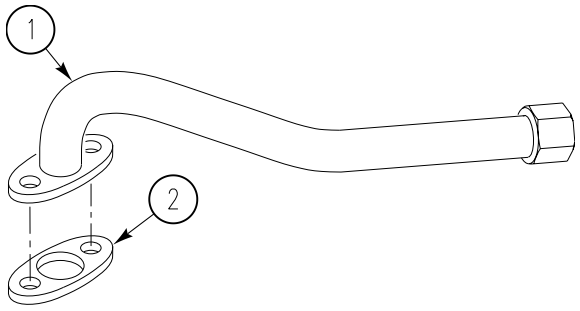

5. REMOVE GASKET (2) FROM UPPER TUBE FLANGE (1)

After doing this step, clean the mating surface of the tube flange with cleaning compound and a wiping rag in accordance with WP 0401 00. In other tasks, hoses or rubber seals would need to be checked for leaks or damage.

HOW TO USE THIS MANUAL (cont)

HOW TO USE THE REPAIR PARTS AND SPECIAL TOOLS LIST (RPSTL)

The RPSTL TM 9-2350-366-24P-1 gives the National Stock Number (NSN) required to order parts used in maintenance tasks. To use the RPSTL to identify and order a part do the following:

1. In this manual, go to first page of task (WP) to be performed.
2. Find Materials/Parts under INITIAL SETUP and note the NSNs for parts that need replacement. If needed, find the illustrated part in the task steps.
3. Go to the RPSTL and find the same illustrated part. Look up the item number for that part in the listing for that figure. Use the figure and item number index to find the National Stock Number (NSN).
4. If you find a part is damaged, go to the RPSTL and find the SMR code for the item. If the SMR code soes not authorize you to repair the item, reassemble it and send it to the authorized level of maintenance.

CHAPTER 1

UNIT INTRODUCTORY INFORMATION WITH THEORY OF OPERATION

WORK PACKAGE INDEX

Title	Sequence No.
GENERAL INFORMATION	0001 00
EQUIPMENT DESCRIPTION AND DATA	0002 00
THEORY OF OPERATION	0003 00
REPAIR PARTS, SPECIAL TOOLS, TMDE, AND SUPPORT EQUIPMENT	0004 00

GENERAL INFORMATION 0001 00

SCOPE

Type of Manual: Unit Maintenance

Equipment Model Number and Name: M113A3/BMP-2 — Opposing Forces Surrogate Vehicle (OSV) Hull

Purpose: Visually and tactically simulate Russian BMP-2 Infantry Fighting Vehicle (IFV) in the National Training Center (NTC) training environment. The M113A3/BMP-2 OSV will be used by Opposing Forces (OPFOR) component to simulate a capabilities-based armored fighting vehicle in maneuver exercises. It is used to transport and position combat troops and supplies.

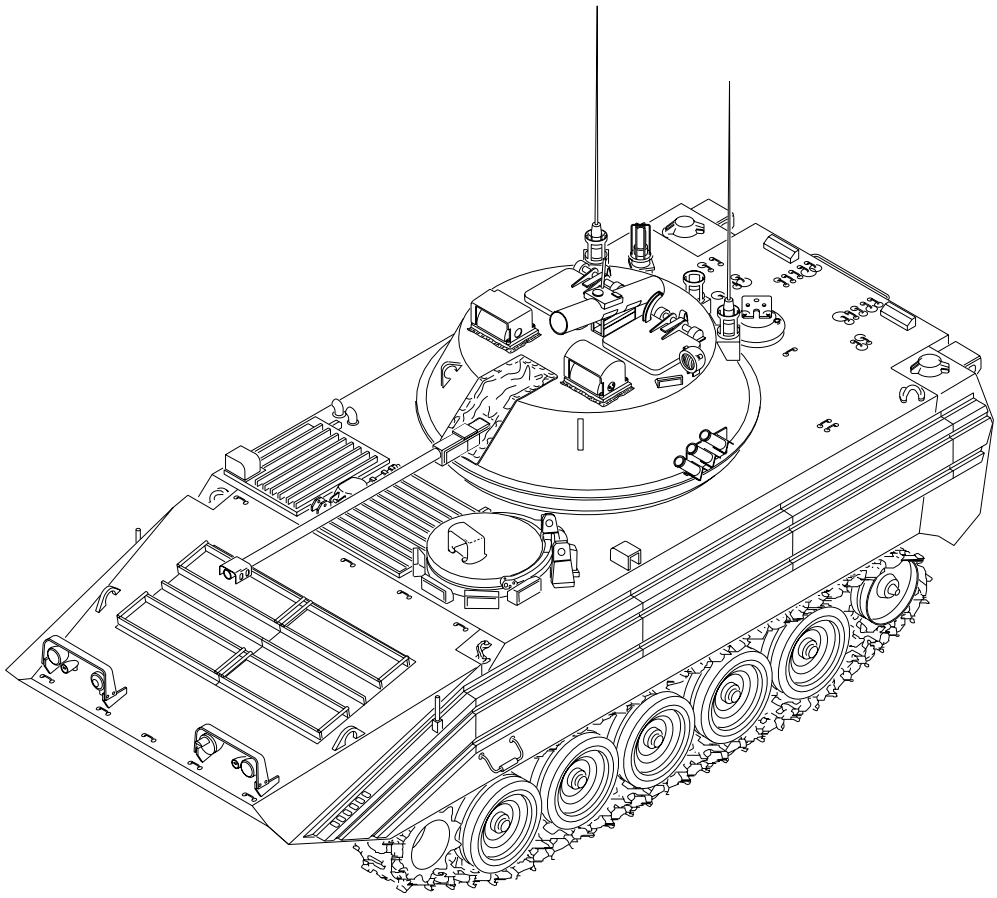

MAINTENANCE FORMS, RECORDS, AND REPORTS

Department of the Army forms and procedures used for equipment maintenance will be those prescribed by DA PAM 738-750, The Army Maintenance Management System (TAMMS).

REPORTING EQUIPMENT IMPROVEMENT RECOMMENDATIONS (EIR)

If your equipment needs improvement, let us know. Send us an EIR. You, the user, are the only one who can tell us what you don't like about your equipment. Let us know why you don't like the design. The preferred method for submitting EIRs is through the Army Electronic Product Support (AEPS) website, under the Electronic Deficiency Reporting System (EDRS). The web address is https://aeps2.ria.army.mil. This is a secured site requiring a password, which can be applied for on the front page of the website. The mailing address for submitting EIRs is: Department of the Army, U.S. Army Tank-automotive and Armaments Command, ATTN: AMSTA-LC-CIP-W, Rock Island, IL 61299-7630. We'll send you a reply.

CORROSION PREVENTION AND CONTROL (CPC)

Corrosion Prevention and Control (CPC) of Army material is a continuing concern. It is important that any corrosion problem with this item be reported so that the problem can be corrected and improvements made to prevent the problem in future items.

While corrosion is typically associated with rusting of metals, it can also include deterioration of other materials, such as rubber and plastic. Unusual cracking, softening, swelling, or breaking of these materials may be a corrosion problem.

If a corrosion problem is identified, it can be reported using SF 368, Product Quality Deficiency Report. Use of key words such as “corrosion”, “rust”, “deterioration,” or “cracking” will ensure that the information is identified as a CPC problem.

The preferred method for submitting QDRs is through the Army Electronic Product Support (AEPS) website, under the Electronic Deficiency Reporting System (EDRS). The web address is https://aeps2.ria.army.mil. This is a secured site requiring a password, which can be applied for on the front page of the website. The mailing address for submitting QDRs is: Department of the Army, U.S. Army Tank-automotive and Armaments Command, ATTN: AMSTA-TR-E-PQDR MS 267, Warren, MI 48397-5000.

DESTRUCTION OF ARMY MATERIEL TO PREVENT ENEMY USE

The following manuals tell you how and when to destroy Army materiel to prevent enemy use:

TM 750-244-2
TM 750-244-5-1
TM 750-244-6
TM 750-244-7

PREPARATION FOR STORAGE OR SHIPMENT

See AR 746-1 for information about administrative storage of the OSV Hull Components.

NOMENCLATURE CROSS-REFERENCE

This listing includes nomenclature cross references used in this manual.

Common Term	Official Nomenclature
Adapter	Nipple, pipe, union
Battery Clamp	Battery terminal adapter
Battery Clamp	Terminal lug
Bilge pump	Rotary pump
Breather	Air filter intake
Bulb	Incandescent lamp
Cleaning solvent	Chlorathane solvent
Coolant gauge	Temp indicator
Detector	Liquid transmitter
Dipstick	Liquid level gauge rod
Drain plug	Pipe plug
Engine oil filter	Fluid pressure filter
Engine oil gauge	Dial pressure gauge
Exhaust collector	Exhaust connection

Fastener	Toggle pin
Fire bottle	Compression gas cylinder
Fluid level detector	Liquid transmitter
Fuel control cable	Fuel control
Fuel filter	Fluid filter
Fuel gauge	Liquid quantity gauge
Gearbox	Mechanical housing
Grease fitting	Lubrication fitting
Hand brake	Parking brake lever
Hatch	Hatch cover
Hinge pin	Headless straight pin
Hinge pin	Machine bolt
Horn switch	Push switch
Hub	Support
Hydraulic power unit	Ramp power unit
Indicator light	Indicator lamp
Inlet grille	Intake grille
Jack	Receptacle
Jamnut	Hexagonal nut
Key washers	Locking plates
Link	Plain rod bearing
Locknut	Self-locking nut
Lock screw	Self-locking bolt
OSV	Opposing Forces Surrogate Vehicle
Parking brake lever	Manual control lever
Plug	Connector
Propeller shaft	Flexible drive shaft
Quick disconnect	Quick coupling half
Road wheel	Solid rubber wheel
Rod	Connecting link
Screen	Metal grille
Screw	Machine Bolt
Shim	Spacer
Shim pack	Spacer assortment
Splined shaft	Output carrier

Starter switch	Interlock switch
Stop light	Taillight
Stowage box	Vehicular accessory box
Tie strap	Electric tiedown strap
Switch	Circuit breaker
Throttle control cable	Throttle control
Towing pintle	Pintle hook latch
Turn signal assembly	Vehicle directional light
Universal joint	Universal joint spider

METRIC SYMBOLS

Metric equivalents are used throughout this manual. Metric symbols and units are:

Symbol	Unit
C	Celsius
cc	Cubic centimeter
cm	Centimeter
j	Joule
kg	Kilogram
kg/min	Kilogram per minute
km	Kilometer
km/h	Kilometer per hour
kPa	Kilopascal
kw-hr	Kilowatt hour
l	Liter
m	Meter
mm	Millimeter
N·m	Newton-meter

LIST OF ABBREVIATIONS / ACRONYMS

Many abbreviations are used in this manual. They are listed below. Learn what each one means. It will make your job easier.

Abbreviation	Meaning
Ammo	Ammunition
AUTO	Automatic
BO	Blackout

BRT	Bright
CAL	Calibration
CKT BKR	Circuit Breaker
DEG	Degrees
DECLIN	Declination
Decontn Appar	Decontamination Apparatus
DISCH	Discharge
FWD	Forward
HI-TEMP	High Temperature
ID PLATE	Identification Plate
IFV	Infantry Fighting Vehicle
INT	Internal
PMCS	Preventive Maintenance Checks and Services
POL	Polarity
PRESS	Pressure
RAD	Radio
SER	Service
SET CRS	Set Course
TEMP	Temperature
TRANS	Transmission
TRK	Track
Vent	Ventilation

SAFETY, CARE, AND HANDLING

Practice all shop safety procedures and read all warnings in this manual prior to work.

Use correct tools and equipment to perform maintenance tasks.

Avoid damage to parts during removal, repair, and installation procedures.

EQUIPMENT DESCRIPTION AND DATA 0002 00

OPPOSING FORCES SURROGATE VEHICLE (OSV)

EQUIPMENT CHARACTERISTICS, CAPABILITIES AND FEATURES

The Opposing Forces Surrogate Vehicle (OSV) was designed to provide training units with a realistic image of a Russian manufactured Boevaya Mashina Pekhota (BMP)-2 which could be identified at a distance of 5/8 mile (1km). The carrier vehicle for the OSV is the M113A3 Armored Personnel Carrier (APC) modified with welded durable forms and Visual Modifications (VISMOD) to simulate the overall length and appearance of the actual BMP-2. The vehicle has a troop carrying capacity of six troops and their equipment. A two man turret assembly, consisting of existing M2/M3 Bradley turret components was integrated into the carrier vehicle. A simulated armament system consists of representations of a 30mm main cannon and a SPANDREL Anti-Tank Guided Missile (ATGM) Launcher. Additional features include a search light and two rear hull doors. For equipment data, see TM 9-2350-366-10-1 and TM 9-2350-366-10-2 (OSV Operator Manuals).

LOCATION AND DESCRIPTIONS OF MAJOR COMPONENTS

ENGINE

A six-cylinder, turbocharged diesel engine (6V53T) is located in the power plant compartment.

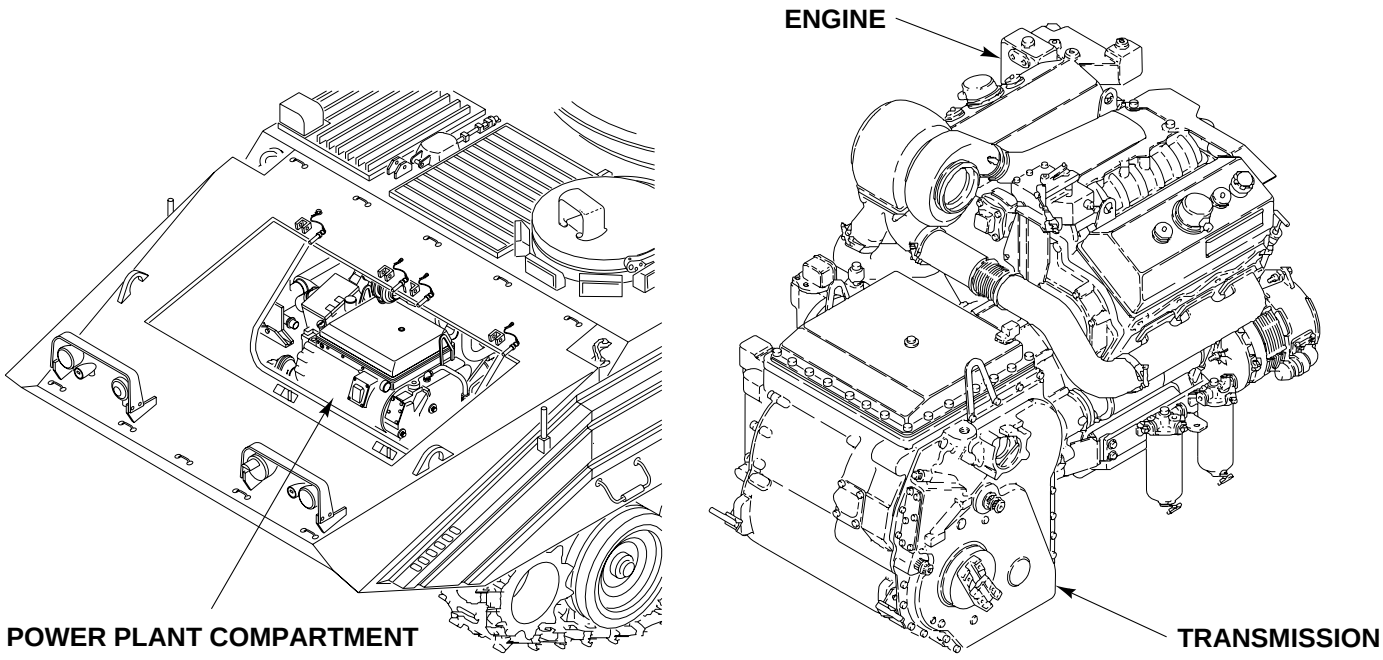

TRANSMISSION

A hydrostatic transmission (X200-4A) connects to the engine and powers the final drives.

FINAL DRIVES

Final drives attach to the transmission by propeller shafts. They deliver power to drive sprockets at the front of the vehicle.

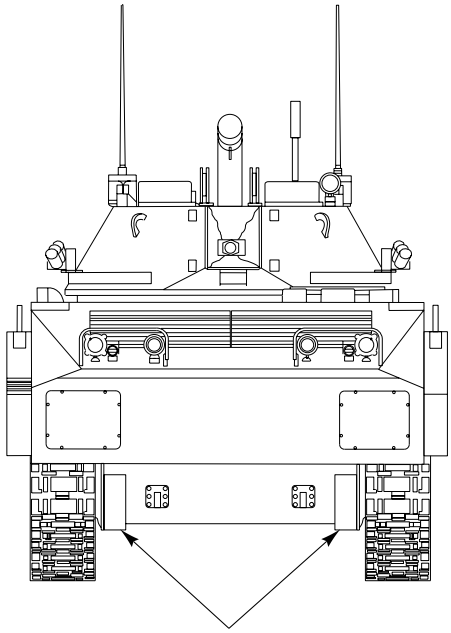

FINAL DRIVES

TRACKS AND SUSPENSION

Drive sprockets at the front of the carrier drive the two tracks. Torsion bars and shock absorbers attach to road wheels and provide suspension. Torsion bars numbers 1, 2 and 3 pairs (left and right) are M548 torsion bars to compensate for the added OSV weight.

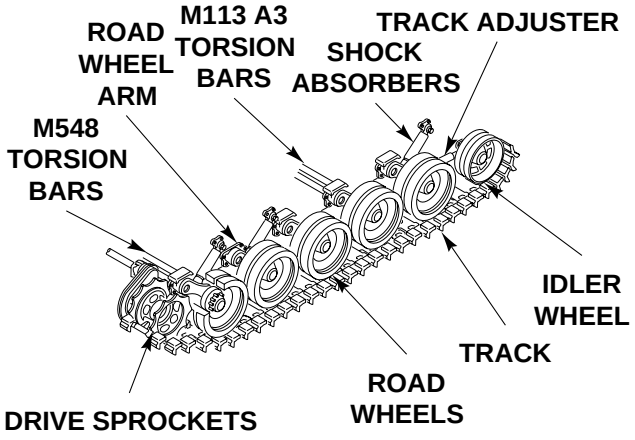

ELECTRICAL

Four 12-volt batteries supply electricity through the distribution box to the vehicle. On the OSV, four batteries are located on the right sponson. Electrical system also includes wiring harness, generator, instrument panel and regulator.

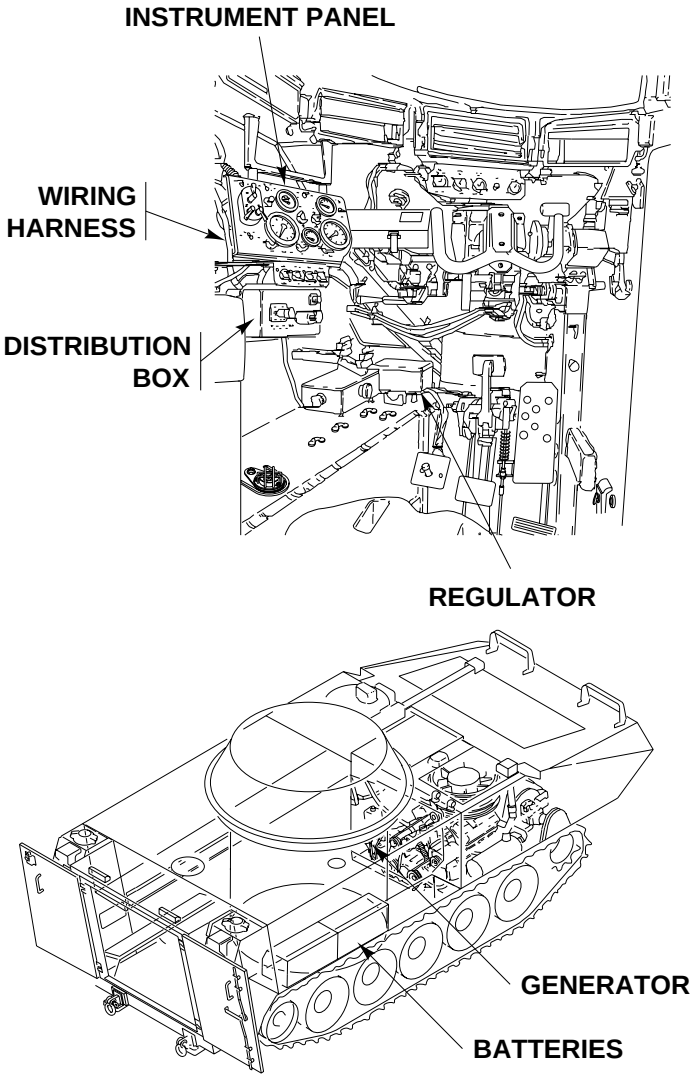

FUEL SYSTEM

The vehicle has two external fuel tanks located at the rear on each side.

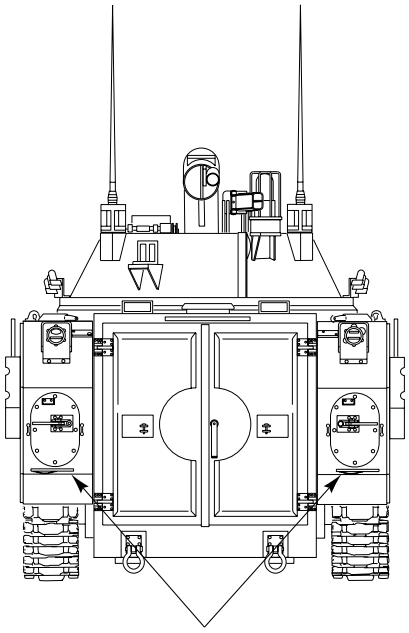

FUEL TANKS

EXHAUST SYSTEM

The exhaust system drives the turbocharger and carries exhaust gases through manifolds and the muffler.

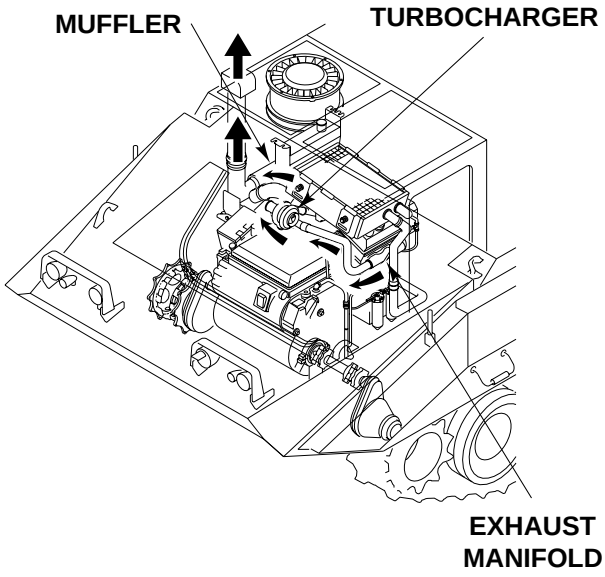

THEORY OF OPERATION 0003 00

SCOPE

This section describes how major systems and components of the vehicle operate. An understanding of how each part functions in a system and how components relate to each other will help solve possible maintenance problems with the vehicle.

POWER PLANT

The power plant consists of the diesel engine and transmission. The fuel, exhaust, cooling, starter, generator, and engine air systems are support systems for the power plant.

DIESEL ENGINE

The diesel (compression ignition) engine is the primary power source for the vehicle. The engine coverts air and diesel fuel into energy and delivers this power to the transmission.

STARTER

The engine is equipped with a heavy duty starter. The starter, with built-in solenoid, is used to crank the engine for starting.

GENERATOR

The generator is part of the vehicle electrical system. It is driven by engine power. The generator charges the batteries in the vehicle when the engine is running. A regulator mounted in the driver’s compartment keeps the voltage at correct levels.

OIL SYSTEM

The oil system provides lubrication for the engine. Oil is recycled throughout the engine by a pump. the pump is located under the front of the engine. An oil filter cleans the oil, and an oil cooler reduces oil temperature.

FUEL SYSTEM

Diesel fuel is stored in two fuel tanks located at the rear of the vehicle. Fuel is drawn from fuel tanks by the fuel pump which pumps fuel through filters to the engine injectors. The injectors force fuel into combustion cylinders where it is mixed with air and changed into energy.

TRANSMISSION

The vehicle uses a hydromechanical transmission with hydrostatic steering. The transmission has its own oil system with filters and separately mounted oil cooler. This transmission oil system is separate from the engine oil system.

The transmission delivers power from the engine to the left and right final drives. The left and right final drives are driven by propeller shafts. The final drives deliver power to drive sprockets in the suspension system.

EXHAUST SYSTEM

Major exhaust system parts are the turbocharger, exhaust manifolds, muffler, and exhaust pipes.

The turbocharger is driven by exhaust gases from the engine. The turbocharger helps the engine develop more power and operate more efficiently. The exhaust manifolds carry the exhaust gases to the turbocharger from the engine. The muffler cuts down engine noise and allows exhaust to escape through the exhaust pipes to the outside of the vehicle.

COOLING SYSTEM

The cooling system cools the engine and transmission. It consists of a fan, fan drive, fan speed control assembly, radiator, coolant pump, auxiliary tank, transmission oil cooler, engine oil cooler, and thermostats. The cooling system contains approximately 14.8 gallons of liquid coolant. The liquid coolant is cycled through the engine and transmission oil cooler by the coolant pump. This process keeps the engine and transmission temperature in a safe operation range.

As coolant flows through the engine, it absorbs heat from the engine and transmission. The heated coolant then flows to the radiator to remove coolant heat. The coolant fan pulls outside air in and through the radiator to remove heat. The fan is powered by the engine through a fan drive.

The radiator auxiliary tank acts as an overflow tank to keep the cooling system from overpressurizing. It also removes air from the engine coolant. There is a low coolant level transmitter to signal the operator if more coolant is needed.

ENGINE AIR SYSTEM

The engine air system allows air to enter the engine. The air cleaner cleans air that enters the engine. Dust is drawn out through a scavenge outlet. Air is filtered through a reusable filter element before delivery to the engine. An air filter indicator shows when the element is clogged and needs cleaning or replacing. After being filtered, the air moves through the turbocharger and into the engine cylinders.

AUXILIARY AUTOMOTIVE SYSTEM

The auxiliary automotive system includes driver controls, fuel cells, personnel heater, bilge pumps, crew ventilation system, and fire suppression systems.

DRIVER CONTROLS

The driver controls regulate the engine, transmission, steering, and braking systems of the vehicle.

The fuel shut off is used to stop the supply of fuel to the engine injectors. To start the engine, the driver must open the valve. The throttle linkages are used to control the engine speed. The gear selector allows the driver to choose the proper gear for the vehicle. The steering system controls the direction of the vehicle. The steering control consists of a steering wheel and linkage connected to the transmission.

The brake system allows the driver to stop a moving vehicle and hold the vehicle in position. The braking system consists of the service brake and the parking brake. The service brakes are hydraulic and applied by pedal. The parking brake mechanically locks the transmission brakes to prevent vehicle movement. Also, the systems has levers, rods, shafts, and linkages connecting to the brake shaft of the transmission.

PERSONNEL HEATER

The personnel heater system provides heat inside the vehicle. Major parts are the combination combustion chamber/ heat exchanger, blowers, a fuel pump, and an electrical control and safety system. The heater operates using diesel fuel drawn from the fuel tanks. Fuel is delivered to the combustion chamber from the fuel pump. Outside air is drawn into the combustion chamber by one of the blowers. A blower draws air from the crew compartment into the combustion chamber. The air is warmed by heat by the combustion process and then returned to the crew compartment.

BILGE PUMPS

Two electrically driven bilge pumps remove water and other liquids from the hull. Water enters the pumps through a screened inlet. The pumps force water out of the vehicle through outlet tubes. The bilge pumps are controlled by the switch on the driver’s instrument panel.

FIRE SUPPRESSION SYSTEM

The fire suppression system consists of two CO2 (Carbon Dioxide) cylinders, one fixed and one portable. Carbon Dioxide can put out fires quickly and effectively. The fixed cylinder only extinguishes fires in the power plant compartment. It is located behind the driver and actuated manually by a handle/knob on the cylinder or by an external handle connected to the cylinder by a cable. The portable fire extinguisher is located in the crew compartment and is manually discharged.

SUSPENSION SYSTEM

The suspension system supports the vehicle and delivers engine power to the road. It allows the vehicle to maneuver and be stable. Suspension system parts are the drive sprockets, tracks, idler wheels, track tension adjuster, roads wheels, and support arms. Also, there are torsion bars and shock absorbers, road arms, and road wheels. Housings that bolt to the hull of the vehicle locate the road arms and provide an attachment point for the torsion bars supporting road arms on the other side of the vehicle. Shock absorbers are used to stabilize the movements of the vehicle on its suspension.

The drive sprockets drive the tracks. They are powered by left and right final drives from the transmission. The tracks consist of two flexible chains of track shoes. The tracks ride on the drive sprockets and are guided by idler wheels. The idler wheels can be adjusted to maintain correct track tension.

There are five pairs of road wheels per side. Track centerguides fit between each pair of road wheels to maintain track alignment. Roadwheels and torsion bars are connected to support arms. The torsion bars act as springs to keep the roadwheels on the ground and from hitting the bottom of the vehicle.

ELECTRICAL SYSTEM

The electrical system provides power for the vehicle. The system operates on wet cell batteries and includes charging, regulating and monitoring equipment. The batteries provide a normal operating 24 volts with an amperage capability of 200 amps per hour.

The batteries supply the vehicle with electricity when the engine is off. All electrical power is delivered through the distribution box. Electrical power flows from the batteries through the distribution box, cables, and wiring assemblies to the electrical equipment. The hull is a ground for the electrical system.

The generator recharges the batteries and supplies electricity while the engine is running. The generator has 200 amps per hour capability.

There are several electrical subsystems within the hull. Each subsystem contains at least one wiring assembly. Major electrical subsystems and assemblies are:

Interior and Exterior Lights. Exterior lights include standard headlights, infrared headlights, taillights/stoplights, and blackout lights. Interior lights include dome lights and panel lights.

Starting and Charging. A generator with a regulator keeps the batteries charged to operating voltage. a starter with a built-in solenoid is used to crank the engine for starting.

Ventilation. Two ventilation fans provide fresh air for the crew. They use a wiring harness to operate and monitor operations.

Bilge Pumps. Two pumps, one in the front and one in the rear of the vehicle, remove any water that may have entered the vehicle. Both pumps are controlled by a switch on the driver’s instrument panel.

SPECIAL EQUIPMENT

Personnel Heater Kit (WP 0371 00)

REPAIR PARTS, SPECIAL TOOLS, TMDE, AND SUPPORT EQUIPMENT 0004 00

COMMON TOOLS AND EQUIPMENT

For authorized common tools and equipment, refer to Modified Table of Organization and Equipment (MTOE) for your unit.

SPECIAL TOOLS, TMDE, AND SUPPORT EQUIPMENT

Special tools, TMDE, and support equipment are listed in MAC WP 0396 00 and in Repair Parts and Special Tools List (RPSTL) TM 9-2350-366-24P-1.

REPAIR PARTS

Repair parts are listed and illustrated in RPSTL TM 9-2350-366-24P-1.

CHAPTER 2

UNIT TROUBLESHOOTING PROCEDURES

WORK PACKAGE INDEX

Title	Sequence No.
INTRODUCTION TO TROUBLESHOOTING	0005 00
MALFUNCTION/SYMPTOM INDEX WP	0006 00
ENGINE OVERHEATS	0007 00
ENGINE DOESN'T CRANK	0008 00
ENGINE DOES NOT START (COLD WEATHER ONLY)	0009 00
WAIT INDICATOR FLASHES DURING START ATTEMPTS (PREGLOW OR AFTERGLOW)	0010 00
WAIT INDICATOR LIGHT DOESN'T LIGHT	0011 00
ENGINE CRANKS SLOWLY	0012 00
ENGINE CRANKS BUT WILL NOT START	0013 00
ENGINE CRANKS BUT WON'T START BELOW 40°F (GLOW PLUGS ARE USED)	0014 00
ENGINE RUNS ROUGH, STALLS, OR DOES NOT PUT OUT FULL POWER	0015 00
GENERATOR MALFUNCTIONS AS INDICATED BY BATTERY/GENERATOR INDICATOR	0016 00
ENGINE OIL LOW PRESSURE INDICATOR COMES ON	0017 00
ENGINE OPERATES AT LESS THAN NORMAL TEMPERATURE	0018 00
ENGINE CHARGING SYSTEM SCHEMATIC	0019 00
ENGINE FUEL SYSTEM SCHEMATIC	0020 00
ENGINE STARTER CIRCUIT SCHEMATIC	0021 00
NO POWER TO TURRET	0022 00
NO EXTERIOR LIGHTS OPERATE	0023 00
BLACKOUT DRIVE LIGHT DOES NOT WORK	0024 00
SERVICE HEADLIGHTS DO NOT WORK	0025 00
SERVICE AND/OR BLACKOUT STOP LIGHTS MALFUNCTION	0026 00
BLACKOUT MARKER LIGHTS DO NOT WORK	0027 00
SERVICE TAILLIGHT(S) DO NOT WORK	0028 00
HORN DOES NOT WORK	0029 00
INSTRUMENT PANEL AND/OR TRANS CONTROLLER ILLUMINATION LIGHTS MALFUNCTION	0030 00
DOME LIGHT(S) DO NOT WORK	0031 00
ELECTRICAL INSTALLATION WIRING DIAGRAM	003200
MASTER SWITCH ON INDICATOR DOES NOT LIGHT	0033 00
FUEL LEVEL INDICATOR MALFUNCTIONS	0034 00
HIGH BEAM INDICATOR LIGHT DOES NOT WORK	0035 00
BATTERY/GENERATOR INDICATOR MALFUNCTIONS	0036 00
PARKING BRAKE INDICATOR MALFUNCTIONS	0037 00
COOLANT TEMP INDICATOR MALFUNCTIONS	0038 00
STEERING LOCKED INDICATOR MALFUNCTIONS	0039 00
ENGINE OIL LOW PRESSURE INDICATOR MALFUNCTIONS	0040 00
TRANSMISSION OIL LOW PRESSURE INDICATOR MALFUNCTIONS	0041 00

CHAPTER 2

UNIT TROUBLESHOOTING PROCEDURES

WORK PACKAGE INDEX (Continued)

Title	Sequence No.
TRANS OIL HI TEMP INDICATOR MALFUNCTIONS	0042 00
ENGINE COOLANT LOW LEVEL INDICATOR MALFUNCTIONS	0043 00
TRANS FILTER CLOGGED INDICATOR MALFUNCTIONS	0044 00
INDICATORS SCHEMATIC	0045 00
DRIVER'S VENTILATION FAN DOES NOT BLOW AIR	0046 00
CREW VENTILATION FAN DOES NOT BLOW AIR	0047 00
VENTILATION FAN SCHEMATIC	0048 00
VEHICLE MOVES WITH TRANSMISSION IN SL	0049 00
VEHICLE DOES NOT MOVE IN ANY SHIFT LEVER POSITION	0050 00
VEHICLE DRIFTS OR DOES NOT STEER	0051 00
SERVICE AND/OR PARKING BRAKE WILL NOT HOLD VEHICLE	0052 00
TRANSMISSION WILL NOT UPSHIFT OR SHIFTS ERRATICALLY IN 1-4 POSITION	0053 00
TRANSMISSION DOES NOT DOWNSHIFT IN 1-4 POSITION	0054 00
TRANSMISSION DOES NOT HOLD 1ST POSITION	0055 00
TRANSMISSION DOES NOT HOLD 2ND POSITION	0056 00
TRANSMISSION DOES NOT HOLD 3RD POSITION	0057 00
TRANSMISSION DOES NOT REVERSE	0058 00
TRANSMISSION DOES NOT PIVOT STEER	0059 00
TRANSMISSION HIGH TEMP INDICATOR COMES ON	0060 00
TRANSMISSION OIL LOW PRESSURE INDICATOR COMES ON	0061 00
TRANSMISSION SYSTEM SCHEMATIC	0062 00
STEERING LOCK MALFUNCTIONS	0063 00
STEERING LOCK SCHEMATIC	0064 00
BILGE PUMP AND/OR LIGHT DON'T WORK	0065 00
BILGE PUMP SCHEMATIC	0066 00
PERSONNEL HEATER MALFUNCTIONS	0067 00
PERSONNEL HEATER SCHEMATIC	0068 00
SPEEDOMETER MALFUNCTIONS	0069 00
TACHOMETER MALFUNCTIONS	0070 00
HOOK UP/REMOVE STE/ICE TEST SET TO DCA 6	0071 00
STE/ICE TEST 10 ENGINE RPM	0072 00
STE/ICE TEST 24 FUEL SUPPLY PRESSURE	0073 00
STE/ICE TEST 25 FUEL RETURN PRESSURE	0074 00
STE/ICE TEST 32 AIR BOX PRESSURE	0075 00
STE/ICE TEST 67 BATTERY VOLTAGE	0076 00
STE/ICE TEST 68 STARTER MOTOR VOLTAGE	0077 00
STE/ICE TEST 69 STARTER NEGATIVE CABLE VOLTAGE DROP	0078 00
STE/ICE TEST 70 STARTER SOLENOID VOLTAGE	0079 00

CHAPTER 2

UNIT TROUBLESHOOTING PROCEDURES

WORK PACKAGE INDEX (Continued)

Title	Sequence No.
STE/ICE TEST 71 STARTER CURRENT (AVERAGE)	0080 00
STE/ICE TEST 72 STARTER CURRENT (FIRST PEAK)	0081 00
STE/ICE TEST 73 BATTERY RESISTANCE AND STE/ICE TEST 75 BATTERY RESISTANCE CHANGE (PACK)	0082 00
STE/ICE TEST 74 STARTER CIRCUIT RESISTANCE	0083 00
STE/ICE TEST 80 BATTERY CURRENT	0084 00
STE/ICE TEST 82 GENERATOR OUTPUT VOLTAGE	0085 00
STE/ICE TEST 83 GENERATOR FIELD VOLTAGE	0086 00
STE/ICE TEST 84 GENERATOR NEGATIVE CABLE VOLTAGE DROP	0087 00
STE/ICE BLANK DISPLAY DIAGNOSTIC TROUBLESHOOTING	0088 00
STE/ICE CONFIDENCE TEST DIAGNOSTIC TROUBLESHOOTING	0089 00
STE/ICE TEST 10, 12 AND 13 DIAGNOSTIC TROUBLESHOOTING	0090 00
DCA BATTERY VOLTAGE DIAGNOSTIC TROUBLESHOOTING	0091 00
DCA CURRENT SHUNT DIAGNOSTIC TROUBLESHOOTING	009200
STE/ICE TEST 24 FUEL SUPPLY PRESSURE DIAGNOSTIC TROUBLESHOOTING	0093 00
STE/ICE TEST 25 FUEL RETURN PRESSURE DIAGNOSTIC TROUBLESHOOTING	0094 00
STE/ICE TEST 32 AIR BOX PRESSURE DIAGNOSTIC TROUBLESHOOTING	0095 00
STE/ICE TEST 68 STARTER MOTOR VOLTAGE DIAGNOSTIC TROUBLESHOOTING	0096 00
STE/ICE TEST 69 STARTER NEGATIVE CABLE VOLTAGE DROP DIAGNOSTIC TROUBLESHOOTING	009700
STE/ICE TEST 70 STARTER SOLENOID VOLTAGE DIAGNOSTIC TROUBLESHOOTING	0098 00
STE/ICE TEST 82 GENERATOR OUTPUT VOLTAGE DIAGNOSTIC TROUBLESHOOTING	0099 00
STE/ICE TEST 83 GENERATOR FIELD VOLTAGE DIAGNOSTIC TROUBLESHOOTING	0100 00
STE/ICE TEST 84 GENERATOR NEGATIVE CABLE VOLTAGE DROP DIAGNOSTIC TROUBLESHOOTING	010100
STE/ICE SCHEMATIC	0102 00

INTRODUCTION TO TROUBLESHOOTING 0005 00

PURPOSE

The purpose of unit troubleshooting is to diagnose problems which are reported to unit maintenance. You should not begin unit troubleshooting until **ALL** operator troubleshooting procedures have been performed. You will perform four actions in unit troubleshooting:

(1) Before starting a troubleshooting task, verify that the reported problem is present.
(2) After verifying the symptom, find the part that is causing problem.
(3) Replace or adjust that part.
(4) Check to make sure problem no longer exists, and that there are no other problems.

DEFINITIONS AND DESCRIPTIONS OF TROUBLESHOOTING PARTS

Troubleshooting tasks always have a beginning and an end. You will use task steps, test procedures, indexes, maintenance tasks, and other technical manuals to troubleshoot. Troubleshooting uses the following terms that are not used in other kinds of tasks:

1. FAULT:	The part that is not operating correctly and is causing the problem.
2. SYMPTOM:	The problem reported to unit maintenance.
3. STE/ICE:	Diagnostic and test equipment used to troubleshoot at unit maintenance level. It is used to make measurements and find faulty parts in the carrier system.
4. VERIFY NO FAULTS FOUND:	After you have completed the corrective action, you must verify that no faults exist. If the fault condition still exists, then the fault is not fixed or there is another fault. If this happens, start at the beginning of the correct/appropriate troubleshooting procedure until you find and correct all faults. Always operate the system and/or carrier to make sure that you have corrected the reported problem. If troubleshooting does not identify a faulty part, the carrier is defective beyond the level of unit maintenance.

TROUBLESHOOTING BASICS

Troubleshooting Procedure

A troubleshooting procedure serves as a starting point for your troubleshooting work. You will branch in and out of procedures as you work to find a fault. After correcting the fault, check that the problem has been corrected. The parts of a troubleshooting procedure are given below.

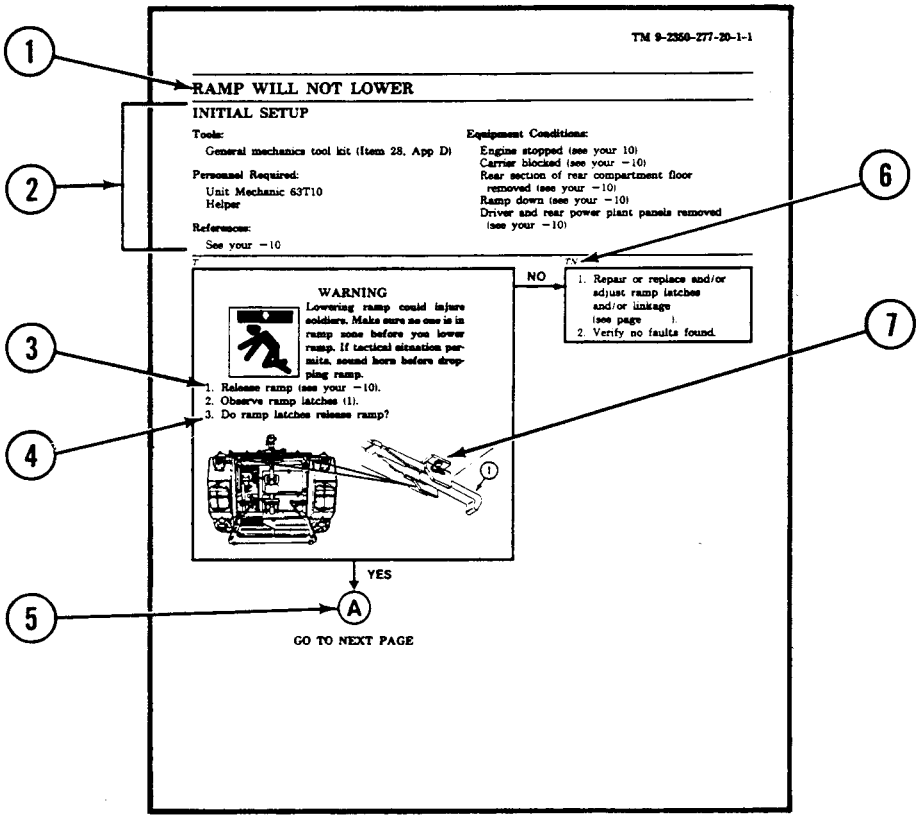

Legend to Sample Above

1 Title	This is the name of the procedure that best describes your symptom.
2 Initial Setup	This tells you the tools, materials/parts, personnel, references, and equipment conditions needed to do the procedure.
3 Task Steps	Step-by-step instructions that isolate the fault.
4 Question	Asks a question necessary to continue.
5 Reference Letter	This will send you to the correct block to continue with the troubleshooting procedure.
6 Block ID Code	Defines the correct troubleshooting chain.
7 Illustration	These help you locate and idenfity parts.

STE-ICE Test Procedure

A STE/ICE test procedure will tell you how to use the STE/ICE test equipment. You may be directed to go to a STE/ICE test procedure when performing the troubleshooting procedures. The parts of a STE/ICE test procedure are given below.

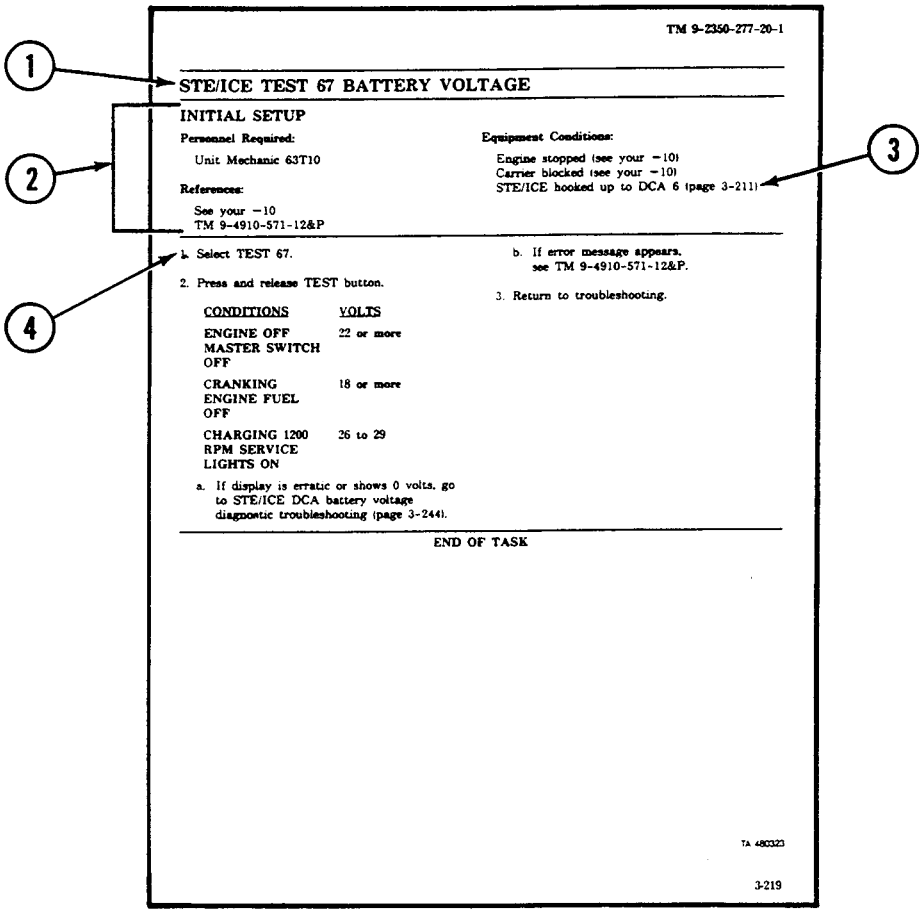

TM 9-2350-277-20-1

STE/ICE TEST 67 BATTERY VOLTAGE

INITIAL SETUP

Personnel Required:
Unit Mechanic 63T10

References:
See your −10
TM 9-4910-571-12&P

Equipment Conditions:
Engine stopped (see your −10)
Carrier blocked (see your −10)
STE/ICE hooked up to DCA 6 (page 3-211)

a. Select TEST 67.
2. Press and release TEST button.

CONDITIONS	VOLTS
ENGINE OFF MASTER SWITCH OFF	22 or more
CRANKING ENGINE FUEL OFF	18 or more
CHARGING 1200 RPM SERVICE LIGHTS ON	26 to 29

a. If display is erratic or shows 0 volts, go to STE/ICE DCA battery voltage diagnostic troubleshooting (page 3-244).

b. If error message appears, see TM 9-4910-571-12&P.
3. Return to troubleshooting.

END OF TASK

TA 480323

3-219

1
2
3
4

Legend to Sample Above

1 Title	Test number and procedure name.
2 Initial Setup	This tells you the tools, materials/parts, personnel, references, and equipment conditions needed to do the procedure.
3 STE/ICE Hook up	Steps that tell you how to perform the HOOK UP/REMOVE STE/ICE test.
4 Task Steps	Steps that tell you how to set up and perform the test.

Before you begin, make sure you have all items in the INITIAL SETUP. Do all steps in the test procedure and then return to where you left off in troubleshooting task. Continue to follow troubleshooting task instructions to find and correct the fault.

Locating the Correct Troubleshooting Procedure

(1) Carrier arrives at shop.
(2) Read DA Form 2404.
(3) Verify that the problem on DA Form 2404 exists.
(4) Look up the carrier symptom in the Troubleshooting Fault Symptom Index (WP 0006 00) and go to that task.

Doing the Troubleshooting Procedure

(1) Make sure you have all items in INITIAL SETUP.
(2) Perform required action(s) in Equipment Conditions.
(3) Complete the first block of task steps.
(4) Refer to system schematics for system components, details, and configuration.
(5) Answer question at the bottom of the first block.
(6) Follow YES or NO arrows to next block.
(7) Move from block to block. Answer questions and follow instructions. You may be directed to:
    do further checks and tests on parts;
    go to another manual and do tasks;
    or go to another task in this manual.

NOTE

After completing the actions called for on another page or manual, return to the point in the troubleshooting procedure where you left off.

(8) Locate the fault in the carrier or part, and perform the corrective action.
(9) Check to make sure the fault is corrected, and there are no new faults.
(10) Button up by installing items listed in Equipment Conditions after finishing the troubleshooting task.

TROUBLESHOOTING SAMPLE

The following sample takes you through a typical troubleshooting procedure.

Finding the Right Troubleshooting Procedure

A carrier arrives at the shop. The DA form 2404 shows that the engine cranks slowly. The best task match is ENGINE CRANKS SLOWLY (WP 0012 00).

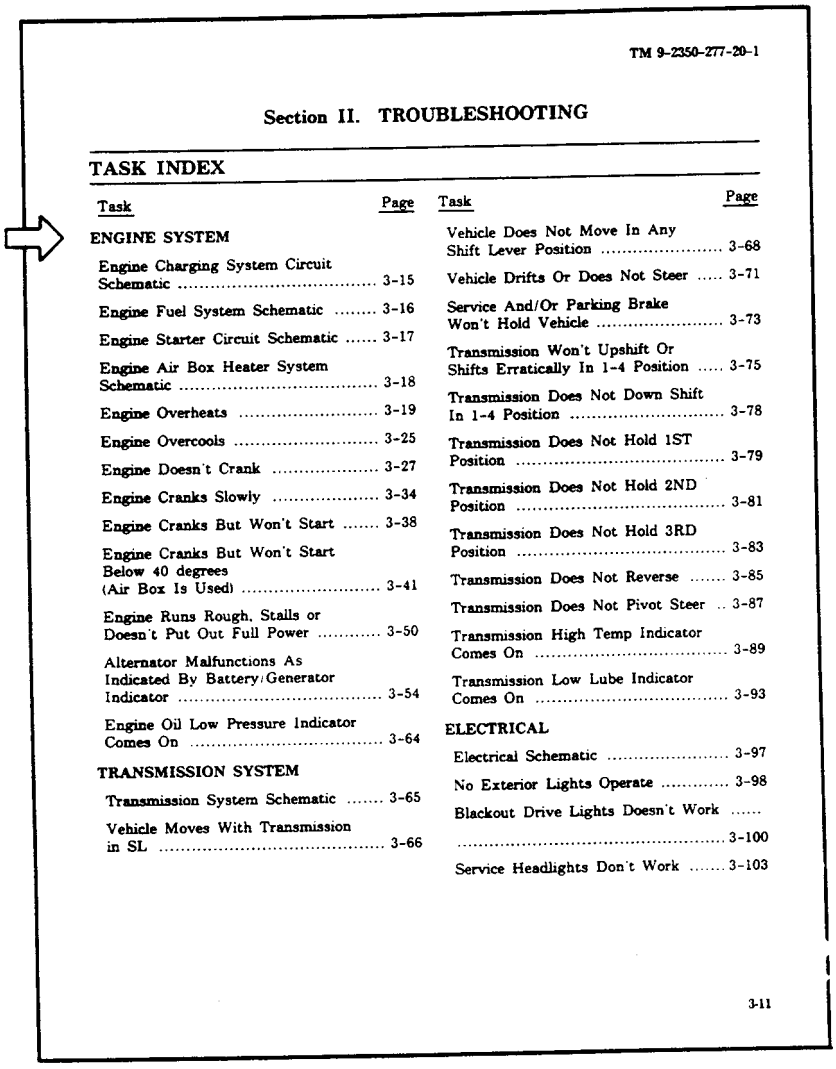

TM 9-2350-277-20-1

Section II. TROUBLESHOOTING

TASK INDEX

Task	Page
ENGINE SYSTEM	
Engine Charging System Circuit Schematic	3-15
Engine Fuel System Schematic	3-16
Engine Starter Circuit Schematic	3-17
Engine Air Box Heater System Schematic	3-18
Engine Overheats	3-19
Engine Overcools	3-25
Engine Doesn't Crank	3-27
Engine Cranks Slowly	3-34
Engine Cranks But Won't Start	3-38
Engine Cranks But Won't Start Below 40 degrees (Air Box Is Used)	3-41
Engine Runs Rough, Stalls or Doesn't Put Out Full Power	3-50
Alternator Malfunctions As Indicated By Battery/Generator Indicator	3-54
Engine Oil Low Pressure Indicator Comes On	3-64
TRANSMISSION SYSTEM	
Transmission System Schematic	3-65
Vehicle Moves With Transmission in SL	3-66
Vehicle Does Not Move In Any Shift Lever Position	3-68
Vehicle Drifts Or Does Not Steer	3-71
Service And/Or Parking Brake Won't Hold Vehicle	3-73
Transmission Won't Upshift Or Shifts Erratically In 1-4 Position	3-75
Transmission Does Not Down Shift In 1-4 Position	3-78
Transmission Does Not Hold 1ST Position	3-79
Transmission Does Not Hold 2ND Position	3-81
Transmission Does Not Hold 3RD Position	3-83
Transmission Does Not Reverse	3-85
Transmission Does Not Pivot Steer	3-87
Transmission High Temp Indicator Comes On	3-89
Transmission Low Lube Indicator Comes On	3-93
ELECTRICAL	
Electrical Schematic	3-97
No Exterior Lights Operate	3-98
Blackout Drive Lights Doesn't Work	3-100
Service Headlights Don't Work	3-103

3-11

This is the procedure you want.

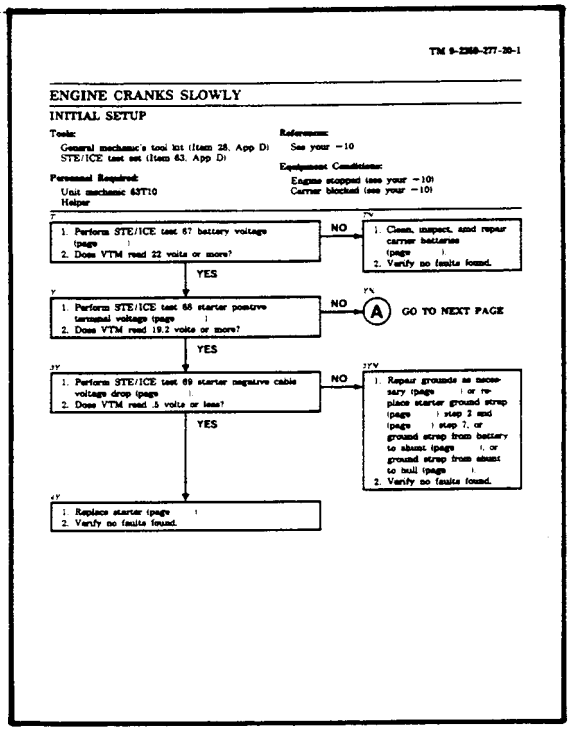

TM 9-2350-277-20-1

ENGINE CRANKS SLOWLY

INITIAL SETUP

Tools:
General mechanic's tool kit (Item 28, App D)
STE/ICE test set (Item 63, App D)

Personnel Required:
Unit mechanic 63T10
Helper

References:
See your −10

Equipment Conditions:
Engine stopped (see your −10)
Carrier blocked (see your −10)

1. Perform STE/ICE test 67 battery voltage (page)
2. Does VTM read 22 volts or more?

NO → 1. Clean, inspect, and repair carrier batteries (page).
2. Verify no faults found.

YES

1. Perform STE/ICE test 68 starter positive terminal voltage (page)
2. Does VTM read 19.2 volts or more?

NO → (A) GO TO NEXT PAGE

YES

1. Perform STE/ICE test 69 starter negative cable voltage drop (page)
2. Does VTM read .5 volts or less?

NO → 1. Repair grounds as necessary (page) or replace starter ground strap (page) step 2 and (page) step 7, or ground strap from battery to chassis (page), or ground strap from chassis to hull (page).
2. Verify no faults found.

YES

1. Replace starter (page)
2. Verify no faults found.

Check the title to make sure you are troubleshooting the correct system for the problem. Read the INITIAL SETUP carefully and make sure you have all items listed. Some access steps in Equipment Conditions may not need to be performed depending on the fault location. You decide which are necessary for your particular problem.

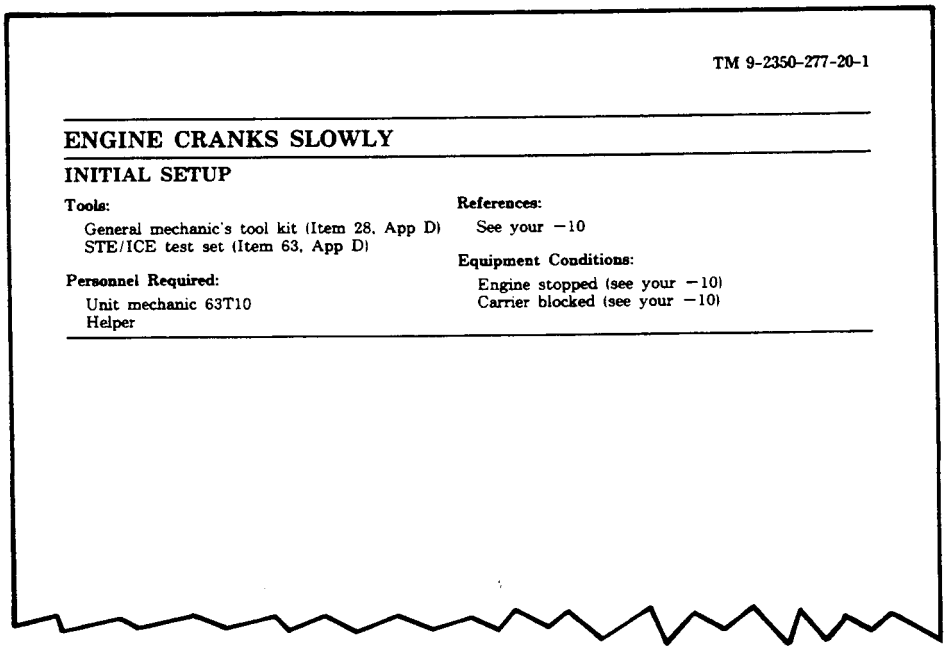

TM 9-2350-277-20-1

ENGINE CRANKS SLOWLY

INITIAL SETUP

Tools:
General mechanic's tool kit (Item 28, App D)
STE/ICE test set (Item 63, App D)

Personnel Required:
Unit mechanic 63T10
Helper

References:
See your −10

Equipment Conditions:
Engine stopped (see your −10)
Carrier blocked (see your −10)

This is the first block of the troubleshooting task. Step1 has you performing a STE/ICE test. Go to the page shown. You will be using a STE/ICE test procedure for this step. Come back to this block when you complete the test.

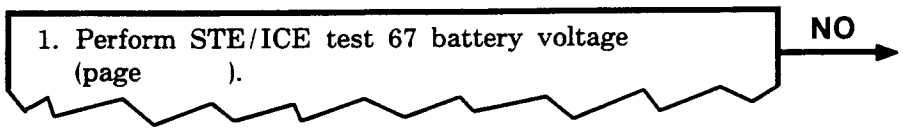

Here is the STE/ICE test procedure. It will give you more steps to find the fault. Before you begin, make sure you have all the items in the INITIAL SETUP. Do all the steps in the procedure. After you do the steps, go back to where you left off in the troubleshooting task.

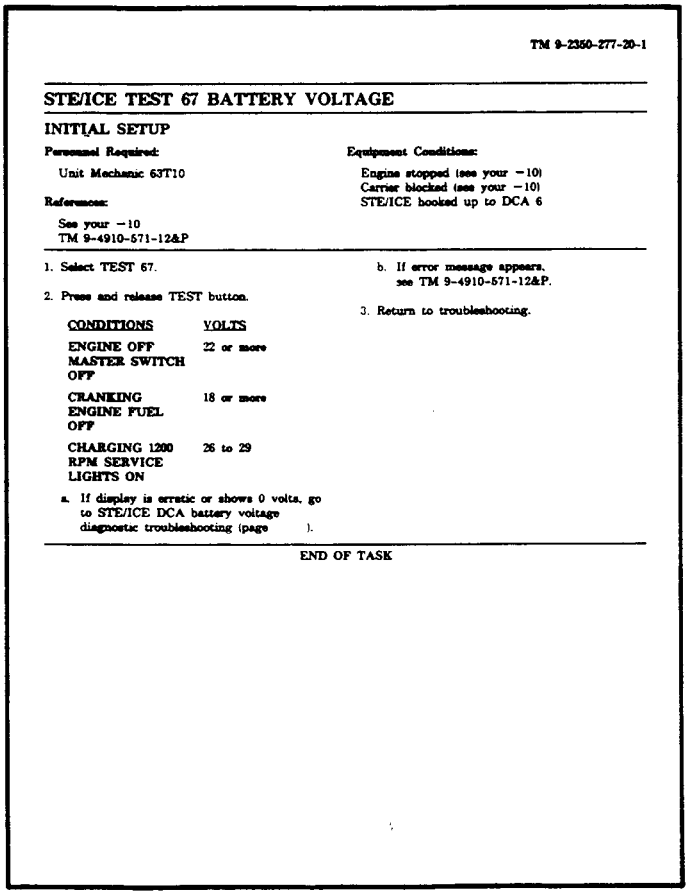

TM 9-2350-277-20-1

STE/ICE TEST 67 BATTERY VOLTAGE

INITIAL SETUP

Personnel Required:
Unit Mechanic 63T10

References:
See your −10
TM 9-4910-571-12&P

Equipment Conditions:
Engine stopped (see your −10)
Carrier blocked (see your −10)
STE/ICE hooked up to DCA 6

1. Select TEST 67.
2. Press and release TEST button.

CONDITIONS	VOLTS
ENGINE OFF MASTER SWITCH OFF	22 or more
CRANKING ENGINE FUEL OFF	18 or more
CHARGING 1200 RPM SERVICE LIGHTS ON	26 to 29

a. If display is erratic or shows 0 volts, go to STE/ICE DCA battery voltage diagnostic troubleshooting (page).
b. If error message appears, see TM 9-4910-571-12&P.
3. Return to troubleshooting.

END OF TASK

This is where you left off in the troubleshooting task. Answer the question in step 2. The answer to the question depends on what you found when you did the STE/ICE test procedure. In this sample, let us say the test shows 22 volts. So the answer to the question, "Does test read 22 volts or more?" is YES. Follow the YES arrow to the next block.

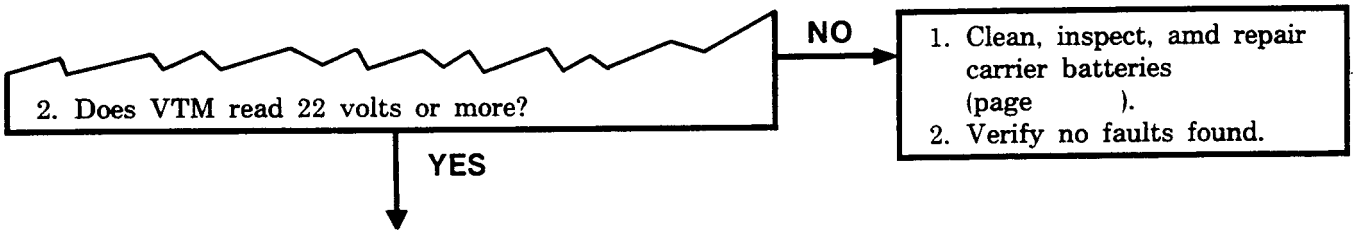

The YES arrow takes you to this block. Do steps 1 and 2. In this sample, let us say the test shows 17 volts. So the answer to the question, "Does VTM read 19.2 volts or more?" is NO. Follow the NO arrow to the reference indicated.

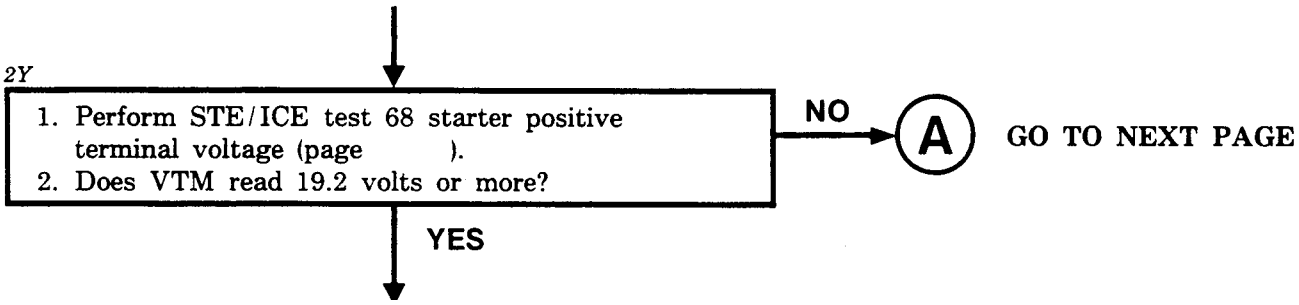

This is how the reference appears once you locate it. Do steps 1 thru 3. Let us say the VTM reads less than 19.2 volts. So the answer to the question, "Does VTM read less than 19.2 volts?" is YES. Follow the YES arrow to the next block.

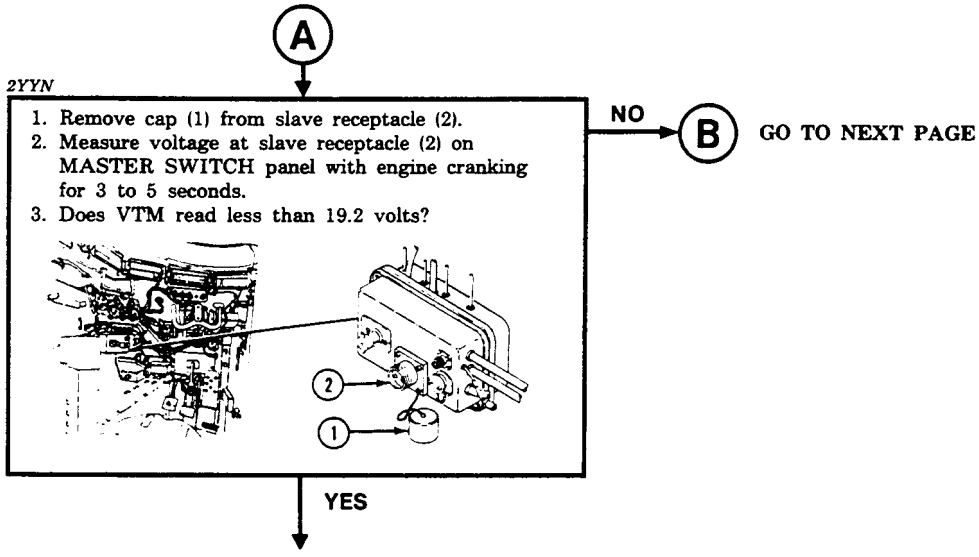

The YES arrow takes you to this block. Do steps 1 thru 3. In this sample, let us say the terminal end is free from corrosion and/or other damage. So the answer to step 3 is YES. Follow the YES arrow to the next block.

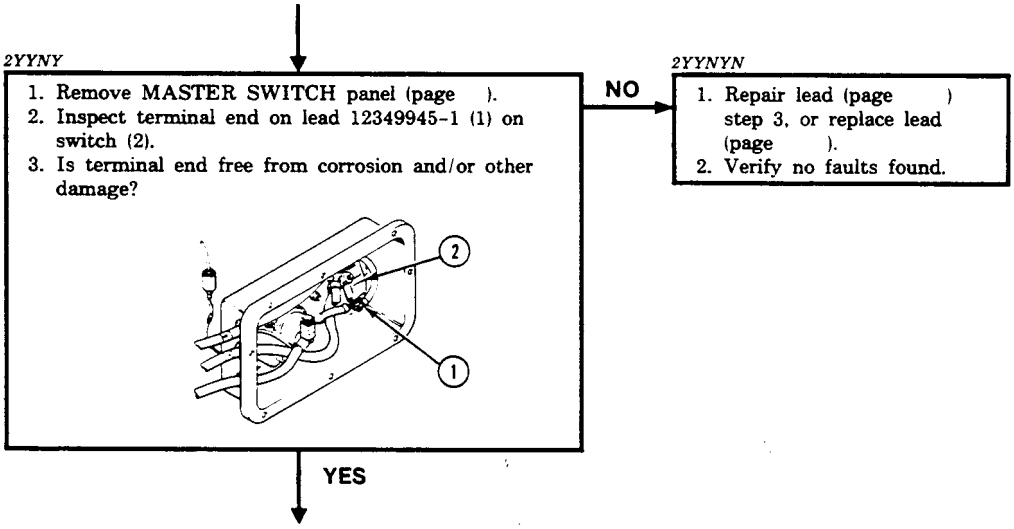

The YES arrow takes you to this block. You have found the fault in the MASTER SWITCH. This block gives you the step to correct the fault. Do step 1. It tells you to go to another task in the manual. Go to the page shown and perform the task. Return to this block when you have completed the task.

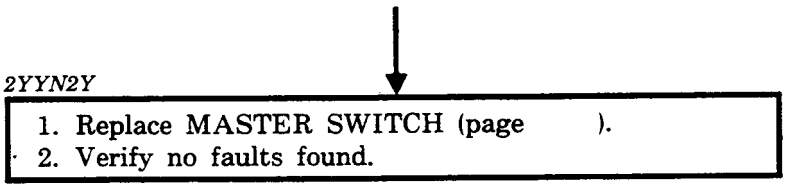

Step 2 in this block is “Verify no faults found.” Check to make sure you have fixed the reported fault and there are no other problems. After no faults have been verified, return carrier to operation.

This section has given you information on how to use troubleshooting. By going through the troubleshooting sample, you have seen how parts of this chapter are used. This information will help you successfully troubleshoot at the unit maintenance level.

MALFUNCTION/SYMPTOM INDEX WP 0006 00

ENGINE SYSTEM

ENGINE OVERHEATS....WP 0007 00
ENGINE DOESN'T CRANK....WP 0008 00
ENGINE DOES NOT START (COLD WEATHER ONLY)....WP 0009 00
WAIT INDICATOR FLASHES DURING START ATTEMPTS (PREGLOW AND AFTERGLOW)....WP 0010 00
WAIT INDICATOR DOESN'T LIGHT....WP 0011 00
ENGINE CRANKS SLOWLY....WP 0012 00
ENGINE CRANKS BUT WILL NOT START....WP 0013 00
ENGINE CRANKS BUT WON'T START BELOW 40°F (GLOW PLUGS ARE USED)....WP 0014 00
ENGINE RUNS ROUGH, STALLS, OR DOES NOT PUT OUT FULL POWER....WP 0015 00
GENERATOR MALFUNCTIONS AS INDICATED BY BATTERY/GENERATOR INDICATOR....WP 0016 00
ENGINE OIL LOW PRESS INDICATOR COMES ON....WP 0017 00
ENGINE OPERATES AT LESS THAN NORMAL TEMPERATURE....WP 0018 00

ELECTRICAL SYSTEM

NO POWER TO TURRET....WP 0022 00
NO EXTERIOR LIGHTS OPERATE....WP 0023 00
BLACKOUT DRIVE LIGHT DOES NOT WORK....WP 0024 00
SERVICE HEADLIGHTS DO NOT WORK....WP 0025 00
SERVICE AND/OR BLACKOUT STOP LIGHTS MALFUNCTION....WP 0026 00
BLACKOUT MARKER LIGHTS DO NOT WORK....WP 0027 00
SERVICE TAILLIGHT(S) DO NOT WORK....WP 0028 00
HORN DOES NOT WORK....WP 0029 00
INSTRUMENT PANEL AND/OR TRANS CONTROLLER ILLUMINATION LIGHTS MALFUNCTION....WP 0030 00
DOME LIGHT(S) DO NOT WORK....WP 0031 00

INSTRUMENT AND WARNING LIGHT PANEL INDICATORS

MASTER SWITCH ON INDICATOR DOES NOT LIGHT....WP 0033 00
FUEL LEVEL INDICATOR MALFUNCTIONS....WP 0034 00
HIGH BEAM INDICATOR LIGHT DOES NOT WORK....WP 0035 00
BATTERY/GENERATOR INDICATOR MALFUNCTIONS....WP 0036 00
PARKING BRAKE INDICATOR MALFUNCTIONS....WP 0037 00
COOLANT TEMP INDICATOR MALFUNCTIONS....WP 0038 00
STEERING LOCKED INDICATOR MALFUNCTIONS....WP 0039 00
ENGINE OIL LOW PRESSURE INDICATOR MALFUNCTIONS....WP 0040 00
TRANSMISSION OIL LOW PRESSURE INDICATOR MALFUNCTIONS....WP 0041 00
TRANS OIL HI TEMP INDICATOR MALFUNCTIONS....WP 0042 00
ENGINE COOLANT LOW LEVEL INDICATOR MALFUNCTIONS....WP 0043 00
TRANS FILTER CLOGGED INDICATOR MALFUNCTIONS....WP 0044 00

VENTILATION FANS

DRIVER'S VENTILATION FAN DOES NOT BLOW AIR....WP 0046 00
CREW VENTILATION FAN DOES NOT BLOW AIR....WP 0047 00

TRANSMISSION SYSTEM

VEHICLE MOVES WITH TRANSMISSION IN SL....WP 0049 00
VEHICLE DOES NOT MOVE IN ANY SHIFT LEVER POSITION....WP 0050 00
VEHICLE DRIFTS OR DOES NOT STEER....WP 0051 00
SERVICE AND/OR PARKING BRAKE WILL NOT HOLD VEHICLE....WP 0052 00
TRANSMISSION WILL NOT UPSHIFT OR SHIFTS ERRATICALLY IN 1-4 POSITION....WP 0053 00
TRANSMISSION DOES NOT DOWNSHIFT IN 1-4 POSITION....WP 0054 00
TRANSMISSION DOES NOT HOLD 1ST POSITION....WP 0055 00
TRANSMISSION DOES NOT HOLD 2ND POSITION....WP 0056 00
TRANSMISSION DOES NOT HOLD 3RD POSITION....WP 0057 00
TRANSMISSION DOES NOT REVERSE....WP 0058 00
TRANSMISSION DOES NOT PIVOT STEER....WP 0059 00
TRANSMISSION HIGH TEM INDICATOR COMES ON....WP 0060 00
TRANSMISSION OIL LOW PRESSURE INDICATOR COMES ON....WP 0061 00

STEERING SYSTEM

STEERING LOCK MALFUNCTIONS....WP 0063 00

BILGE PUMP SYSTEM

BILGE PUMP AND/OR LIGHT DON'T WORK....WP 0065 00

PERSONNEL HEATER SYSTEM

PERSONNEL HEATER MALFUNCTIONS....WP 0067 00

TACH/SPEEDOMETERS

SPEEDOMETER MALFUNCTIONS....WP 0069 00
TACHOMETER MALFUNCTIONS....WP 0070 00

STE/ICE TESTS

HOOK UP/REMOVE STE/ICE TEST SET TO DCA 6....WP 0071 00
STE/ICE TEST 10 ENGINE RPM....WP 0072 00
STE/ICE TEST 24 FUEL SUPPLY PRESSURE....WP 0073 00
STE/ICE TEST 25 FUEL RETURN PRESSURE....WP 0074 00
STE/ICE TEST 32 AIR BOX PRESSURE....WP 0075 00
STE/ICE TEST 67 BATTERY VOLTAGE....WP 0076 00
STE/ICE TEST 68 STARTER MOTOR VOLTAGE....WP 0077 00
STE/ICE TEST 69 STARTER NEGATIVE CABLE VOLTAGE DROP....WP 0078 00
STE/ICE TEST 70 STARTER SOLENOID VOLTAGE....WP 0079 00
STE/ICE TEST 71 STARTER CURRENT (AVERAGE)....WP 0080 00
STE/ICE TEST 72 STARTER CURRENT (FIRST PEAK)....WP 0081 00

STE/ICE TEST 73 BATTERY RESISTANCE AND STE/ICE TEST 75 BATTERY RESISTANCE CHANGE (PACK).....WP 0082 00
STE/ICE TEST 74 STARTER CIRCUIT RESISTANCE.....WP 0083 00
STE/ICE TEST 80 BATTERY CURRENT.....WP 0084 00
STE/ICE TEST 82 GENERATOR OUTPUT VOLTAGE.....WP 0085 00
STE/ICE TEST 83 GENERATOR FIELD VOLTAGE.....WP 0086 00
STE/ICE TEST 84 GENERATOR NEGATIVE CABLE VOLTAGE DROP.....WP 0087 00

STE/ICE DIAGNOSTIC TROUBLESHOOTING

STE/ICE BANK DISPLAY DIAGNOSTIC TROUBLESHOOTING.....WP 0088 00
STE/ICE CONFIDENCE TEST DIAGNOSTIC TROUBLESHOOTING.....WP 0089 00
STE/ICE TEST 10, 12 AND 13 DIAGNOSTIC TROUBLESHOOTING.....WP 0090 00
DCA BATTERY VOLTAGE DIAGNOSTIC TROUBLESHOOTING.....WP 0091 00
DCA CURRENT SHUNT DIAGNOSTIC TROUBLESHOOTING.....WP 0092 00
STE/ICE TEST 24 FUEL SUPPLY PRESSURE DIAGNOSTIC TROUBLESHOOTING.....WP 0093 00
STE/ICE TEST 25 FUEL RETURN PRESSURE DIAGNOSTIC TROUBLESHOOTING.....WP 0094 00
STE/ICE TEST 32 AIR BOX PRESSURE DIAGNOSTIC TROUBLESHOOTING.....WP 0095 00
STE/ICE TEST 68 STARTER MOTOR VOLTAGE DIAGNOSTIC TROUBLESHOOTING.....WP 0096 00
STE/ICE TEST 69 STARTER NEGATIVE CABLE VOLTAGE DROP DIAGNOSTIC TROUBLESHOOTING.....WP 0097 00
STE/ICE TEST 70 STARTER SOLENOID VOLTAGE DIAGNOSTIC TROUBLESHOOTING.....WP 0098 00
STE/ICE TEST 82 GENERATOR OUTPUT VOLTAGE DIAGNOSTIC TROUBLESHOOTING.....WP 0099 00
STE/ICE TEST 83 GENERATOR FIELD VOLTAGE DIAGNOSTIC TROUBLESHOOTING.....WP 0100 00
STE/ICE TEST 84 GENERATOR NEGATIVE CABLE VOLTAGE DROP DIAGNOSTIC TROUBLESHOOTING.....WP 0101 00

ENGINE OVERHEATS 0007 00

INITIAL SETUP:

Maintenance Level

Unit

Tools and Special Tools

General Mechanic's Tool Kit: Automotive (WP 0397 00, Item 64)
Pipe bushing, 1/4 ext to 1/8 int (WP 0397 00, Item 11)
Pipe Plug, 1/8 Inch (WP 0397 00, Item 33)
Radiator Test Kit (WP 0397 00, Item 59)

Personnel Required

Unit Mechanic 63T10
Helper (H)

References

TM 9-2350-366-10-1
TM 9-2350-366-10-2

Equipment Condition

Engine stopped (TD9-2350-366-10-1)
Vehicle blocked (TM 9-2350-366-10-1)
VISMOD access panels removed (WP 0307 00)
Engine access cover plate removed (WP 0308 00)
Driver's power plant access panels removed (WP 0312 00)
Traverse turret to access rear power plant panels (TM 9-2350-366-10-2)
Power plant rear access panels removed (WP 0309 00)

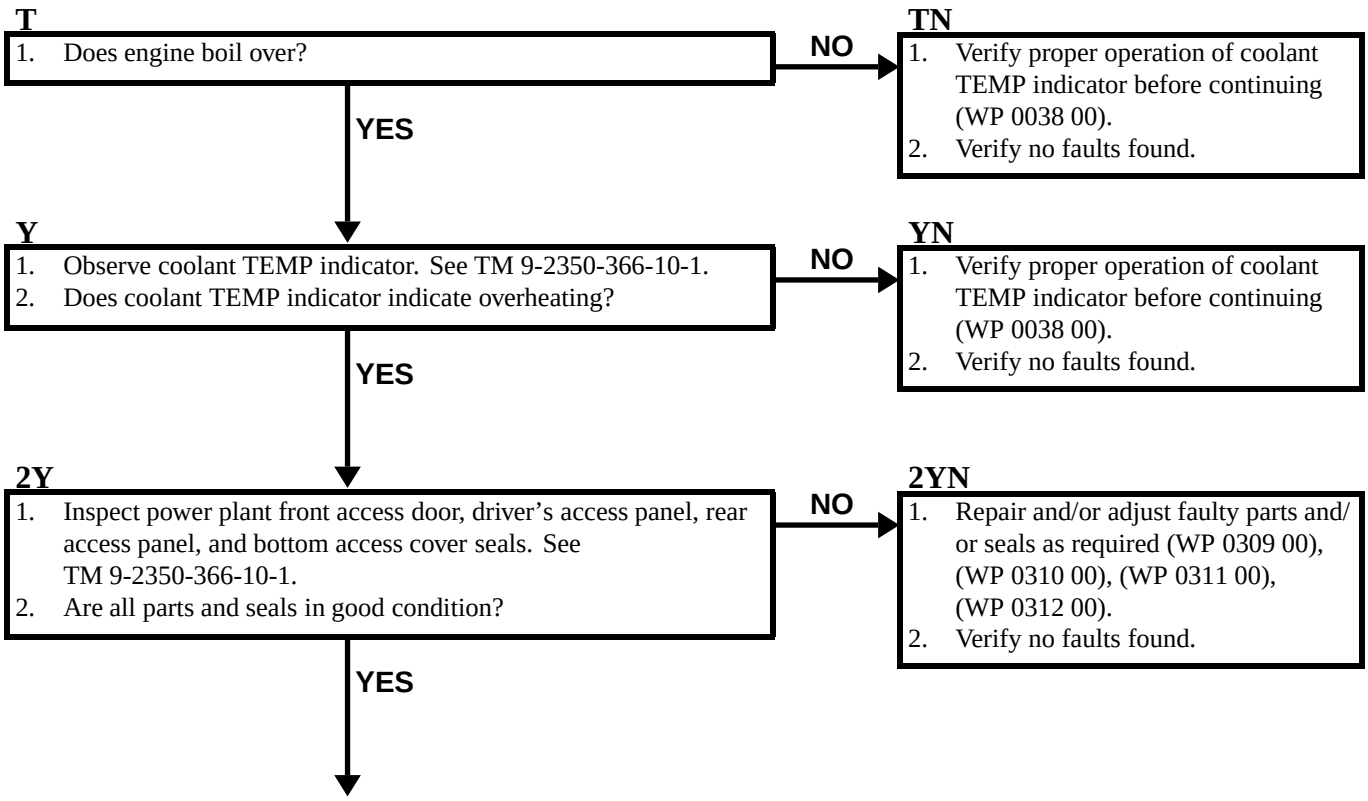

3Y

1. Inspect power unit coolant hoses, radiator, and fittings for leaks.
2. Is power unit free of coolant leaks?

NO

3YN

1. Repair cooling system leaks. See Table of Contents for this manual, Chapter 9 and Chapter 10.
2. Verify no faults found.

YES

4Y

1. Inspect engine coolant pump drive belt tension (WP 0167 00).
2. Is drive belt in good condition and in proper adjustment?

NO

4YN

1. Replace and/or adjust coolant pump belt (WP 0167 00), (WP 0168 00).
2. Verify no faults found.

YES

5Y

1. Inspect ventilating fan drive belt tension (WP 0167 00).
2. Is drive belt in good condition and in proper adjustment?

NO

5YN

1. Adjust ventilating fan drive belt (WP 0147 00) or replace ventilating fan drive belt. See (WP 0148 00).
2. Verify no faults found.

YES

6Y

WARNING

Moving parts of power unit can seriously injure you.

Clear personnel away from power unit before startup. Stay clear of moving parts when power unit is running.

1. Turn MASTER SWITCH to ON.
2. Start engine. See TM 9-2350-366-10-1.
3. Run engine until coolant temperature indicator reads 200 degrees.
4. Observe ventilating fan (1) operation.
5. Does ventilating fan rotate?

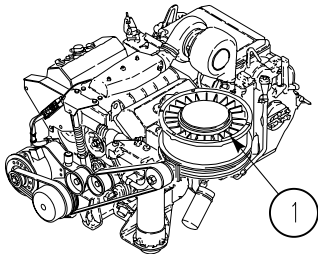

NO

GO TO **BY** (PAGE 0007 00-6)

YES

7Y

1. Engage thermostatic fan speed switch. See TM 9-2350-366-10-1.
2. Observe ventilating fan speed.
3. Does speed stay the same?

NO

7YN

1. Replace thermostatic fan speed switch. See (WP 0159 00).
2. Verify no faults found.

YES

8Y

1. Observe rotation of ventilating fan pulley (2) and generator pulley (1).
2. Is fan pulley rotating as fast as the generator pulley?

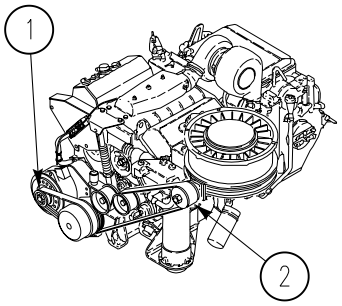

NO

8YN

1. Disengage thermostatic fan speed switch. See TM 9-2350-366-10-1.
2. Replace variable speed fan drive (WP 0178 00).
3. Verify no faults found.

YES

9Y

WARNING

Hot parts can burn you.

Allow parts to cool before working on or near them. If necessary, use heat protective gloves to work on hot parts.

1. Drain cooling system until auxiliary tank is empty (WP 0155 00).
2. Loosen hose clamp (1) on hose (2) at auxiliary tank (3).
3. Remove hose (2) and drain coolant from auxiliary tank (3). Use suitable container to catch coolant.
4. Install pipe plug (5) in hose (2) using hose clamp (1).
5. Remove elbow (4) from auxiliary tank (3).

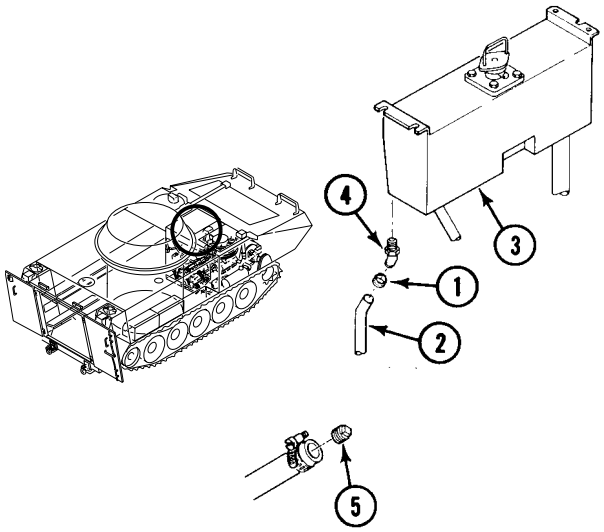

Continued

9Y Continued

6. Install bushing (6) on auxiliary tank (3).
7. Install radiator pressure tester (7) to bushing (6).
8. Pump system no higher than 15 psi pressure.
9. Does auxiliary tank filler cap relieve pressure between 13 and 15 psi pressure?

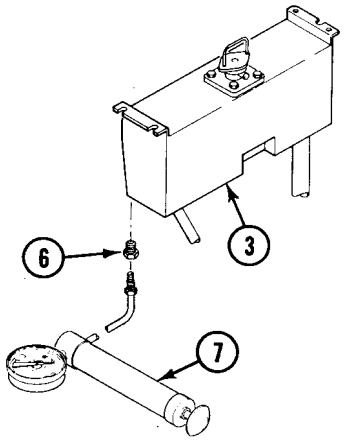

NO

9YN

1. Refill cooling system (WP 0155 00).
2. Replace auxiliary tank filler cap (WP 0157 00).
3. Verify no faults found.

YES

10Y

1. Allow system to remain at 13 to 15 psi pressure for five minutes.
2. Does pressure drop less than one psi?

NO

10YN

1. Internal coolant system leak. Beyond unit maintenance repair.
2. Notify supervisor.

YES

11Y

1. Replace coolant pump (WP 0169 00).
2. Verify no faults found.

BY

1. Engage thermostatic fan speed switch. See TM 9-2350-366-10-1.
2. Does fan still fail to rotate?

NO

BYN

1. Replace thermostatic fan speed switch (WP 0159 00).
2. Verify no faults found.

YES

B2Y

1. Stop engine. See TM 9-2350-366-10-1.
2. Remove ventilating fan drive belt WP 0148 00.
3. Manually rotate ventilating fan drive shaft pulley (1).
4. Does fan spin freely?

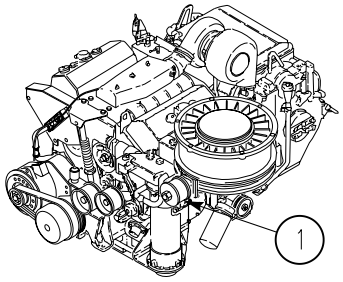

NO

B2YN

1. Faulty fan drive gearbox.
2. Notify supervisor.

YES

B3Y

1. Manually rotate adjustable (1) and non adjustable (2) ventilating fan drive idler pulleys.
2. Do pulleys spin freely?

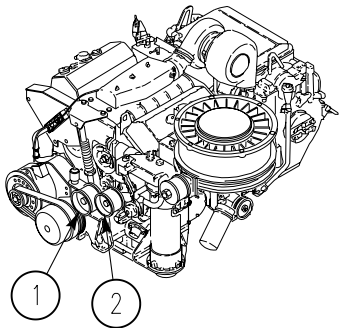

NO

B3YN

1. Replace adjustable and/or non adjustable idler pulleys (WP 0168 00).
2. Verify no faults found.

YES

B4Y

1. Replace variable speed fan drive unit (WP 0178 00).
2. Verify no faults found.

ENGINE DOESN'T CRANK 0008 00

INITIAL SETUP:

Maintenance Level

Unit

Tools and Special Tools

General Mechanic's Tool Kit: Automotive (WP 0397 00, Item 64)
Ste/Ice Test Set (WP 0397 00, Item 60)
Electrical Tool Kit (WP 0397 00, Item 63)
Socket Wrench Set (WP 0397 00, Item 71)

Personnel Required

Unit Mechanic 63T10
Helper (H)

References

TM 9-2350-366-10-1
TM 9-4910-751-12&P

Equipment Condition

Engine stopped (TM 9-2350-366-10-1)
Vehicle blocked (TM 9-2350-366-10-1)
STE/ICE VTM hooked up to DCA 6 (WP 0071 00)
Front VISMOD access panels removed (WP 0307 00)
Engine access cover plate removed (WP 0308 00)
Driver's power plant access panel removed (WP 0312 00)

T

1. Perform STE/ICE test 67, battery voltage (engine off) (WP 0076 00).
2. Does VTM read 22 volts or more?

NO → **TN**

1. Service vehicle batteries. See TM 9-2350-366-10-1.
2. Verify no faults found

YES

Y

1. Perform STE/ICE test 68, starter positive terminal voltage (WP 0077 00).
2. Does VTM read 17 volts or more?

NO → GO TO **BY** (PAGE 0008 00-3)

YES

2Y

WARNING

Ensure FUEL SHUT-OFF handle is in OFF position. Engine could start during performance of step 1. Personnel could be injured. Stay clear of possible moving parts.

1. Manually rotate engine crankshaft pulley (1). Use breaker bar, extension, and socket.
2. Does engine rotate?

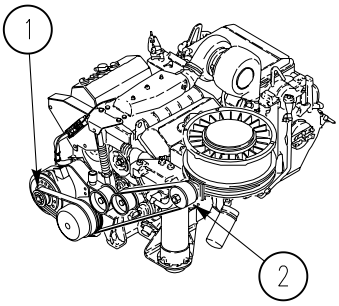

NO →

2YN

1. Engine or transmission seized. Beyond unit maintenance repair.
2. Notify supervisor.

YES ↓

3Y

1. Replace starter assembly (WP 0115 00).
2. Verify no faults found.

BY

1. Inspect harness 12349873 circuit 6 (1) and 6A (2) terminal ends on starter for corrosion and/or damage.
2. Remove harness 12349873 circuit 6/6A plug (3) from harness 12349881 jack (4) at carrier bulkhead.
3. Inspect condition of plug and jack pins.
4. Are all parts free from corrosion and damage?

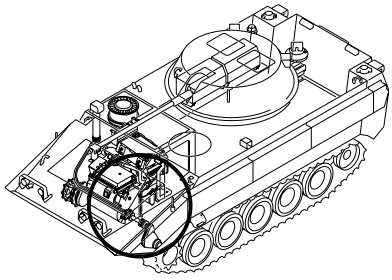

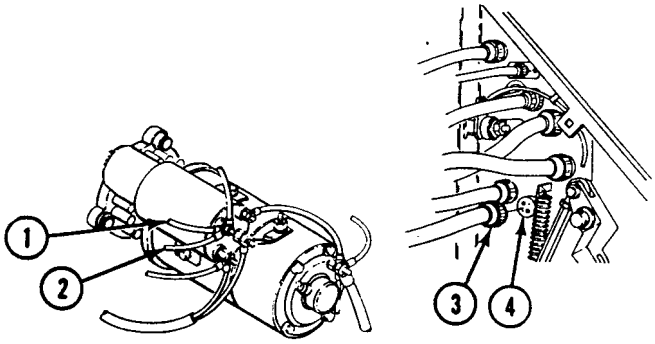

NO

BYN

1. Clean and repair wiring harness parts as required (WP 0189 00).
2. Verify no faults found.

YES

B2Y

1. Install harness 12349873 circuit 6/6A plug to harness 12349881 jack at carrier bulkhead.
2. Perform STE/ICE test 70, starter solenoid voltage (WP 0079 00).
3. Does VTM read less than 17 volts?

NO

B2YN

1. Replace starter assembly (WP 0115 00).
2. Verify no faults found.

YES

B3Y

1. Turn MASTER SWITCH to ON.
2. Is STEERING LOCKED indicator ON?

NO

GO TO **CY** (PAGE 0008 00-7)

YES

B4Y

1. Set up STE/ICE test 91. See TM 9-4910-751-12&P.
2. Remove nut (2), lockwasher (3), and lead 12349942 circuit 74A (1) from starter relay (4).
3. Measure resistance between lead 12349942 circuit 74A (1) and ground.
4. Does VTM read 0 ohms?

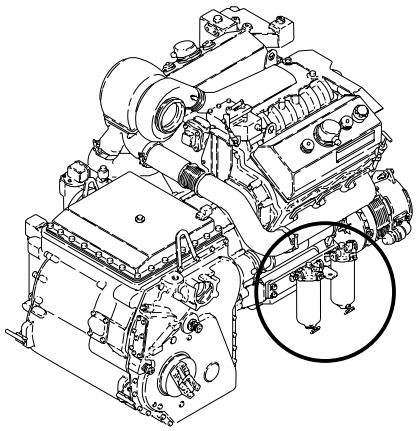

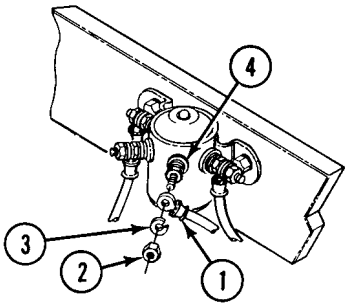

NO

B4YN

1. Replace lead 12349942 (WP 0189 00).
2. Verify no faults found.

YES

B5Y

1. Set up STE/ICE test 89. See TM 9-4910-751-12&P.
2. Install lead 12349942 circuit 74A on starter relay.
3. Measure voltage between circuit 74 post (1) and circuit 74A post (2) on starter relay with START button depressed.
4. Does VTM read less than 22 volts?

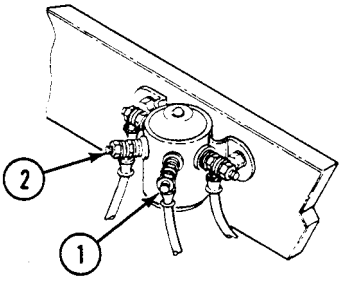

NO → GO TO **DY** (PAGE 0008 00-8)

YES

B6Y

1. Remove harness 12349873 plug (1) from harness 12349881 jack (2) at carrier bulkhead.
2. Measure voltage between harness 12349881 jack (2) socket H (3) and ground with START button depressed.
3. Does VTM read less than 22 volts?

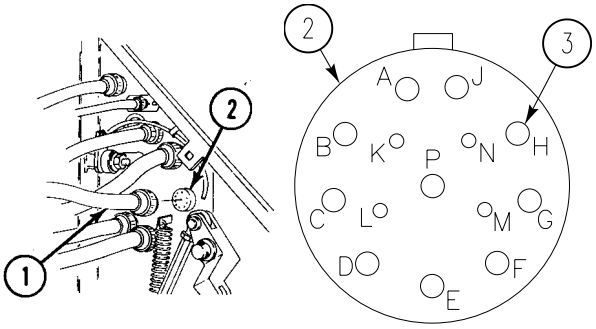

NO → **B6YN**

1. Faulty harness 12349873 circuit 74.
2. Notify supervisor.

YES

B7Y

1. Set up STE/ICE test 91. See TM 9-4910-751-12&P.
2. Remove instrument panel for access (WP 0211 00).
3. Remove harness 12349881 plug (1) from start switch jack (2).
4. Measure resistance between start switch jack (2) pins with START button depressed.
5. Does VTM read 0 ohms?

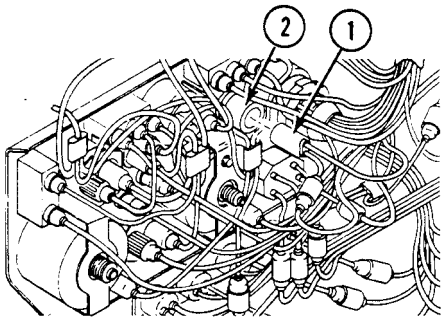

NO →

B7YN

1. Install harness 12349873 plug on harness 12349881 jack.
2. Replace engine start switch (WP 0256 00).
3. Verify no faults found.

YES ↓

B8Y

1. Remove harness 12349813 circuit 14B plug (1) from harness 12349881 circuit 14 jack (2).
2. Measure resistance between harness 12349881 circuit 14 jack (2) and circuit 14 plug (3).
3. Does VTM read 0 ohms?

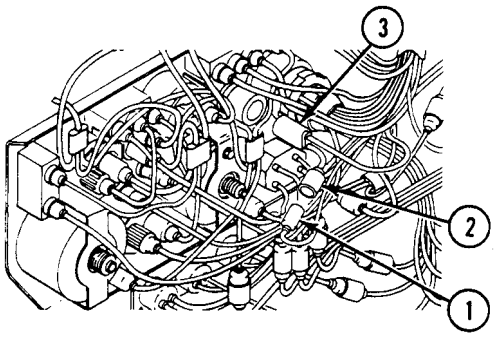

NO →

B8YN

1. Install harness 12349873 plug on harness 12349881 jack.
2. Repair harness 12349881 circuit 14 (WP 0189 00).
3. Install instrument panel (WP 0220 00).
4. Verify no faults found.

YES ↓

B9Y

1. Install harness 12349813 plug on harness 12349881 circuit 14 jack.
2. Repair harness 12349881 circuit 74 (WP 0189 00).
3. Install instrument panel (WP 0220 00).
4. Verify no faults found.

CY

1. Turn MASTER SWITCH to OFF.
2. Set up STE/ICE test 91. See TM 9-4910-751-12&P.
3. Remove transmission controller (WP 0266 00).
4. Place transmission controller in SL position.
5. Measure resistance between pin M (2) and pin N (3) on controller jack (1).
6. Does VTM read 0 ohms?

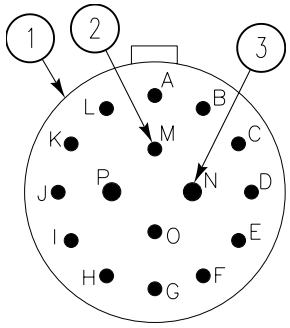

NO

CYN

1. Replace transmission controller (WP 0266 00).
2. Verify no faults found.

YES

C2Y

1. Go to STEERING LOCKED indicator malfunctions (WP 0039 00).

ENGINE DOESN'T CRANK—Continued **0008 00**

DY

1. Measure voltage between starter relay circuit 74C post (1) and ground.
2. Does VTM read 22 volts or more?

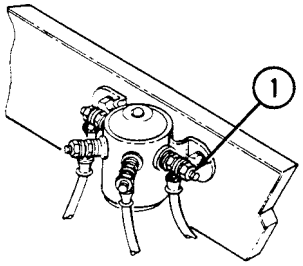

NO →

DYN

1. Replace lead 12349943-1 (WP 0189 00).
2. Verify no faults found.

YES ↓

D2Y

1. Set up STE/ICE test 91. See TM 9-4910-751-12&P.
2. Measure resistance between starter relay circuit 74D terminal (1) and starter solenoid circuit 74D terminal (2).
3. Does VTM read 0 ohms?

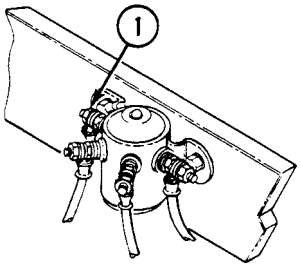

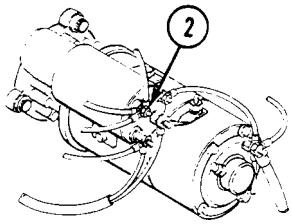

NO →

D2YN

1. Replace lead 12349943-2 (WP 0189 00).
2. Verify no faults found.

YES ↓

D3Y

1. Replace starter relay (WP 0256 00).
2. Verify no faults found.

ENGINE DOES NOT START (COLD WEATHER ONLY) 0009 00

INITIAL SETUP:

Maintenance Level

Unit

Tools and Special Tools

Unit Mechanic's Tool Kit: Automotive (WP 0397 00, Item 64)
Multimeter (WP 0397 00, Item 30)

Personnel Required

Unit Mechanic 63T10
Helper (H)

References

TM 9-2350-366-10-1

Equipment Condition

Engine stopped (TM 9-2350-366-10-1)

Vehicle blocked (TM 9-2350-366-10-1)

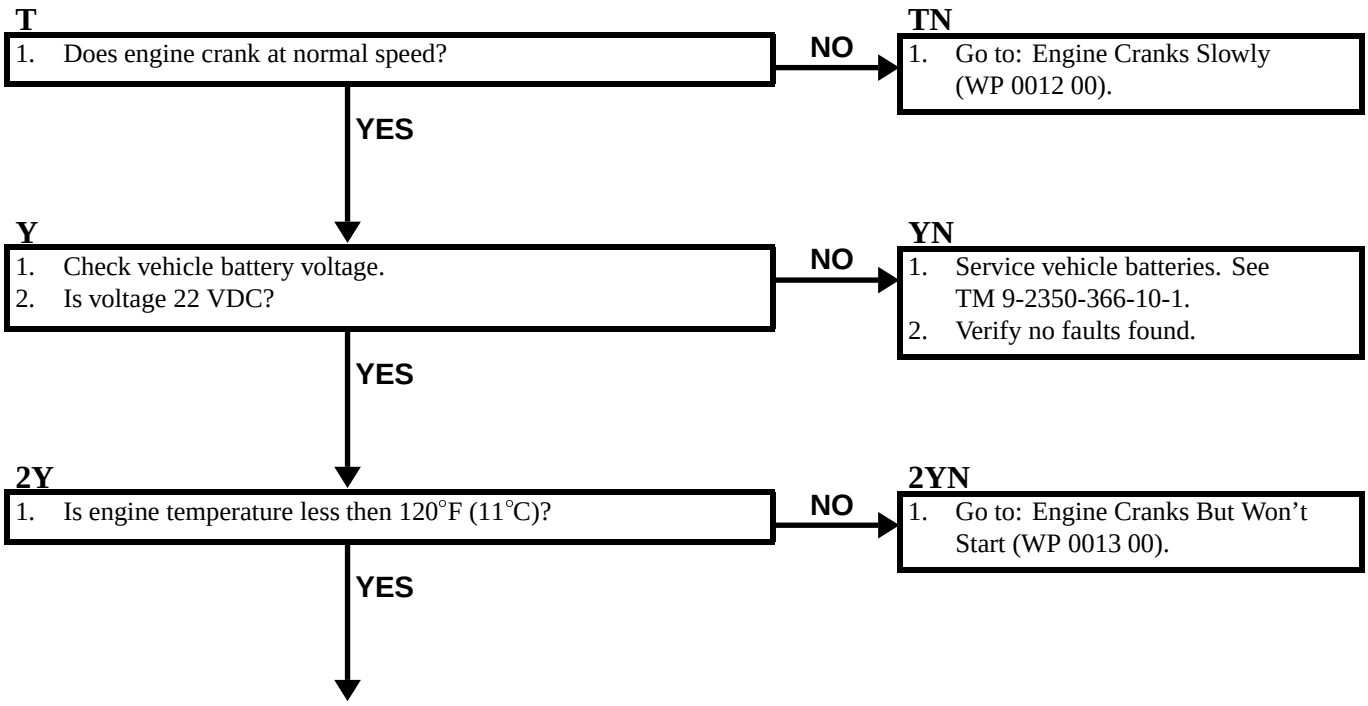

3Y

1. Turn MASTER SWITCH to ON. See TM 9-2350-366-10-1.
2. Momentarily turn GLOW PLUG switch (1) ON.
3. Does WAIT indicator (2) light bulb work?

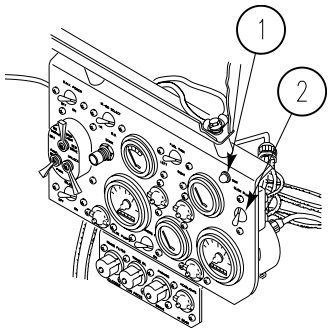

NO

3YN

1. Turn MASTER SWITCH to OFF. See TM 9-2350-366-10-1.
2. Go to: Wait Indicator Doesn't Light (WP 0011 00).
3. Verify no faults found.

YES

4Y

1. After 35 seconds, did WAIT indicator start flashing?

NO

4YN

1. Replace glow plug controller (WP 0127 00).
2. Verify no faults found.

YES

5Y

1. Is throttle/engine speed set to idle speed?

NO

5YN

1. Push hand throttle in as far as it will go.
2. Do no touch foot throttle.
3. Repeat glow plug cold start procedure (WP 0126 00).

YES

6Y

1. Turn MASTER SWITCH to OFF. See TM 9-2350-366-10-1.
2. Disconnect glow plug harness lead (1) from glow plug (2).
3. Place multimeter red lead on glow plug and black lead on engine cylinder head.
4. Is resistance less than 3 to 10 ohms?

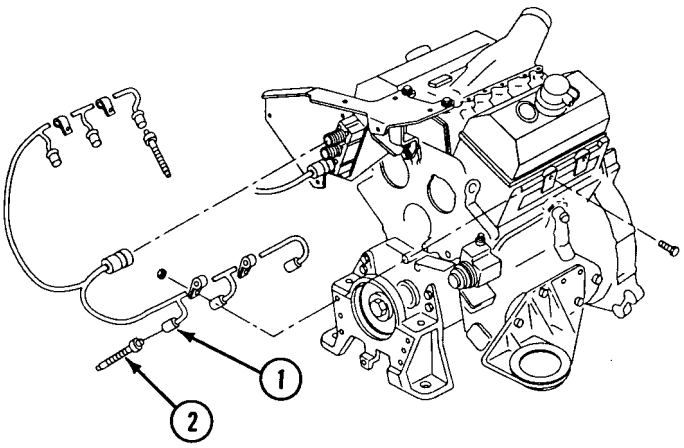

NO →

6YN

1. Replace glow plugs that are not within 3 to 10 ohms range (WP 0126 00).
2. Verify no faults found.

YES ↓

7Y

1. Remove engine wiring harness 12349873-1 (1) from J2 connector on controller (2).
2. Remove engine wiring harness 12349873-1 (1) jack (3) from engine compartment bulkhead (4).
3. Check continuity between engine compartment jack (3) pin K (5) and controller plug (6) pin A (7).
4. Does multimeter read 0 ohm?

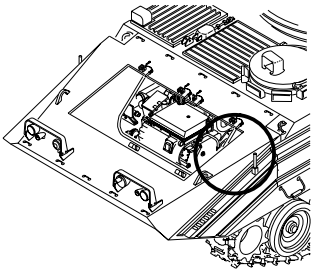

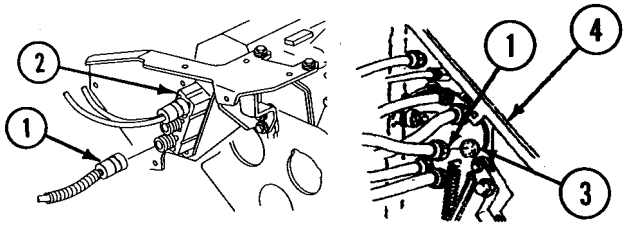

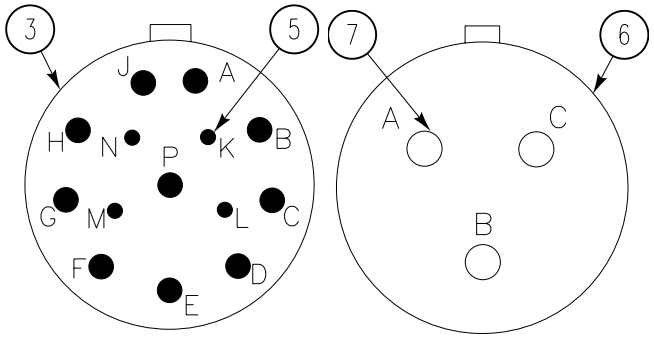

NO

7YN

1. Replace engine harness 12349873-1 circuit 406A lead (WP 0191 00).

YES

8Y

1. Remove front main wiring harness 12349881-2 plug (1) from engine compartment bulkhead (2).
2. Check continuity from plug pin K (3) to WAIT indicator (4) positive terminal.
3. Does multimeter read 0 ohm?

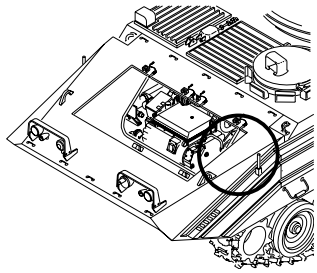

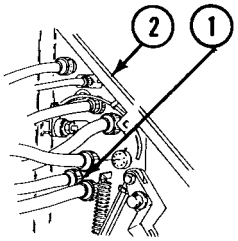

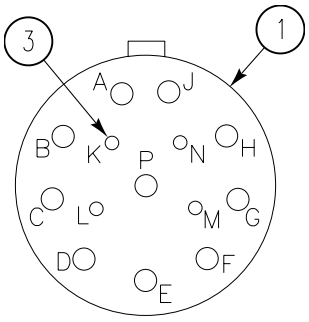

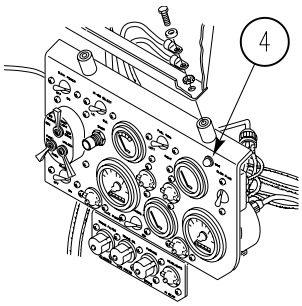

NO

8YN

1. Faulty main wiring harness 12349881-3.
2. Notify your supervisor.

YES

9Y

NOTE

If engine must be started, use manual override procedure. See TM 9-2350-366-10-1.

1. Replace glow plug controller (WP 0127 00).
2. Verify no faults found.

WAIT INDICATOR FLASHES DURING START ATTEMPTS (PREGLOW OR AFTERGLOW) 0010 00

INITIAL SETUP:

Maintenance Level

Unit

Tools and Special Tools

General Mechanic's Tool Kit: Automotive (WP 0397 00, Item 64)
Multimeter (WP 0397 00, Item 30)

Personnel Required

Unit Mechanic 63T10
Helper (H)

References

TM 9-2350-366-10-1

Equipment Condition

Engine stopped (TM 9-2350-366-10-1)

Vehicle blocked (TM 9-2350-366-10-1)

Battery ground strap disconnected (WP 0237 00)

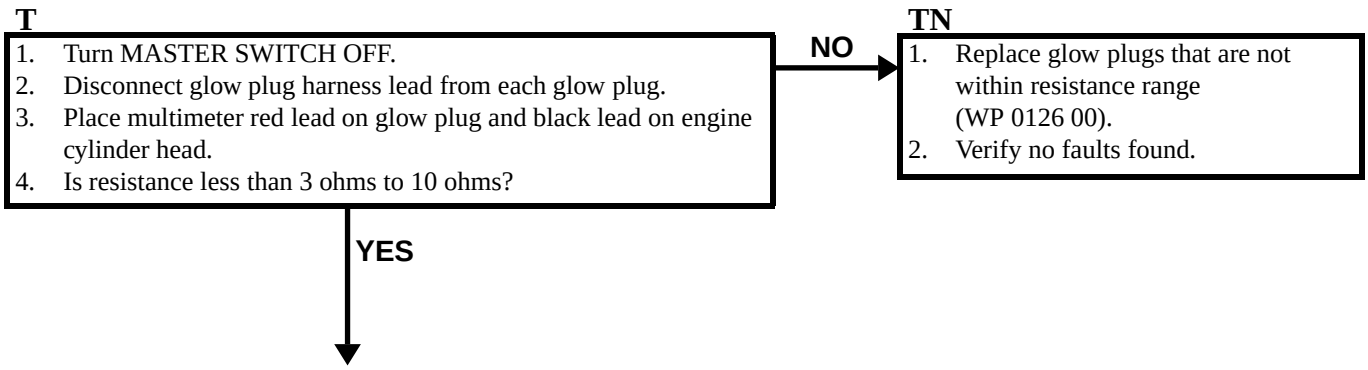

WAIT INDICATOR FLASHES DURING START ATTEMPTS (PREGLOW OR AFTERGLOW)—Continued **0010 00**

Y

1. Remove front main wiring harness 12349873-1 (1) from J2 connector on controller (2).
2. Remove engine wiring harness 12349873-1 jack (3) from engine compartment bulkhead jack (4).
3. Check continuity between engine compartment jack (4) pin K (5) and controller plug (6) pin A (7).
4. Does multimeter read 0 ohm?

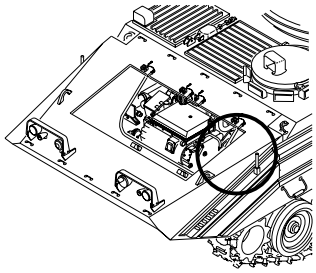

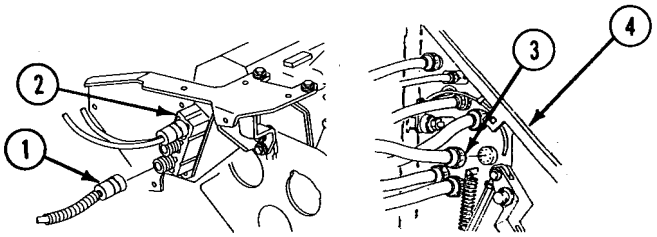

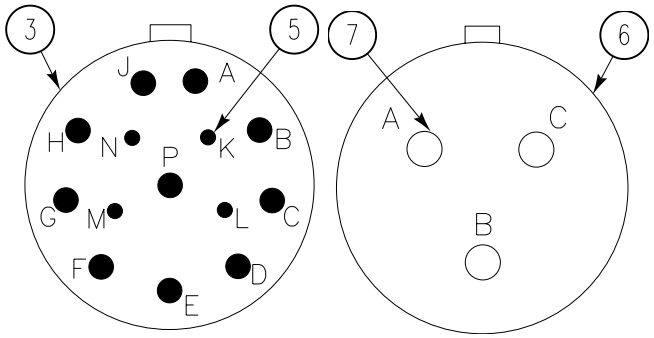

NO → **YN**

1. Repair or replace engine wiring harness 12349873-1 circuit 406A lead (WP 0191 00).
2. Verify no faults found.

YES

WAIT INDICATOR FLASHES DURING START ATTEMPTS (PREGLOW OR AFTERGLOW)—Continued **0010 00**

2Y

1. Remove front main wiring harness 12349881-3 plug (1) from engine compartment bulkhead (2).
2. Check continuity from plug (1) pin K (3) to WAIT indicator (4) positive terminal.
3. Does multimeter read 0 ohm?

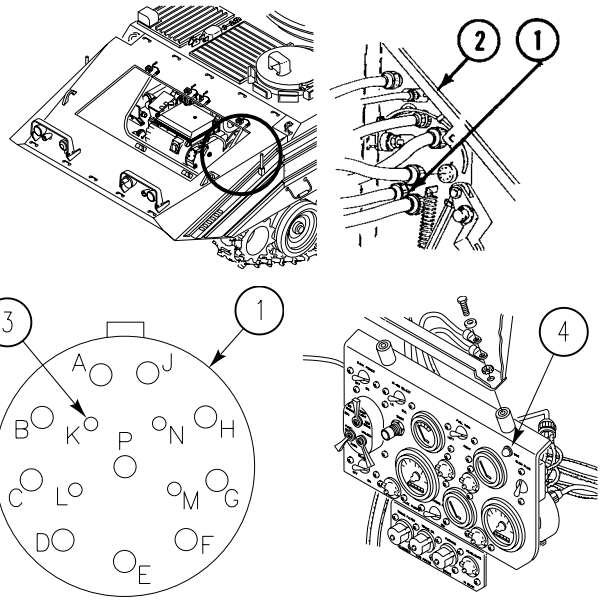

NO →

2YN

1. Faulty front main wiring harness 12349881-3.
2. Notify supervisor.

YES ↓

3Y

1. Replace glow plug controller (WP 0127 00).
2. Verify no faults found.

WAIT INDICATOR LIGHT DOESN'T LIGHT 0011 00

INITIAL SETUP:

Maintenance Level

Unit

Tools and Special Tools

General Mechanic's Tool Kit: Automotive (WP 0397 00, Item 64)
Multimeter (WP 0397 00, Item 30)

Personnel Required

Unit Mechanic 63T10
Helper (H)

References

TM 9-2350-366-10-1

Equipment Condition

Engine stopped (TM 9-2350-366-10-1)

Vehicle blocked (TM 9-2350-366-10-1)

T

1. Is MASTER SWITCH on?

NO

TN

1. Turn MASTER SWITCH on.
2. Verify no faults found.

YES

Y

1. Turn MASTER SWITCH to OFF.
2. Remove instrument panel for access (WP 0309 00).
3. Remove circuits 406 (1) and 27C (2) plugs from GLOW PLUG switch jacks (3) and (4).
4. Measure resistance between switch jacks (3) and (4) with GLOW PLUG switch depressed.
5. Does multimeter read 0 ohm?

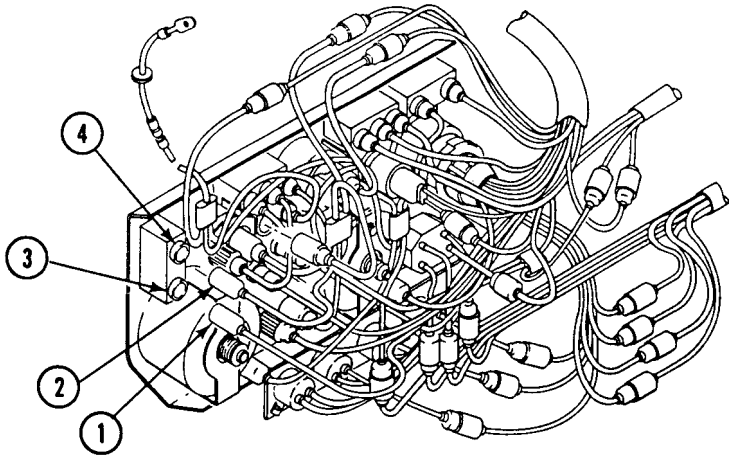

NO

YN

1. Replace GLOW PLUG switch (WP 0247 00).
2. Verify no faults found.

YES

2Y

1. Remove circuit 27 plug (1) from instrument panel circuit breaker (2).
2. Measure resistance between cable assembly 12349858 circuit 27 (1) and 27C (3) plug pins.
3. Does multimeter read 0 ohm?

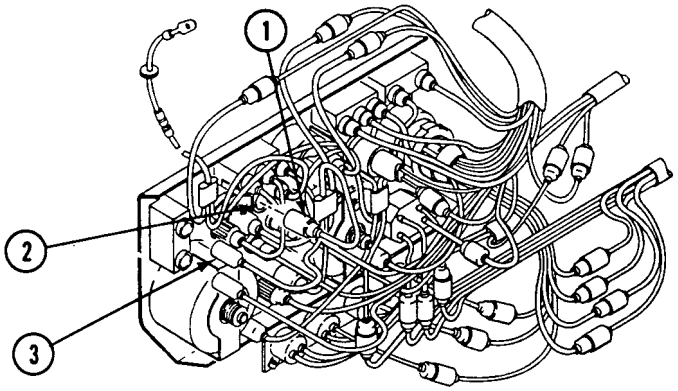

NO

2YN

1. Repair special purpose cable 12349858 circuit 27C/27 (WP 0189 00).
2. Verify no faults found.

YES

3Y

1. Check circuit 406B lead (1).
2. Is circuit 406B lead grounded to instrument panel mount?

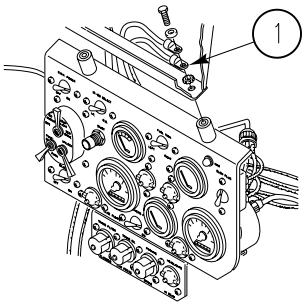

NO

3YN

1. Ground circuit 406B lead to instrument panel mount and tighten screw.
2. Verify no faults found.

YES

4Y

1. Remove knurled nut from WAIT indicator (1) and instrument panel (2).
2. Remove WAIT indicator (1) from instrument panel (2).
3. Check resistance between WAIT indicator's terminals.
4. Does multimeter read approximately 240 ohms of resistance?

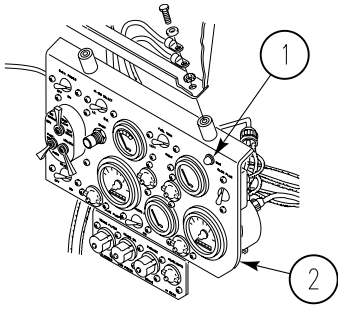

NO →

4YN

1. Faulty WAIT indicator on wiring harness 12349881-3.
2. Notify supervisor.

YES ↓

5Y

1. Check circuit 406B lead (1) for continuity.
2. Does multimeter read 0 ohm?

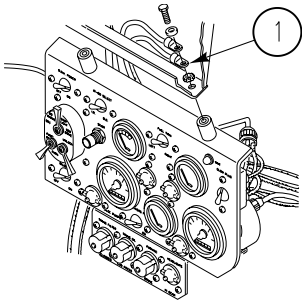

NO →

5YN

1. Faulty circuit 406B lead on wiring harness 12349881-3.
2. Notify supervisor.

YES ↓

6Y

1. Check between WAIT indicator's (1) negative terminal and upper instrument panel support (2) for continuity.
2. Does multimeter read 0 ohm?

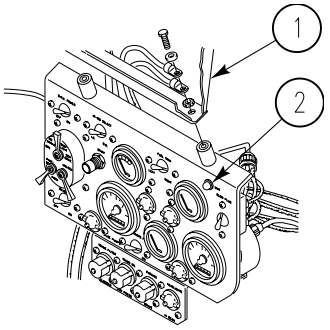

NO

6YN

1. Tighten screw securing instrument panel to support.
2. Verify no faults found

YES

7Y

1. Remove front main wiring harness 12349881-3 plug (1) from engine compartment bulkhead (2).
2. Check continuity from plug pin K (3) to WAIT indicator (4) positive terminal.
3. Does multimeter read 0 ohm?

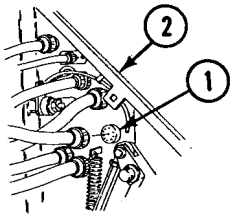

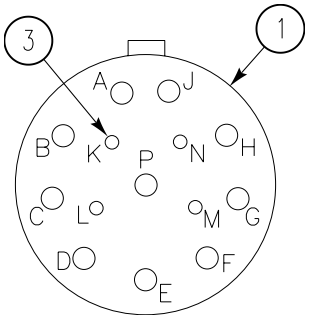

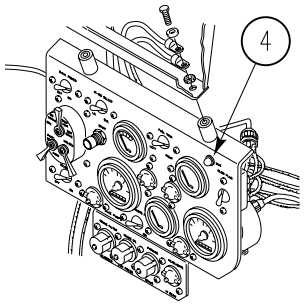

NO

7YN

1. Faulty front main wiring harness 12349881-3.
2. Notify supervisor.

YES

8Y

1. Remove engine wiring harness 12349873-1 plug (1) from engine compartment bulkhead (2).
2. Disconnect plug (3) from glow plug controller (4).
3. Check continuity between engine wiring harness 12349873-1 plug (1) pin K (5) and plug (3) pin A (6).
4. Does multimeter read 0 ohm?

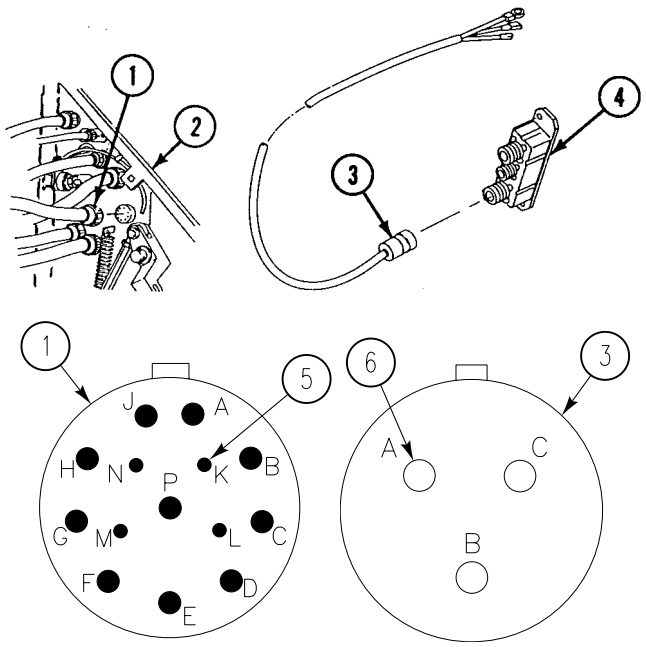

NO

8YN

1. Replace engine wiring harness 12349873-1 circuit 406A lead (WP 0189 00).
2. Verify no faults found.

YES

9Y

1. Replace glow plug controller (WP 0127 00).
2. Verify no faults found.

ENGINE CRANKS SLOWLY 0012 00

INITIAL SETUP:

Maintenance Level

Unit

Tools and Special Tools

General Mechanic's Tool Kit: Automotive (WP 0397 00, Item 64)
Ste/Ice Test Set (WP 0397 00, Item 60)

Personnel Required

Unit Mechanic 63T10
Helper (H)

References

TM 9-2350-366-10-1

Equipment Condition

Engine stopped (TM 9-2350-366-10-1)

Vehicle blocked (TM 9-2350-366-10-1)

T

1. Perform STE/ICE test 67 battery voltage (WP 0076 00).
2. Does VTM read 22 volts or more?

NO → **TN**

1. Clean, inspect, or replace carrier batteries (WP 0239 00).
2. Verify no faults found.

YES

Y

1. Repeat STE/ICE test 67 with engine cranking for 3 to 5 seconds (WP 0076 00).
2. Does VTM read 19.2 volts or more?

NO → **YN**

1. Go to STE/ICE test 73/75 (WP 0082 00) .
2. Verify no faults found.

YES

2Y

1. Perform STE/ICE test 68 starter positive terminal voltage (WP 0077 00).
2. Does VTM read 19.2 volts or more?

NO → GO TO **BY** (PAGE 0012 00-3)

YES

ENGINE CRANKS SLOWLY—Continued **0012 00**

3Y

1. Perform STE/ICE test 69 starter negative cable voltage drop (WP 0078 00).
2. Does VTM read 0.5 volts or less?

NO →

3YN

1. Repair ground straps as necessary (WP 0189 00); or replace starter ground strap (WP 0115 00), or replace ground strap from battery to shunt (WP 0238 00), or replace ground strap from shunt to hull (WP 0386 00).
2. Verify no faults found.

YES ↓

4Y

1. Replace starter (WP 0115 00).
2. Verify no faults found.

BY

1. Remove cap (1) from slave receptacle (2).
2. Measure voltage at slave receptacle (2) on master switch panel with engine cranking for 3 to 5 seconds.
3. Does VTM read less than 19.2 volts?

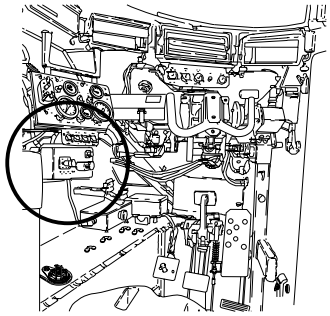

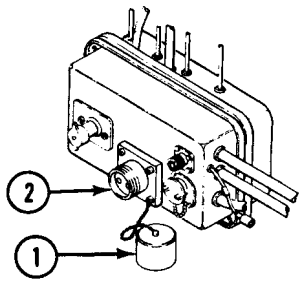

NO → GO TO **CY** (PAGE 0012 00-4)

YES

B2Y

1. Remove master switch panel (WP 0246 00).
2. Inspect terminal end on lead 12349945-1 (1) on switch (2).
3. Is terminal end free from corrosion and/or other damage?

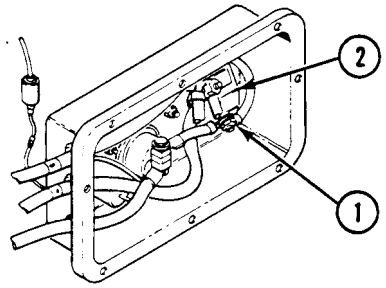

NO → **B2YN**

1. Repair lead (WP 0189 00) or replace lead (WP 0241 00).
2. Verify no faults found.

YES

B3Y

1. Replace MASTER SWITCH (WP 0245 00).
2. Verify no faults found.

CY

1. Remove VISMOD panels (WP 0307 00) and engine access cover plate (WP 0308 00).
2. Remove harness 12349873 circuit 6/6A plug (1) from harness 12349881 circuit 6/6A jack (2) at vehicle bulkhead.
3. Inspect plug and jack for corrosion or other damage.
4. Are parts in good condition?

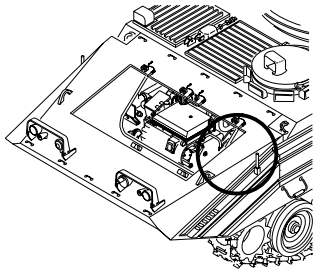

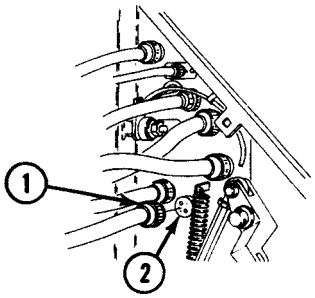

NO

CYN

1. Faulty plug and or jack.
2. Notify supervisor.

YES

C2Y

1. Install harness 12349873-1 circuit 6/6A plug on harness 12349881 circuit 6/6A jack at vehicle bulkhead.
2. Inspect harness 12349873 circuit 6 (1) and circuit 6A (2) on starter.
3. Are terminal ends and leads free from corrosion or other damage?

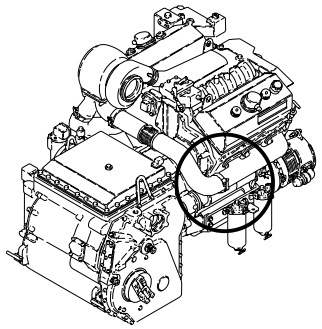

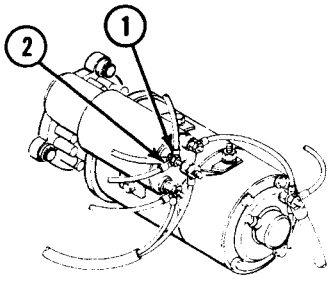

NO

C2YN

1. Repair harness 12349873 (WP 0189 00).
2. Verify no faults found.

YES

C3Y

1. Remove MASTER SWITCH panel (WP 0246 00).
2. Inspect lead 12350256-1 (1) from MASTER SWITCH to distribution box.
3. Are lead and lead end free from corrosion and damage?

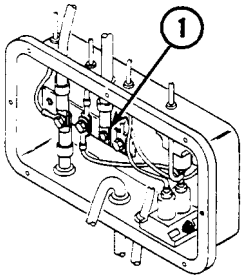

NO →

C3YN

1. Replace lead 12350256-1 (WP 0192 00).
2. Verify no faults found.

YES ↓

C4Y

1. Inspect harness 12349881-3 circuit 6 (1) and 6A (2) leads on distribution box.
2. Are leads and lead terminal ends free of corrosion and damage?

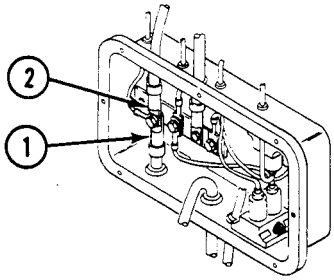

NO →

C4YN

1. Repair harness 12349881-3 circuit 6 and 6A (WP 0189 00).
2. Verify no faults found.

YES ↓

C5Y

1. Install MASTER SWITCH panel (WP 0246 00).
2. Replace starter assembly (WP 0115 00).
3. Verify no faults found.

ENGINE CRANKS BUT WILL NOT START 0013 00

INITIAL SETUP:

Maintenance Level

Unit

Tools and Special Tools

General Mechanic's Tool Kit: Automotive (WP 0397 00, Item 64)

Materials/Parts

Suitable Container

Personnel Required

Unit Mechanic 63T10
Helper (H)

References

TM 9-2350-366-10-1

Equipment Condition

Engine stopped (TM 9-2350-366-10-1)
Vehicle blocked (TM 9-2350-366-10-1)
Turret rotated to access power plant rear panel (TM 9-2350-366-10-2)
Driver's power plant access panels removed (WP 0312 00)
Power plant rear access panels removed (WP 0309 00)
Power plant access panel removed (WP 0308 00)

T

1. Inspect condition and operation of fuel cut off cable assembly.
2. Is cable assembly in good condition and in proper adjustment?

NO →

TN

1. Replace and/or adjust fuel cutoff cable assembly (WP 0381 00).
2. Verify no faults found.

YES ↓

Y

1. Disconnect engine fuel return line (2) from quick disconnect fitting (1).
2. Depress plunger on quick disconnect fitting (2). Catch fuel in suitable container.
3. (H): Crank engine with plunger depressed.
4. Does fuel flow out while cranking engine?

NO → GO TO **BY** (PAGE 0013 00-2)

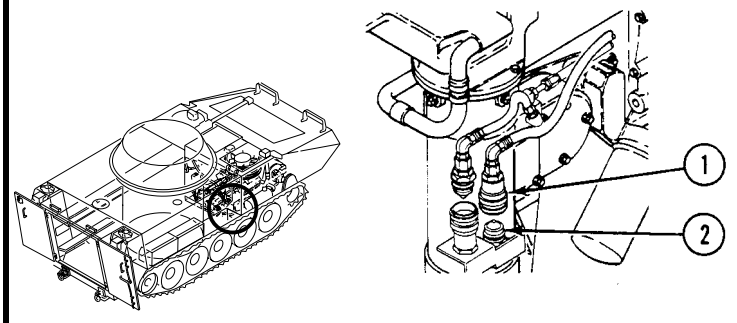

YES ↓

2Y

1. Drain fuel filters into suitable transparent container (WP 0133 00).
2. Inspect fuel in container.
3. Is fuel clean and uncontaminated?

NO

2YN

1. Drain external fuel tanks and refill with uncontaminated fuel (WP 0123 00).
2. Replace primary and secondary fuel filters (WP 0133 00).
3. Verify no faults found.

YES

3Y

1. Engine does not start. Beyond unit maintenance repair.
2. Notify supervisor.

BY

1. Disconnect engine fuel supply line (1) from quick disconnect fitting (2).
2. Manually depress plunger fuel supply line quick disconnect fitting (2).
3. Does fuel flow from fitting?

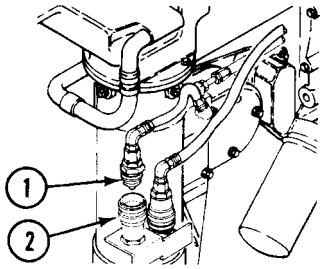

NO

GO TO **CY** (PAGE 0013 00-3)

YES

B2Y

1. Inspect fuel lines between hull supply line to primary filter.
2. Inspect fuel lines between primary filter to fuel pump.
3. Inspect fuel lines between fuel pump to secondary filter.
4. Inspect fuel lines between secondary filter to engine.
5. Are lines free of kinks and other damage?

NO

B2YN

1. Replace engine fuel lines as required (WP 0130 00)(WP 0131 00).
2. Verify no faults.

YES

B3Y

1. Replace fuel pump (WP 0374 00).
2. Verify no faults found.

CY

1. Remove rear compartment floor plates (WP 0343 00).
2. Inspect fuel lines between fuel tanks (1) and quick disconnect fittings (2).
3. Are all lines and fittings free from leaks and damage?

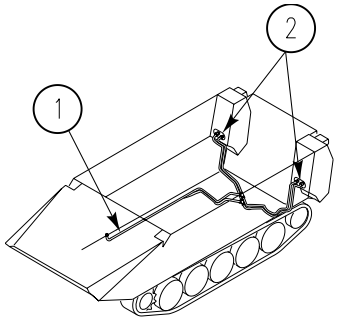

NO

CYN

1. Repair/replace fuel lines as required (WP 0130 00)(WP 0131 00).
2. Verify no faults found.

YES

C2Y

1. Clear clogged fuel pick up tubes in external tanks. See (WP 0123 00).
2. Verify no faults found.

ENGINE CRANKS BUT WON'T START BELOW 40°F (GLOW PLUGS ARE USED) 0014 00

INITIAL SETUP:

Maintenance Level

Unit

Tools and Special Tools

General Mechanic's Tool Kit: Automotive (WP 0397 00, Item 64)
Multimeter (WP 0397 00, Item 30)

Personnel Required

Unit Mechanic 63T10

References

TM 9-2350-366-10-1

Equipment Condition

Engine stopped (TM 9-2350-366-10-1)

Vehicle blocked (TM 9-2350-366-10-1)

T

1. Does engine crank at normal speed?

NO → **TN**

1. Go to Engine Cranks Slowly (WP 0012 00).

YES

Y

1. Is engine temperature less than 50°F (11°C)?

NO → **YN**

1. Go to Engine Cranks But Won't Start (WP 0013 00).

YES

2Y

1. Turn MASTER SWITCH on. See TM 9-2350-366-10-1.
2. Momentarily turn GLOW PLUG switch (2) on.
3. Does WAIT indicator (1) come on?

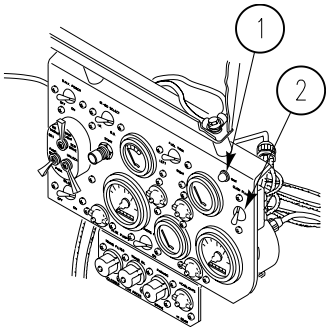

NO → **2YN**

1. Replace glow plug controller (WP 0127 00).
2. Verify no faults found.

YES

ENGINE CRANKS BUT WON'T START BELOW 40°F (GLOW PLUGS ARE USED)—Continued **0014 00**

3Y

1. After 35 seconds, did WAIT indicator start flashing?

NO → **3YN**

1. Replace glow plug controller (WP 0127 00).
2. Verify no faults found.

YES ↓

4Y

1. Push START switch and hold until engine starts.
2. Did engine start?

NO → **4YN**

1. Push hand throttle in as far as it will go. See TM 9-2350-366-10-1.
2. Do not touch foot throttle.
3. Repeat glow plug cold start procedure. See TM 9-2350-366-10-1.

YES ↓

5Y

1. Slowly pull hand throttle (1) out until engine speed reaches 1800 RPM.
2. Slowly push hand throttle (1) in until engine speed reaches 1000–1200 RPM.
3. Allow engine to reach normal operating temperature (190° to 230°F). See TM 9-2350-366-10-1.
4. Does engine run smoothly?

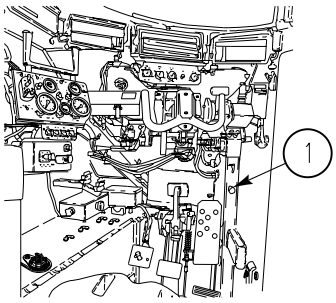

NO → **5YN**

1. Go to Engine Runs Rough, Stalls or Doesn't Put Out Full Power (WP 0015 00).
2. Verify no faults found.

YES ↓

6Y

1. Stop engine and try normal start. See TM 9-2350-366-10-1.
2. Verify no faults found.

ENGINE RUNS ROUGH, STALLS, OR DOES NOT PUT OUT FULL POWER 0015 00

INITIAL SETUP:

Maintenance Level
Unit

Tools and Special Tools
General Mechanic's Tool Kit: Automotive (WP 0397 00, Item 64)
Ste/Ice-R Test Set (WP 0397 00, Item 60)

Materials/Parts
Suitable Container

Personnel Required
Unit Mechanic 63T10
Helper (H)

References
TM 9-2350-366-10-1
TM 9-2350-366-10-2

Equipment Condition
Engine stopped (TM 9-2350-366-10-1)
Vehicle blocked (TM 9-2350-366-10-1)
Turret rotated to gain access to rear power plant access panel (TM 9-2350-366-10-2)
Power plant access panel removed (WP 0308 00)
Rear power plant access panels removed (WP 0309 00)
Rear turret floor plates removed (WP 0343 00)

T

1. Partially drain primary and secondary fuel filters into clean transparent containers. See TM 9-2350-366-10-1.
2. Is fuel free of contamination?

NO → **TN**

1. Drain fuel system and refill with uncontaminated fuel (WP 0123 00).
2. Replace filter elements (WP 0133 00).
3. Verify not faults found.

YES ↓

Y

1. Perform STE/ICE test 24 fuel supply pressure (WP 0073 00).
2. Does VTM read more than 55 psi?

NO → GO TO **BY** (PAGE 0015 00-2)

YES ↓

2Y

1. Perform STE/ICE test 25 fuel return pressure (WP 0074 00).
2. Is VTM display 20 psi or more?

NO → GO TO **CY** (PAGE 0015 00-3)

YES ↓

3Y

1. Perform STE/ICE test 32 air box pressure (WP 0075 00) with transmission selector in SL and engine at idle.
2. Repeat STE/ICE test 32 (WP 0075 00) at engine speeds of 1000 and 2000 RPM.
3. Does VTM give higher readings for higher RPM?

NO

3YN

1. Low air box pressure. Beyond unit maintenance repair.
2. Notify supervisor.

YES

4Y

1. Faulty engine governor. Beyond unit maintenance repair.
2. Notify supervisor.

BY

1. Inspect fuel lines between second fuel filter (1) and fuel tanks (2).
2. Are all lines and fittings free from kinks and leaks?

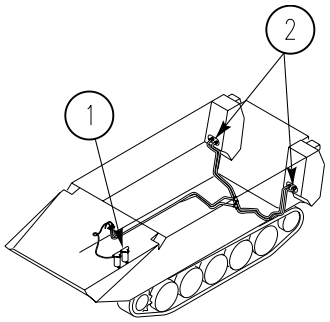

NO

BYN

1. Replace fuel lines and/or fittings as needed (WP 0130 00)(WP 0131 00).
2. Verify no faults found.

YES

B2Y

1. Disconnect engine fuel supply line (1) from quick disconnect fitting (2).
2. Manually depress plunger on fuel supply quick disconnect fitting (2).
3. Does fuel flow freely from fitting?

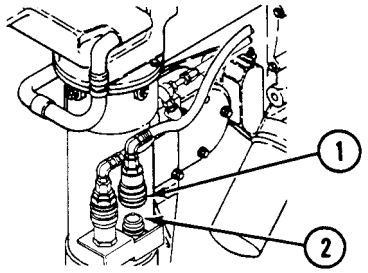

NO →

B2YN

1. Unclog fuel pick up tubes in fuel tanks TM 9-2350-366-10-1.
2. Verify no faults found.

YES ↓

B3Y

1. Replace engine fuel pump (WP 0116 00).
2. Verify no faults found.

CY

1. Inspect fuel lines on engine between secondary fuel filter and engine cylinder heads.
2. Inspect fuel lines on engine between right cylinder head and left cylinder head.
3. Inspect fuel lines on engine between engine cylinder head and restrictor block.
4. Are any fuel lines kinked or leaking?

NO →

CYN

1. Internal engine fuel restriction. Beyond unit maintenance repair.
2. Notify supervisor.

YES ↓

C2Y

1. Replace fuel lines as necessary (WP 0130 00), (WP 0131 00).
2. Verify no faults found.

GENERATOR MALFUNCTIONS AS INDICATED BY BATTERY/GENERATOR INDICATOR 0016 00

INITIAL SETUP:

Maintenance Level
Unit

Tools and Special Tools
Unit Mechanic's Tool Kit: Automotive (WP 0397 00, Item 64)
Ste/Ice-R Test Set (WP 0397 00, Item 60)
Jumper Wire

Personnel Required
Unit Mechanic 63T10
Helper (H)

References
TM 9-2350-366-10-1

Equipment Condition
Engine stopped (TM 9-2350-366-10-1)
Vehicle blocked (TM 9-2350-366-10-1)
Front VISMOD access panels removed (WP 0307 00)
Power plant access panel removed (WP 0308 00)
Driver's power plant access panel removed (WP 0312 00)

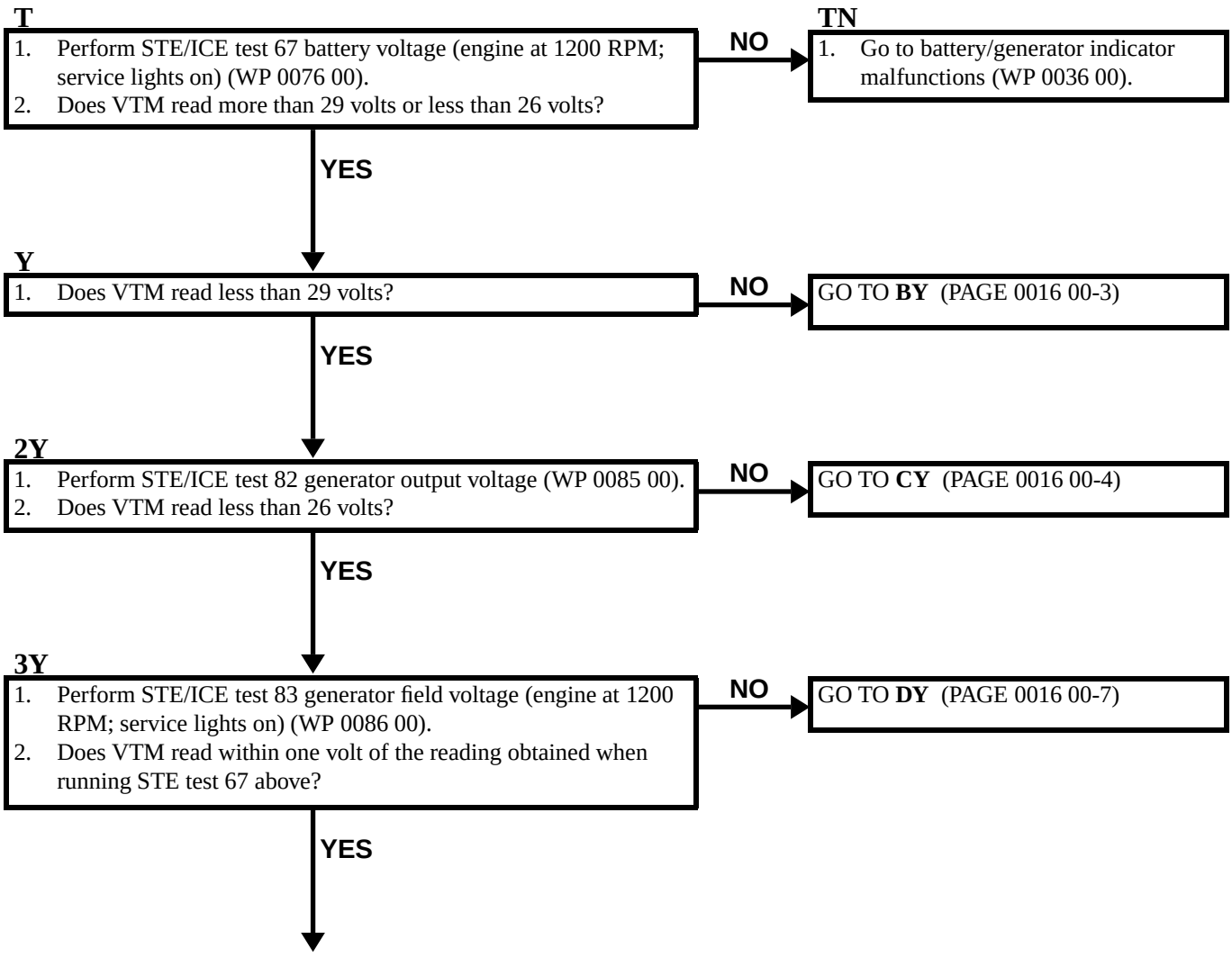

GENERATOR MALFUNCTIONS AS INDICATED BY BATTERY/GENERATOR INDICATOR—Continued **0016 00**

4Y

1. Disconnect battery ground strap (WP 0237 00).
2. Remove harness 12349873-1 plug (1) from generator jack (2).
3. Inspect harness plug pins for corrosion or damage.
4. Is plug free from corrosion or damage?

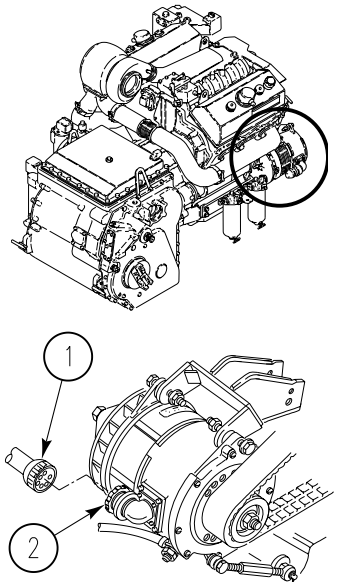

NO

4YN

1. Replace harness (WP 0191 00).
2. Verify no faults found.

YES

5Y

1. Replace generator (WP 0171 00).
2. Verify no faults found.

GENERATOR MALFUNCTIONS AS INDICATED BY BATTERY/GENERATOR INDICATOR—Continued **0016 00**

BY

1. Measure resistance between regulator housing (1) and ground. Use VTM.
2. Does VTM read 0 ohms?

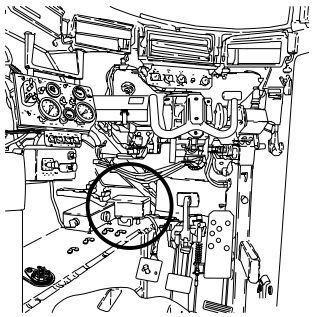

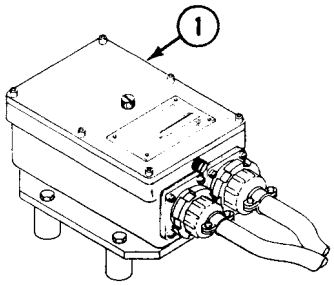

NO →

BYN

1. Remove regulator (WP 0177 00). Clean ground contact (bolted surface).
2. Install regulator (WP 0177 00).
3. Verify no faults found.

YES ↓

B2Y

1. Has regulator been adjusted?

NO →

B2YN

1. Adjust voltage regulator (WP 0176 00).
2. Verify no faults found.

YES ↓

B3Y

1. Has regulator been replaced?

NO →

B3YN

1. Replace regulator (WP 0177 00).
2. Verify no faults found.

YES ↓

B4Y

1. Replace generator (WP 0171 00).
2. Verify no faults found.

GENERATOR MALFUNCTIONS AS INDICATED BY BATTERY/GENERATOR INDICATOR—Continued **0016 00**

CY

1. Disconnect battery ground strap (WP 0237 00).
2. Remove harness 12349873-1 plug (1) from harness 12349881-3 jack (2).
3. Inspect plugs and jacks for damage and corrosion.
4. Are plugs and jacks free from corrosion and damage?

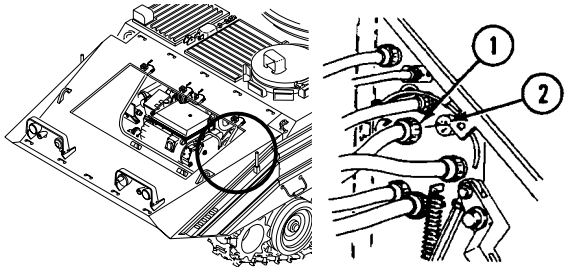

NO →

CYN

1. Replace harness 12349873-1 (WP 0191 00).
2. Verify no faults found.

YES ↓

C2Y

1. Remove harness 12349881-3 plugs (1) and (2) from voltage regulator (3).
2. Inspect all plug and jack pins for corrosion and damage.
3. Are plugs and jacks free from corrosion and damage?

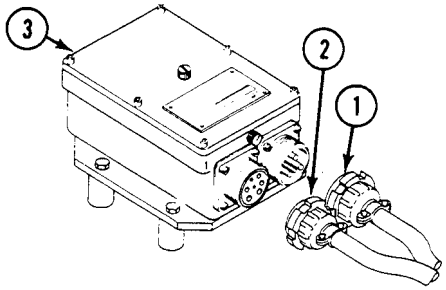

NO →

C2YN

1. Faulty harness 12349881-3 plug or jack.
2. Notify supervisor.

YES ↓

GENERATOR MALFUNCTIONS AS INDICATED BY BATTERY/GENERATOR INDICATOR—Continued **0016 00**

C3Y

1. Measure resistance on regulator (1), between jacks (2) and (3); measure between socket C (4) and pin C (5); measure between socket D (6) and pin A (7).
2. Does VTM read 0 ohms?

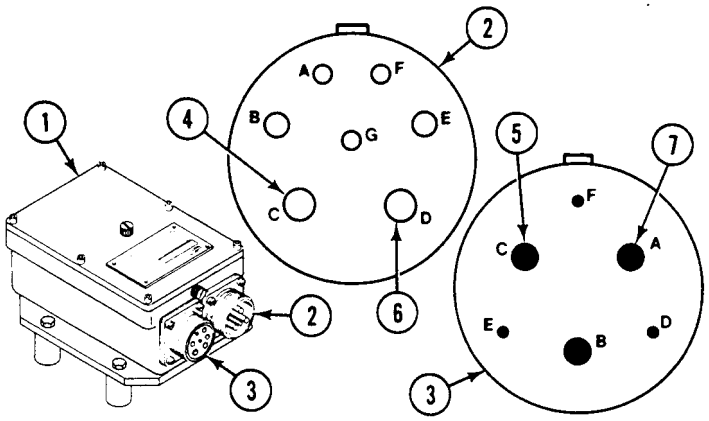

NO →

C3YN

1. Replace regulator. See (WP 0177 00).
2. Verify no faults found.

YES ↓

C4Y

1. Measure resistance between harness 12349881-3 bulkhead jack (1), socket C (2), and regulator plug (3) pin C (4).
2. Measure resistance between harness 12349881-3 bulkhead jack (1) socket D (5), and regulator plug (3) pin D (6).
3. Is reading 0 ohms for both measurements?

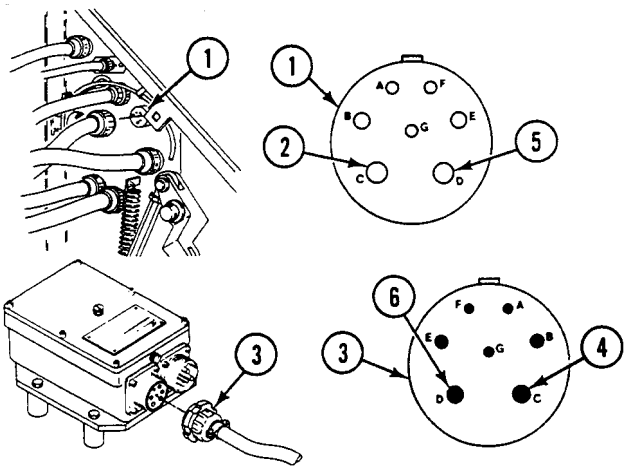

NO →

C4YN

1. Faulty harness 12349881-3 circuit 2/2A.
2. Notify supervisor.

YES ↓

GENERATOR MALFUNCTIONS AS INDICATED BY BATTERY/GENERATOR INDICATOR—Continued **0016 00**

C5Y

1. Remove master switch panel WP 0246 00.
2. Measure resistance between harness 12349881-3 circuit 2/2A (1) between master switch terminal (2) and regulator plug (3) sockets A (4) and C (5).
3. Does VTM read 0 ohms?

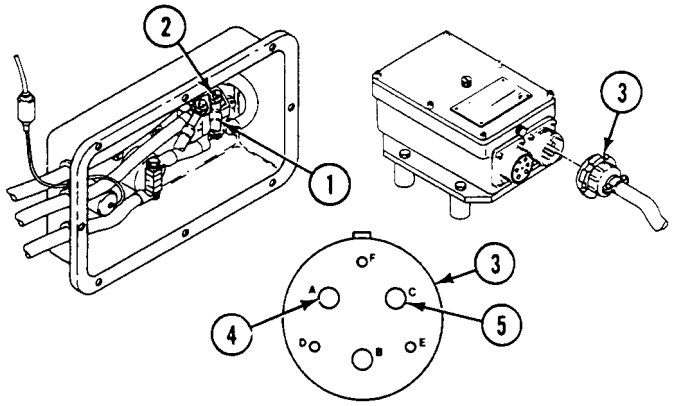

NO

C5YN

1. Faulty harness 12349881-3 circuit 2/2A.
2. Notify supervisor.

YES

C6Y

1. Replace circuit 6 lead (WP 0189 00).
2. Verify no faults found.

GENERATOR MALFUNCTIONS AS INDICATED BY BATTERY/GENERATOR INDICATOR—Continued **0016 00**

DY

1. Has regulator been adjusted?

NO →

DYN

1. Adjust voltage regulator. See (WP 0177 00).
2. Verify no faults found.

YES ↓

D2Y

1. Remove harness 12349873-1 plug (1) from generator field switch (2).
2. Start engine. See TM 9-2350-366-10-1.
3. Measure resistance across switch (2), pins (3) and (4) with engine idling. Use VTM.
4. Does VTM read 0 ohms?

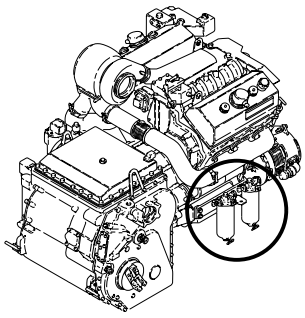

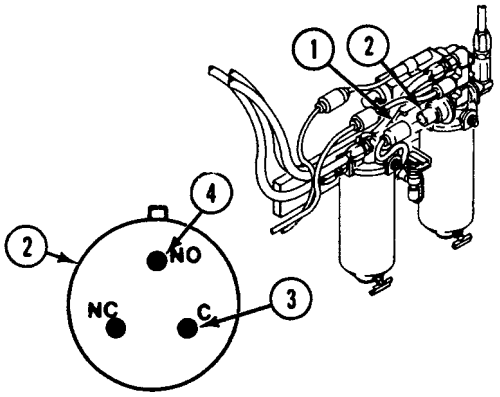

NO →

D2YN

1. Stop engine. See TM 9-2350-366-10-1.
2. Replace generator field switch (WP 0255 00).
3. Verify no faults found.

YES ↓

GENERATOR MALFUNCTIONS AS INDICATED BY BATTERY/GENERATOR INDICATOR—Continued **0016 00**

D3Y

1. Stop engine. See TM 9-2350-366-10-1.
2. Install jumper wire on harness 12349873-1 generator field switch plug (1) between sockets (2), (3).
3. Remove harness 12349873-1 plug (4) from harness 12349881-3 jack (5).
4. Measure resistance between harness 12349873-1 plug (4) pins B (6) and F (7).
5. Does VTM read 0 ohms?

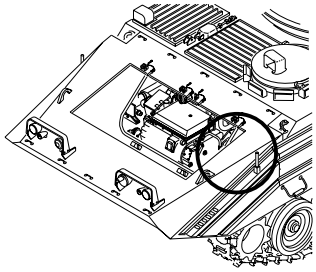

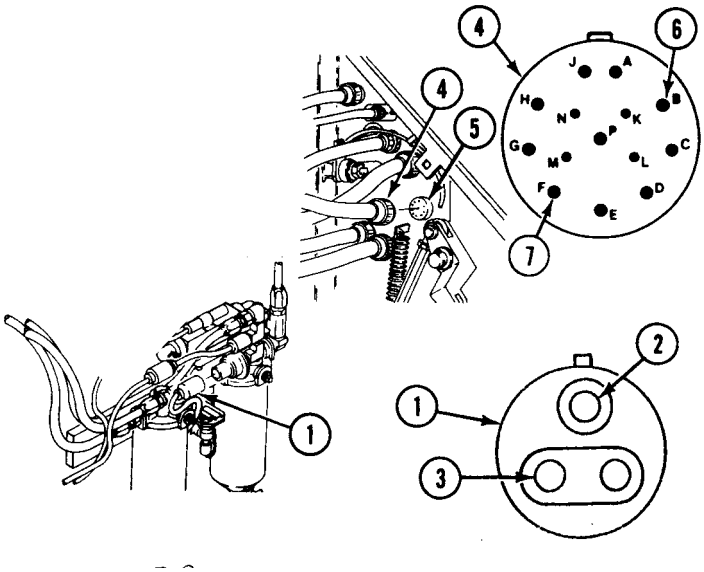

NO

D3YN

1. Replace harness 12349873-1 (WP 0191 00).
2. Verify no faults found.

YES

GENERATOR MALFUNCTIONS AS INDICATED BY BATTERY/GENERATOR INDICATOR—Continued **0016 00**

D4Y

1. Remove jumper wire and install harness 12349873-3 plug on field switch.
2. Perform STE/ICE test 67 (MASTER SWITCH ON, engine OFF) (WP 0076 00). Record reading.
3. Set up STE/ICE test 89. See TM 9-4910-571-12&P.
4. Measure voltage between harness 12349881-1 jack (1) socket F (2) and ground with MASTER SWITCH ON.
5. Is VTM reading within one volt of VTM reading for STE/ICE test 67?

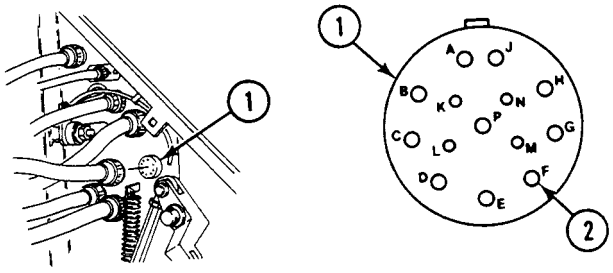

NO →

D4YN

1. Faulty harness 12349881-1 circuit 1C.
2. Notify supervisor.

YES ↓

GENERATOR MALFUNCTIONS AS INDICATED BY BATTERY/GENERATOR INDICATOR—Continued **0016 00**

D5Y

1. Turn MASTER SWITCH to OFF.
2. Install harness 12349873-1 plug on harness 12349881-3 jack.
3. Remove harness 12349881-3 circuit 1/1A/2/2A plug (1) from regulator jack (2).
4. Remove harness 12349873-1 plug (3) from generator jack (4).
5. Install jumper wire between generator plug (3) sockets D (5) and E (6).
6. Measure resistance between harness 12349881-3 regulator plug (1) pins B (7) and E (8).
7. Does VTM read more than 0 ohms?

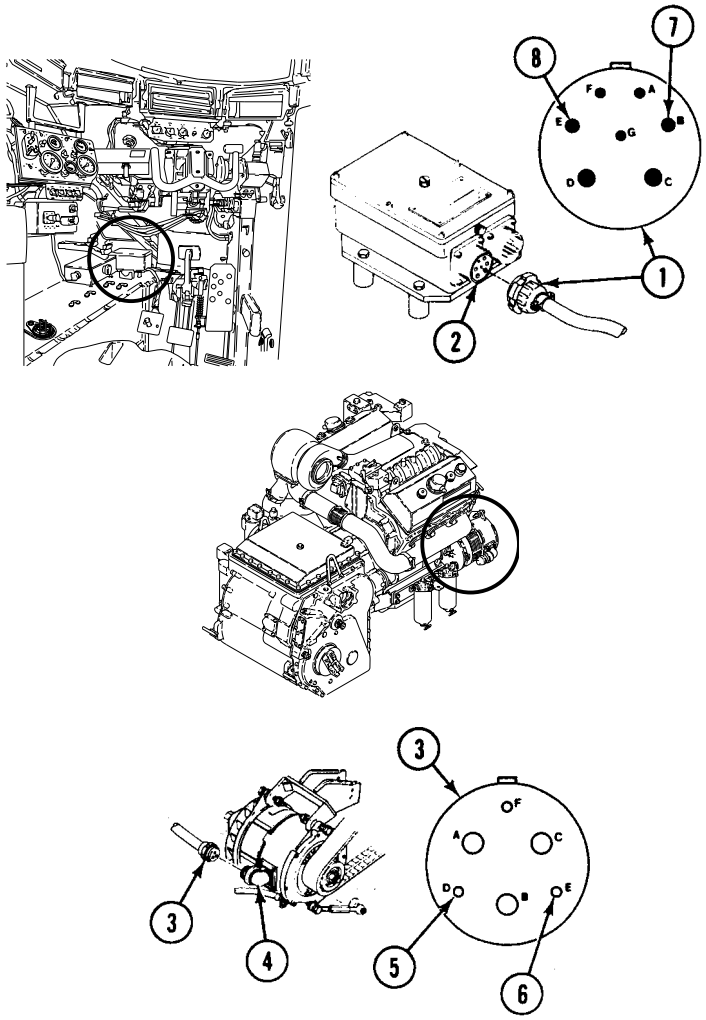

NO →

D5YN

1. Remove jumper wire and install harness 12349873-1 plug on generator jack.
2. Replace regulator (WP 0177 00).
3. Verify no faults found.

YES ↓

GENERATOR MALFUNCTIONS AS INDICATED BY BATTERY/GENERATOR INDICATOR—Continued **0016 00**

D6Y

1. Remove harness 12349873-1 plug (1) from harness 12349881-3 jack (2) at bulkhead.
2. Measure resistance between harness 12349873-1 plug (1) pins B (3) and E (4).
3. Does VTM read 0 ohms?

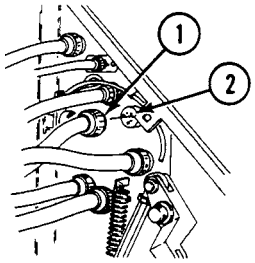

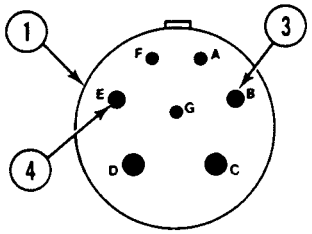

NO →

D6YN

1. Remove jumper wire and install harness 1234987-1 plug on generator jack.
2. Faulty harness 12349873-1 circuit 1/1A.
3. Notify supervisor.

YES ↓

D7Y

1. Remove jumper wire and install harness 12349873-1 plug on generator jack.
2. Faulty harness 12349881 circuit 1/1A.
3. Notify supervisor.

ENGINE OIL LOW PRESSURE INDICATOR COMES ON 0017 00

INITIAL SETUP:

Maintenance Level
Unit

Tools and Special Tools
General Mechanic's Tool Kit: Automotive (WP 0397 00, Item 64)
Pressure Gauge Kit (WP 0397 00, Item 35)

Personnel Required
Unit Mechanic 63T10

References
TM 9-2350-366-10-1

Equipment Condition
Engine stopped (TM 9-2350-366-10-1)
Vehicle blocked (TM 9-2350-366-10-1)
Engine warm (TM 9-2350-366-10-1)
Transmission in SL (TM 9-2350-366-10-1)
Engine oil level checked (TM 9-2350-366-10-1)
Engine idle speed checked (WP 0072 00)
Power plant access panels removed (WP 0308 00)
Front VISMOD access panels removed (WP 0307 00)

T

1. Remove engine low oil pressure switch (WP 0204 00).
2. Install adapter and pressure tester.
3. Start engine and let idle. See TM 9-2350-366-10-1.
4. Does pressure tester read less than 13 psi?

NO →

TN

1. Go to engine oil low pressure indicator malfunctions (WP 0040 00).

YES ↓

Y

1. Low engine oil pressure. Beyond unit maintenance repair.
2. Notify supervisor.

ENGINE OPERATES AT LESS THAN NORMAL TEMPERATURE 0018 00

INITIAL SETUP:

Maintenance Level
Unit

Personnel Required
Unit Mechanic 63T10

References
TM 9-2350-366-10-1

Equipment Condition
Engine stopped (TM 9-2350-366-10-1)
Vehicle blocked (TM 9-2350-366-10-1)
Coolant TEMP indicator operation checked (TM 9-2350-366-10-1)
Coolant TEMP indicator operation checked (TM 9-2350-366-10-1)
Turret rotated to 3200 mils (TM 9-2350-366-10-2)
Engine access cover plate removed (WP 0308 00)
Driver's power plant access panel removed (WP 0312 00)

T

WARNING

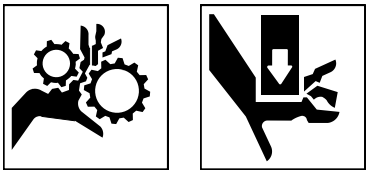

Moving parts of power unit can seriously injure you.

Clear personnel away from power unit before startup. Stay clear of moving parts when power unit is running.

1. Start engine. See TM 9-2350-366-10-1.
2. Observe speed of ventilating fan (1).
3. Engage THERMOSTATIC FAN SPEED switch. See TM 9-2350-366-10-1.
4. Did ventilating fan speed up when switch was engaged?

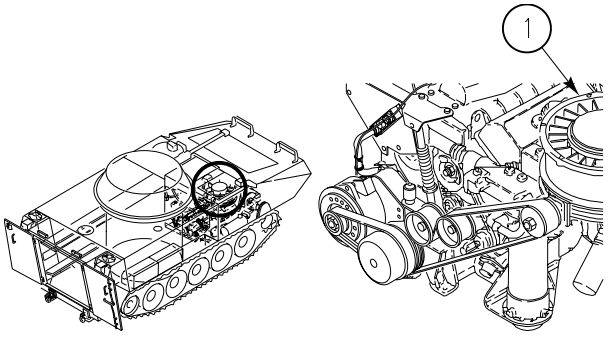

NO

TN

1. Stop engine. See TM 9-2350-366-10-1.
2. Replace THERMOSTATIC FAN SPEED switch (WP 0159 00).
3. Verify no faults found.

YES

ENGINE OPERATES AT LESS THAN NORMAL TEMPERATURE—Continued 0018 00

Y

1. Stop engine. See TM 9-2350-366-10-1.
2. Disengage THERMOSTATIC FAN SPEED switch. See TM 9-2350-366-10-1.
3. Manually rotate fan drive belt (1).
4. Do fan drive belt and all related pulleys rotate freely?

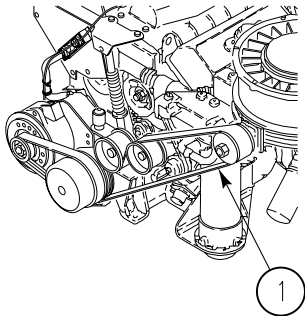

NO

YN

1. Replace variable speed fan drive unit (WP 0178 00).
2. Verify no faults found.

YES

2Y

1. Replace engine thermostat (WP 0165 00).
2. Verify no faults found.

ENGINE CHARGING SYSTEM SCHEMATIC 0019 00

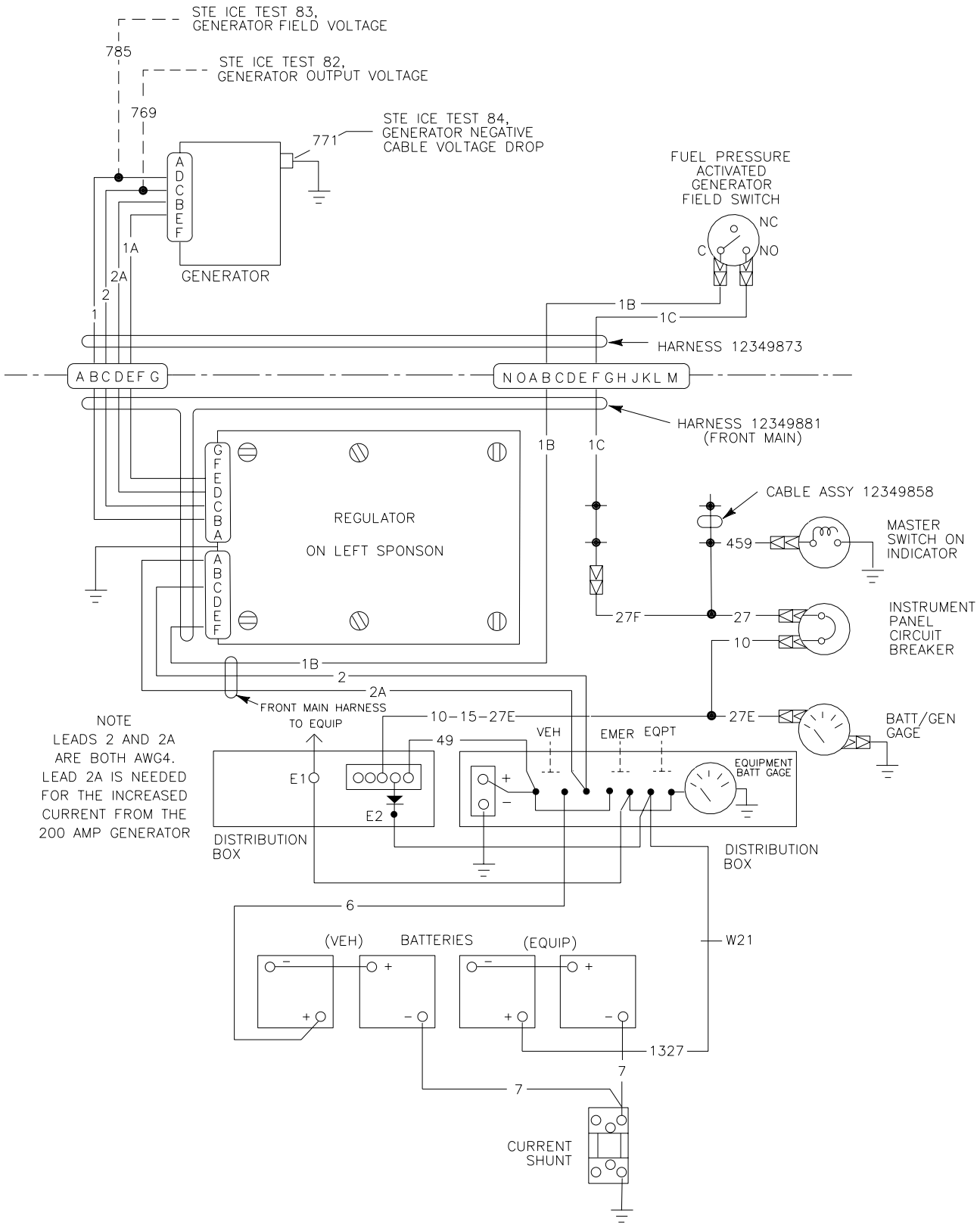

ENGINE FUEL SYSTEM SCHEMATIC 0020 00

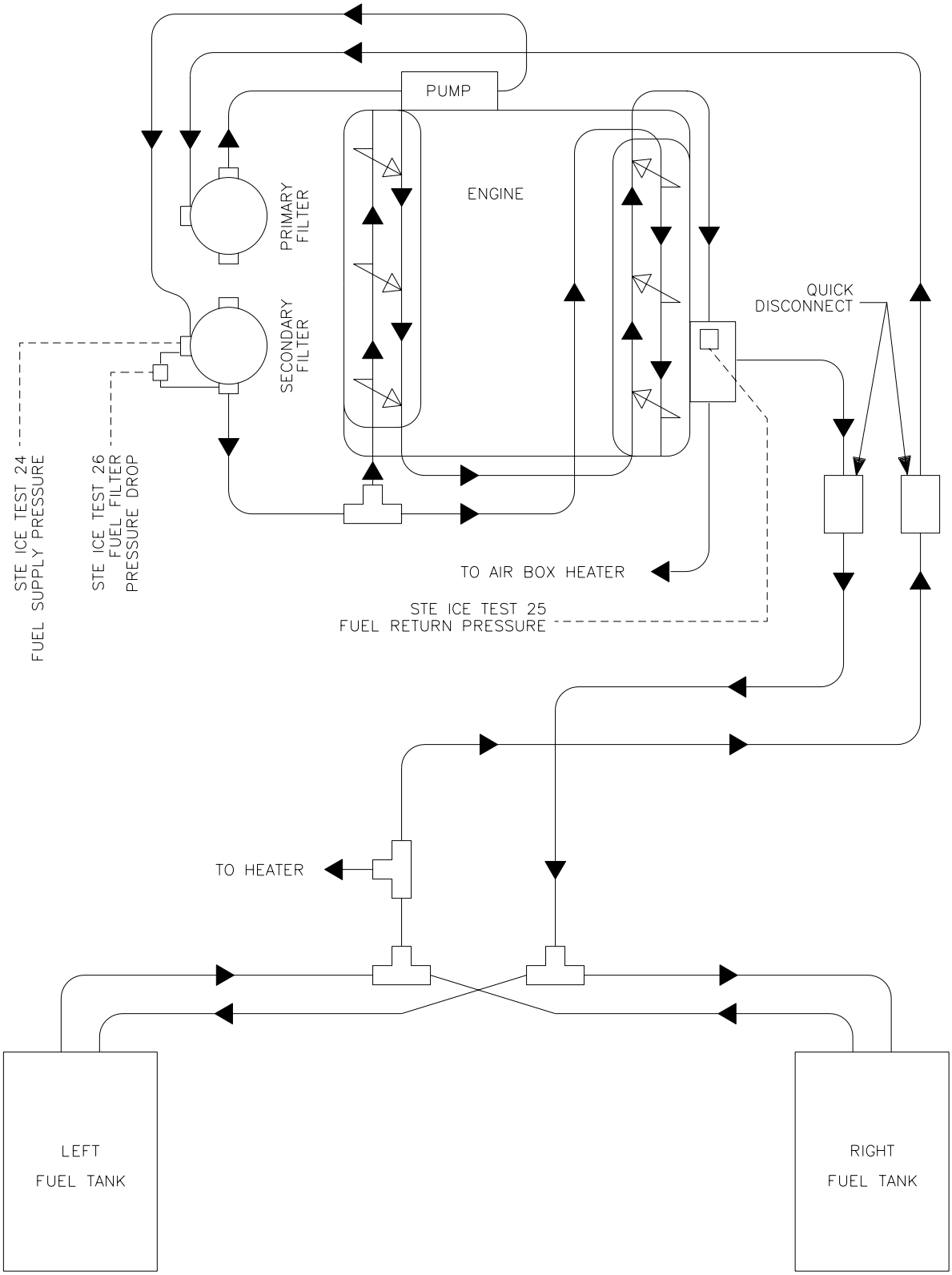

ENGINE STARTER CIRCUIT SCHEMATIC 0021 00

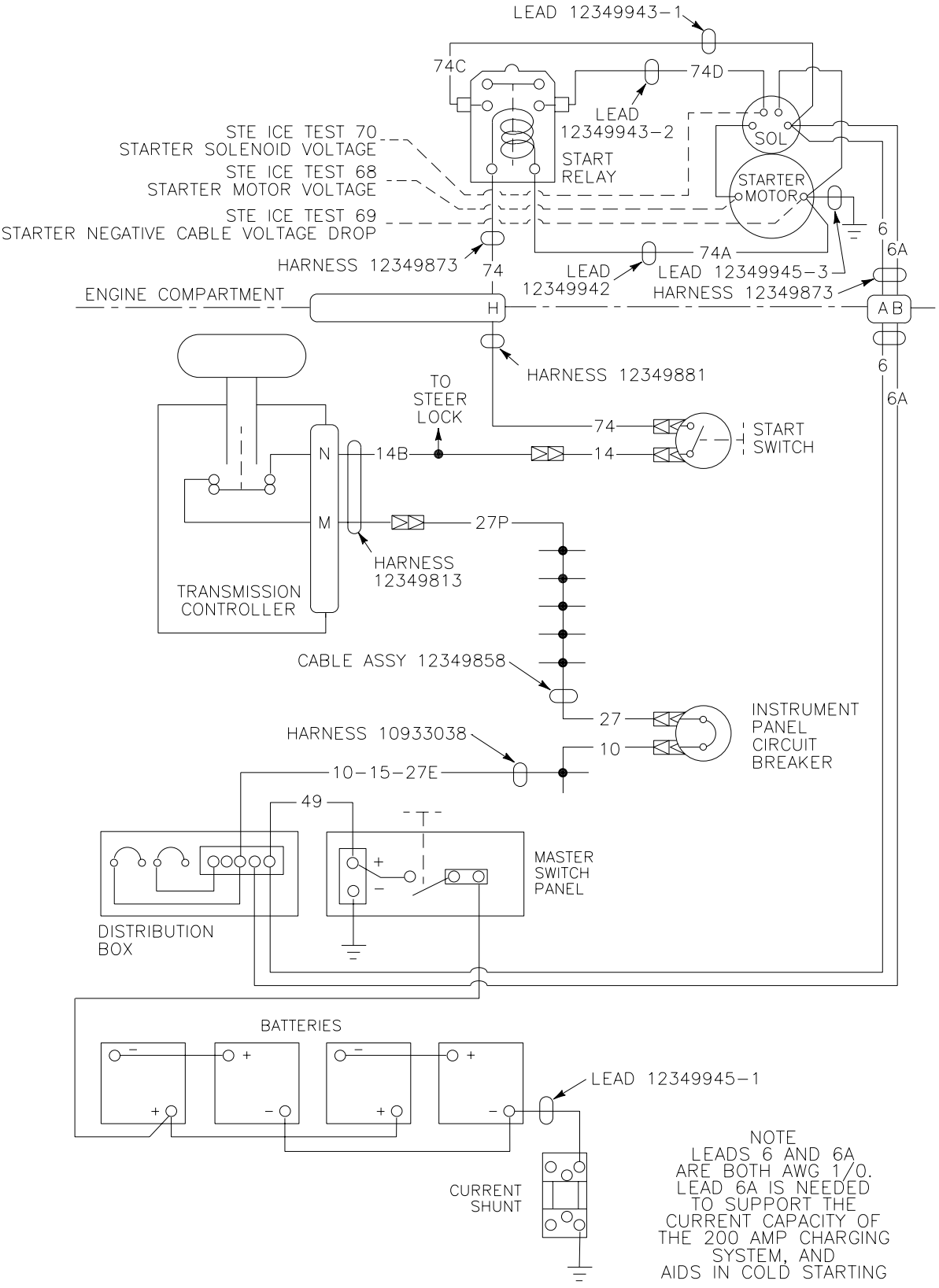

NO POWER TO TURRET 0022 00

INITIAL SETUP:

Maintenance Level
Unit

Tools and Special Tools
Unit mechanic's tool kit: automotive (WP 0397 00, Item 64)
Multimeter (WP 0397 00, Item 30)

Personnel Required
Unit Mech

References
TM 9-2350-366-10-1
TM 9-2350-366-10-2

Equipment Condition
Engine stopped (TM 9-2350-366-10-1)
Vehicle blocked (TM 9-2350-366-10-1)
MASTER POWER on (TM 9-2350-366-10-1)
Turret shutdown (TM 9-2350-366-10-2)

T

1. Disconnect 1W3 P1 from turret slip ring 2A7 J2.
2. Measure voltage between 1W3 P1 pin B and pin E. Use multimeter.
3. Is reading 16 volts or less?

NO →

TN

1. Go to: Turret troubleshooting. See TM 9-2350-366-20-2.

YES ↓

Y

1. Measure resistance between 1W3 P1 pin E and ground. Use multimeter.
2. Is reading less than 10 ohms?

NO →

YN

1. Check 1W3 lead E2 is properly grounded.
2. Measure resistance between 1W3 P1 pin E and ground. Use multimeter. If reading is still greater than 10 ohms, replace 1W3 harness (WP 0181 00).
3. Verify no faults found.

YES ↓

2Y

1. Remove eight locknuts, washers, and screws securing master switch panel to distribution box. Discard locknuts.
2. Measure voltage at bus. Use multimeter.
3. Is reading greater than 16 volts?

NO →

2YN

1. Go to: Battery/Generator Indicator Malfunctions (WP 0036 00).
2. Verify no faults found.

YES ↓

3Y

1. Replace 1W3 harness (WP 0181 00).
2. Verify no faults found.

NO EXTERIOR LIGHTS OPERATE 0023 00

INITIAL SETUP:

Maintenance Level

Unit

Tools and Special Tools

General Mechanic's Tool Kit: Automotive (WP 0397 00, Item 64)
Multimeter (WP 0397 00, Item 30)

Personnel Required

Unit Mechanic 63T10

References

TM 9-2350-366-10-1

Equipment Condition

Engine stopped (TM 9-2350-366-10-1)

Vehicle blocked (TM 9-2350-366-10-1)

T

1. Remove instrument panel for access (WP 0211 00).
2. Remove harness 12349881-3 plug (1) from lighting control switch (2).
3. Remove harness 12349881-3 circuit 15 plug (3) from harness 10933038 circuit 15 jack (4).
4. Measure resistance between harness 12349881-3 circuit 15 plug (3) and lighting control switch plug (1) pin F (5).
5. Does multimeter read 0 ohm?

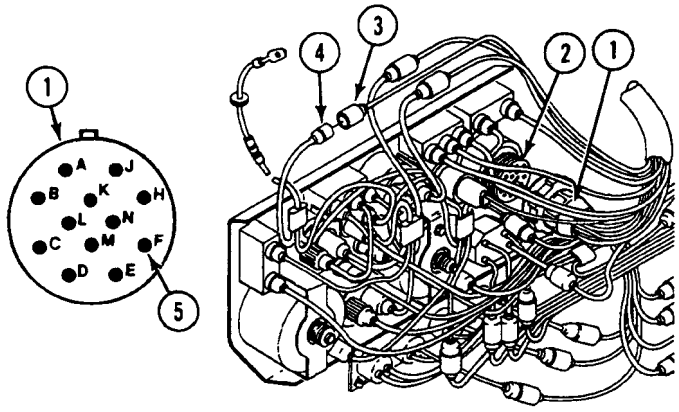

NO

TN

1. Repair circuit 15 (WP 0189 00).
2. Verify no faults found.

YES

NO EXTERIOR LIGHTS OPERATE—Continued **0023 00**

Y

1. Remove harness 10933038 circuit 10 plug (1) from instrument panel circuit breaker (2).
2. Measure resistance between harness 10933038 circuit 15 plug (3) and circuit 10 plug (1).
3. Does multimeter read 0 ohm?

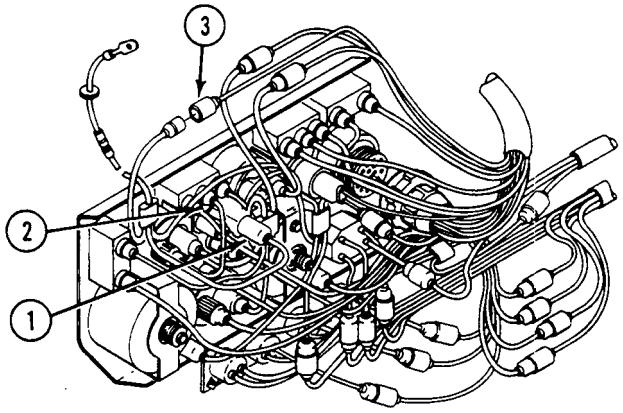

NO

YN

1. Install harness 12349881 lighting control switch plug on switch.
2. Replace harness 10933038 (WP 0216 00).
3. Verify no faults found.

YES

2Y

1. Install harness 10933038-3 circuit 10 and 15 plugs.
2. Replace lighting control switch.
3. Verify no faults found.

BLACKOUT DRIVE LIGHT DOES NOT WORK 0024 00

INITIAL SETUP:

Maintenance Level

Unit

Tools and Special Tools

General Mechanic's Tool Kit: Automotive (WP 0397 00, Item 64)
Multimeter (WP 0397 00, Item 30)

Personnel Required

Unit Mechanic 63T10
Helper (H)

References

TM 9-2350-366-10-1

Equipment Condition

Engine stopped (TM 9-2350-366-10-1)

Vehicle blocked (TM 9-2350-366-10-1)

BO selector on BO (TM 9-2350-366-10-1)

T

1. Operate exterior lights in all positions. See TM 9-2350-366-10-1.
2. Do any exterior lights operate in any lighting control switch positions?

NO →

TN

1. See task: no exterior lights operate (WP 0023 00).

YES ↓

Y

1. Remove harness 12349881-3 plug (1) from BO DRIVE light jack (2).
2. Check continuity between BO DRIVE light jack (2) and ground.
3. Read multimeter. Is there any continuity?

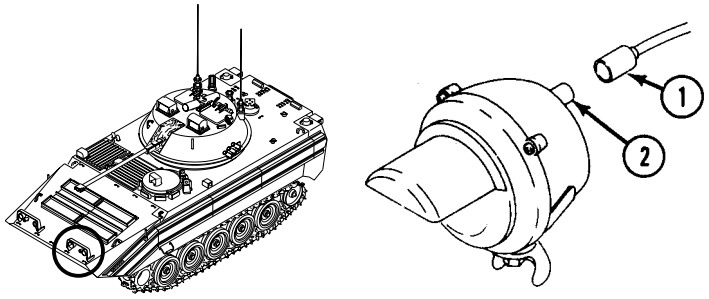

NO →

YN

1. Install harness 12349881-3 plug on BO DRIVE light.
2. Replace BO DRIVE light bulb (WP 0228 00).
3. Verify no faults found.

YES ↓

2Y

1. Does multimeter read more than 0 ohm?

NO →

2YN

1. Replace BO DRIVE light assembly (WP 0229 00).
2. Verify no faults found.

YES ↓

3Y

1. Install harness 12349881-3 plug on BO DRIVE light.
2. Remove instrument panel for access (WP 0211 00).
3. Remove harness 12349881-3 circuit 19 (1) and 520 (2) from BO selector jacks (3) and (4).
4. Measure resistance between BO selector jacks (3) and (4).
5. Does multimeter read 0 ohm?

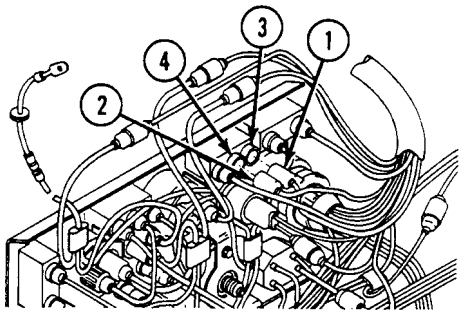

NO

3YN

1. Install harness 12349881-3 plug on BO DRIVE light.
2. Replace BO selector switch (WP 0247 00).
3. Verify no faults found.

YES

4Y

1. Remove harness 12349881-3 plug (1) from light control switch jack (2).
2. Turn switch to BO DRIVE.
3. Measure resistance between light control switch jack (2) pins D (3) and F (4).
4. Does multimeter read 0 ohm?

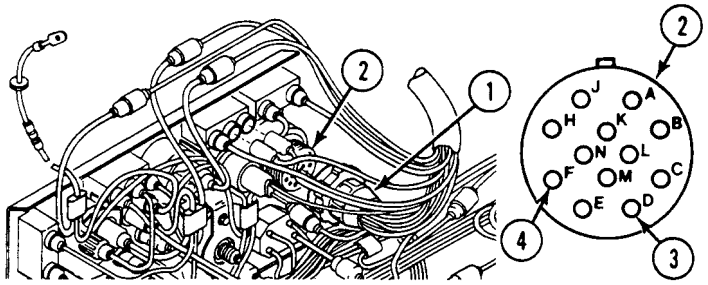

NO

4YN

1. Install harness 12349881-3 plugs on BO selector switch jacks.
2. Replace lighting control switch (WP 0247 00).
3. Verify no faults found.

YES

5Y

1. Measure resistance between harness 12349881-3 circuit 520 plug (1) and lighting control switch plug (2) pin D (3).
2. Does multimeter read 0 ohm?

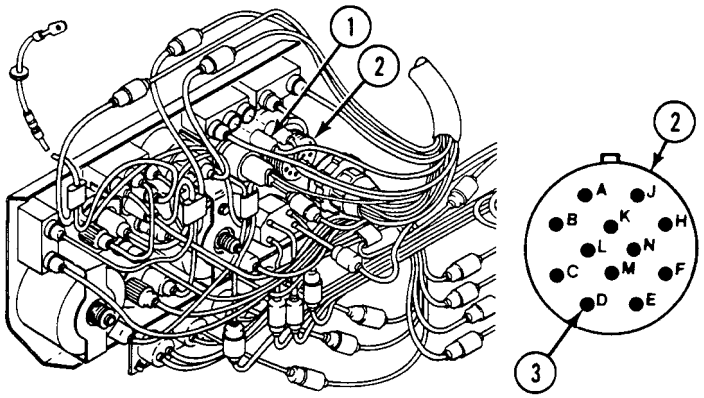

NO →

5YN

1. Install harness 12349881-3 circuit 19 plug on BO selector switch jack.
2. Install harness 12349881-3 plug on light control switch jack.
3. Repair circuit 520 (WP 0189 00).
4. Verify no faults sound.

YES ↓

6Y

1. Install harness 12349881-3 circuit 520 plug on BO selector switch jack.
2. Install harness 12349881-3 plug on light control switch jack.
3. Repair circuit 19 (WP 0189 00).
4. Verify no faults found.

SERVICE HEADLIGHTS DO NOT WORK 0025 00

INITIAL SETUP:

Maintenance Level

Unit

Tools and Special Tools

General Mechanic's Tool Kit: Automotive (WP 0397 00, Item 64)
Multimeter (WP 0397 00, Item 30)

Personnel Required

Unit Mechanic 63T10

References

TM 9-2350-366-10-1

Equipment Condition

Engine stopped (TM 9-2350-366-10-1)

Vehicle blocked (TM 9-2350-366-10-1)

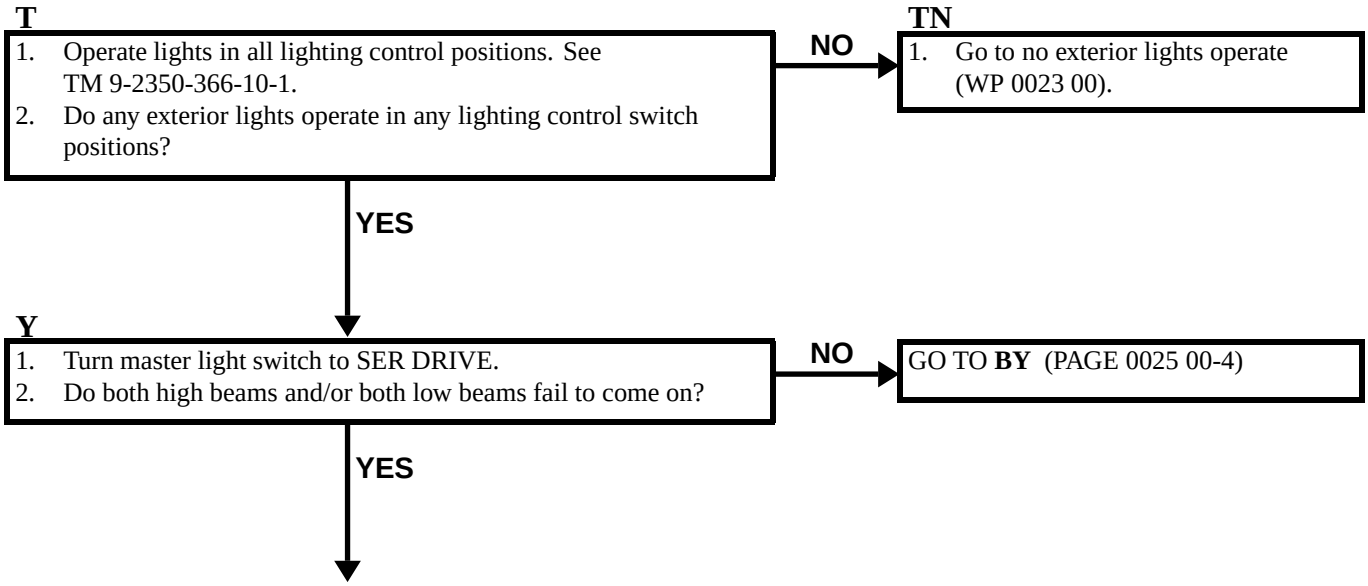

2Y

1. Turn MASTER SWITCH to OFF.
2. Remove two screws (1), washers (2), and dimmer switch (3).
3. Remove harness 12349881-3 plug (4) from dimmer switch jack (5).
4. Turn MASTER SWITCH to ON.
5. Measure voltage between harness 12349881-3 plug (4) pin G (6) and ground.
6. Doe multimeter read less than 17 volts?

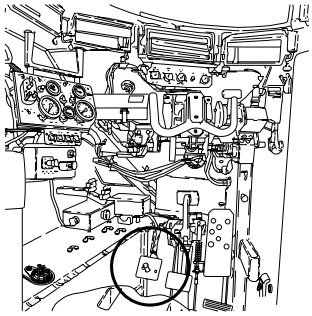

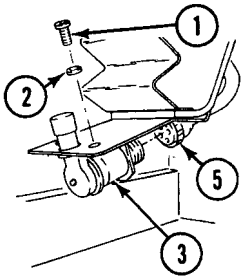

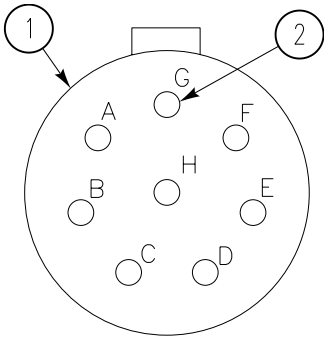

NO → GO TO **CY** (PAGE 0025 00-6)

YES

3Y

1. Turn MASTER SWITCH to OFF.
2. Remove instrument panel for access (WP 0211 00).
3. Remove harness 12349881-3 plug (1) from lighting control switch jack (2).
4. Measure resistance between lighting control switch jack (2) pins F (3) and M (4).
5. Does multimeter read 0 ohm?

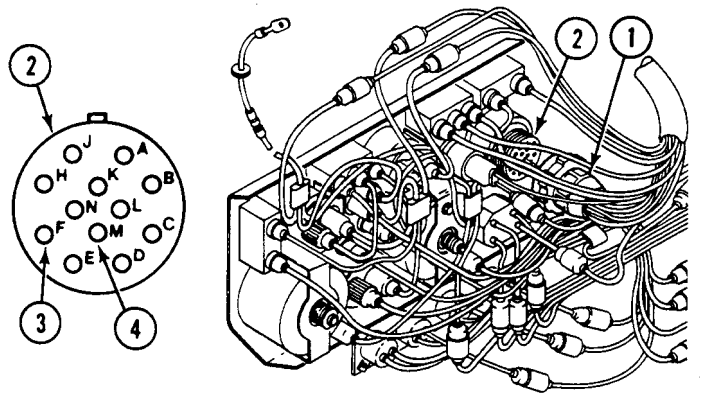

NO →

3YN

1. Install dimmer switch and harness 12349881-3 plug on dimmer switch jack.
2. Replace lighting control switch (WP 0248 00).
3. Verify no faults found.

YES ↓

4Y

1. Faulty harness 12349881-3 circuit 16.
2. Notify supervisor.

SERVICE HEADLIGHTS DO NOT WORK—Continued **0025 00**

BY

1. Remove circuit 17 (high beam) plug (1) or circuit 18 (low beam) plug (2) from failing service headlight jack (3).
2. Measure voltage between harness 12349881-3 circuit 17 plug (1) or circuit 18 plug (2) and ground.
3. Does multimeter read less than 17 volts?

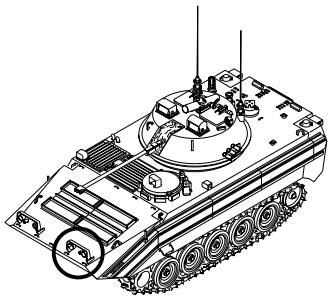

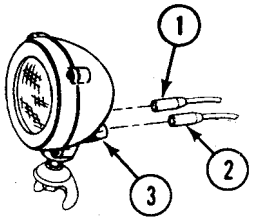

NO

BYN

1. Replace service headlight bulb (WP 0231 00).
2. Verify no faults found.

YES

B2Y

1. Is failing headlight located on right side of vehicle?

NO

B2YN

1. Repair circuit 514 or 515 between left headlight and dimmer switch (WP 0189 00).
2. Verify no faults found.

YES

B3Y

1. Remove harness 8763491 plug (1) from harness 12349881-3 jack (2) at carrier bulkhead.
2. Measure voltage between harness 12349881-3 jack (2) pin C (low beam) (3) or pin B (high beam) (4) and ground.
3. Does multimeter read less than 17 volts?

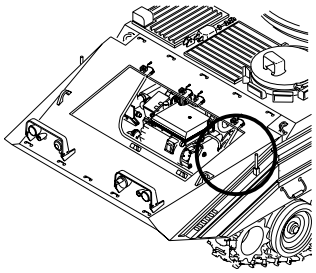

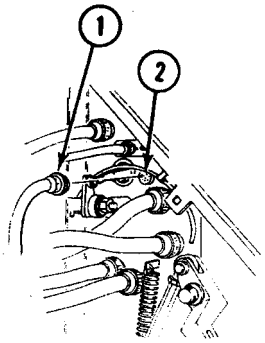

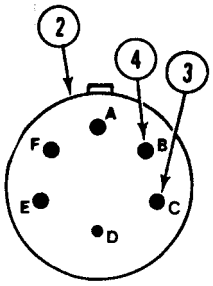

NO →

B3YN

1. Replace faulty harness 8763491 (WP 0185 00).
2. Verify no faults found.

YES ↓

B4Y

1. Turn MASTER SWITCH to OFF.
2. Install harness 8763491 circuit 17 (high beam) or 18 (low beam) on service headlight.
3. Faulty harness 12349881-3 circuit 17 or 18 between bulkhead and dimmer switch.
4. Notify supervisor.

CY

1. Measure resistance between dimmer switch jack (1) pins G (2) and E (3) and between pins G (2) and F (4). Use multimeter. Multimeter should read 0 ohm once and infinity once.
2. Click dimmer switch and check continuity between dimmer switch jack (1) pins G (2) and E (3) and between pins G (2) and F (4). Use multimeter. Multimeter should read infinity once and 0 ohm once.
3. Is dimmer switch working properly?

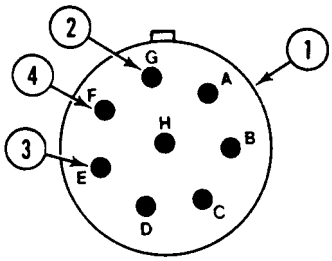

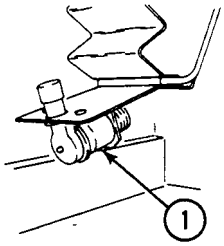

NO

CYN

1. Replace dimmer switch (WP 0248 00).
2. Verify no faults found.

YES

C2Y

1. Faulty harness 12349881-3 circuit 18 (low beam) or circuit 17 (high beam).
2. Notify supervisor.

SERVICE AND/OR BLACKOUT STOP LIGHTS MALFUNCTION 0026 00

INITIAL SETUP:

Maintenance Level

Unit

Tools and Special Tools

General Mechanic's Tool Kit: Automotive (WP 0397 00, Item 64)
Multimeter (WP 0397 00, Item 30)

Personnel Required

Unit Mechanic 63T10
Helper (H)

References

TM 9-2350-366-10-1

Equipment Condition

Engine stopped (TM 9-2350-366-10-1)

Vehicle blocked (TM 9-2350-366-10-1)

T

1. Operate all exterior lights. See TM 9-2350-366-10-1.
2. Do any exterior lights operate in any lighting control switch positions?

NO → **TN**

1. Go to no exterior lights operate (WP 0023 00).

YES ↓

Y

1. Do service stop and BO stop lights both malfunction?

NO → GO TO **BY** (PAGE 0026 00-4)

YES ↓

2Y

1. Check brake light switch adjustment. See (WP 0285 00).
2. Is brake switch in proper adjustment?

NO → **2YN**

1. Adjust brake light switch. See (WP 0285 00).
2. Verify no faults found.

YES ↓

3Y

1. Turn MASTER SWITCH to OFF.
2. Remove harness 12349881-3 circuit 75A plug (1) from switch jack (2).
3. Remove harness 12349881-3 circuit 75B plug (3) from switch jack (4).
4. Measure resistance between switch jacks (2) and (4) with switch depressed and with switch released.
5. Does multimeter read infinity with switch depressed and 0 ohm with switch released?

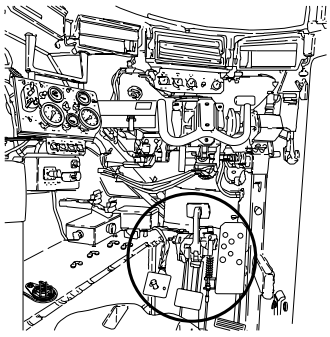

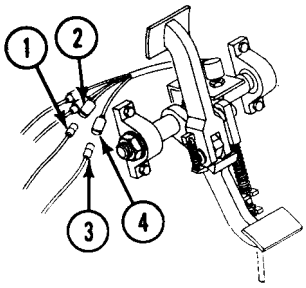

NO

3YN

1. Replace brake light switch (WP 0285 00).
2. Verify no faults found.

YES

4Y

1. Install harness 12349881-3 circuit leads 75A and 75B on stop sensitive switch.
2. Remove instrument panel for access (WP 0211 00).
3. Remove harness 12349881-3 plug (1) from lighting control switch jack (2).
4. Measure resistance between harness 12349881-3 plug (1) pins K (3) and A (4) with brake pedal depressed.
5. Does multimeter read less than 0 ohm?

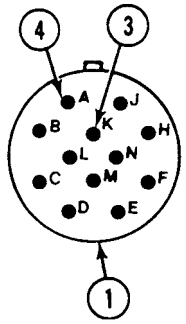

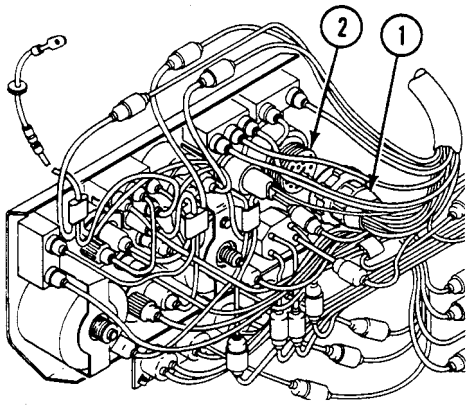

NO →

4YN

1. Faulty harness 12349881-3 circuit 75A and/or 75B. Beyond unit maintenance repair.
2. Notify supervisor.

YES ↓

5Y

1. Replace main light switch (WP 0248 00).
2. Verify no faults found.

BY

1. Remove harness 137681 circuit 22 plug (1) from jack (2) on malfunctioning left tail light, or circuit 23 plug from jack on malfunctioning right tail light.
2. Turn main switch on lighting control to STOP or to BO.
3. Measure voltage between circuit 22 (left) plug (1) or circuit 23 (right) plug and ground with brake pedal depressed.
4. Does multimeter read less than 17 volts?

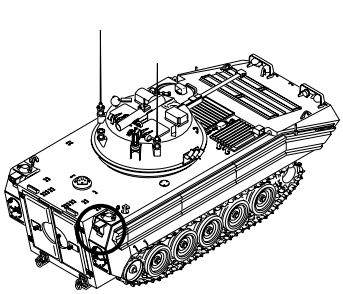

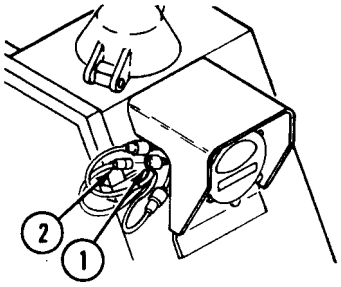

NO →

BYN

1. Install harness 137681 jack on tail light.
2. Replace service stop or BO stop light bulb (WP 0233 00) or (WP 0234 00).
3. Verify no faults found.

YES ↓

B2Y

1. Remove harness 137681 circuit 22 plug (left) (1) or circuit 23 plug (right) (2) from harness 12349881-3 circuit 22 jack (3) or circuit 23 jack (4).
2. Measure voltage between harness 12349881-3 circuit 22 jack (2) or circuit 23 jack (3) and ground.
3. Does multimeter read less than 17 volts?

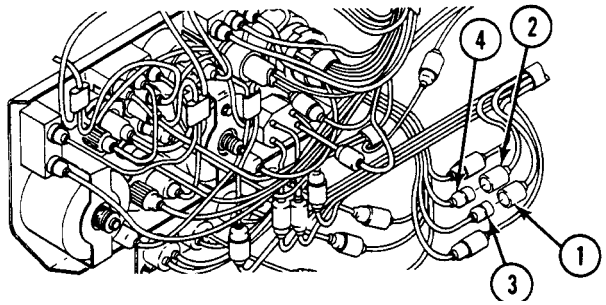

NO →

B2YN

1. Repair circuit 22 or 23 (WP 0189 00).
2. Verify no faults found.

YES ↓

B3Y

1. Remove instrument panel for access (WP 0211 00).
2. Remove harness 12349881-3 plug (1) from lighting control switch (2).
3. Measure resistance between lighting control switch plug (1) pin C (3) to circuit 23 (service stop) jack (4) or pin N (5) to circuit 23 (BO stop) jack (6).
4. Does multimeter read 0 ohm?

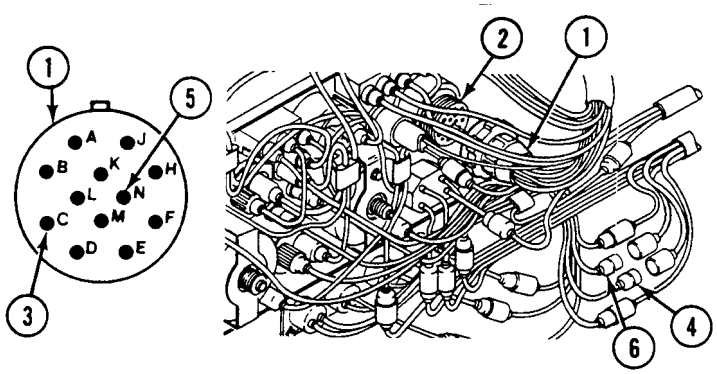

NO →

B3YN

1. Install harness 137681 on tail light.
2. Faulty harness 12349881-3 circuit 22 or 23.
3. Notify supervisor.

YES ↓

B4Y

1. Install harness 137681 plugs on harness 12349881-3 jack and tail light.
2. Replace main light switch (WP 0248 00).
3. Verify no faults found.

BLACKOUT MARKER LIGHTS DO NOT WORK 0027 00

INITIAL SETUP:

Maintenance Level

Unit

Tools and Special Tools

Unit Mechanic's Tool Kit: Automotive (WP 0397 00, Item 64)
Multimeter (WP 0397 00, Item 30)

Personnel Required

Unit Mech 63T10
Helper (H)

References

TM 9-2350-366-10-1

Equipment Condition

Engine stopped (TM 9-2350-366-10-1)

Vehicle blocked (TM 9-2350-366-10-1)

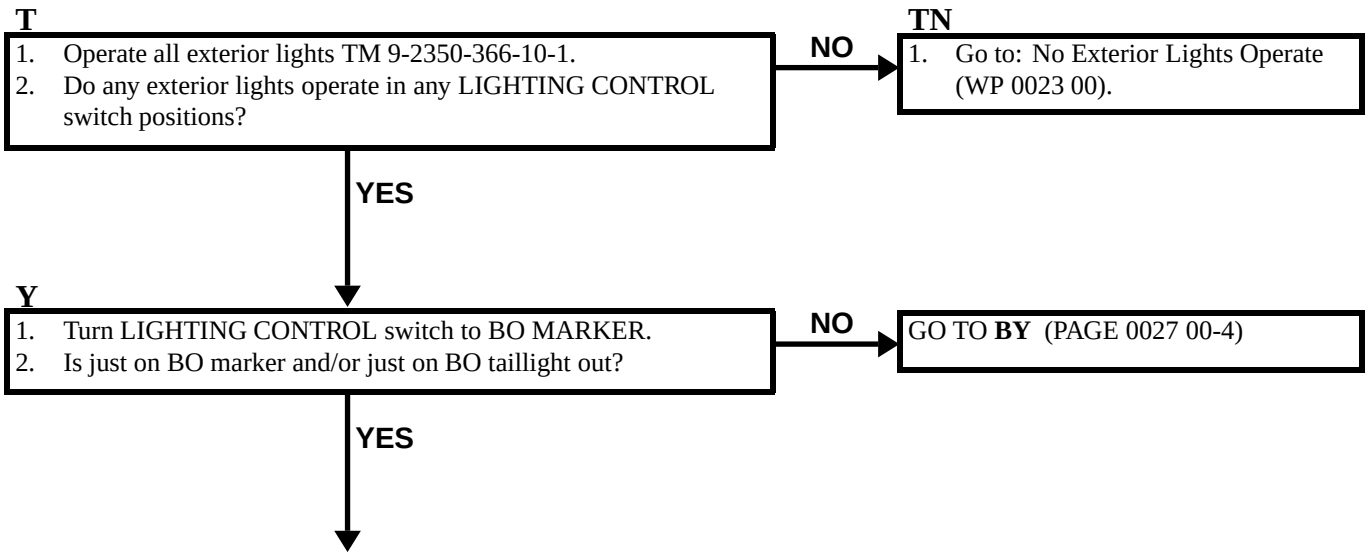

2Y

1. Locate failing light (s).
2. Remove circuit 20 (BO marker) (1) and/or circuit 24 (BO taillight) (2) from failing light.
3. Measure voltage between plug pin and ground.
4. Does multimeter read less than 17 volts?

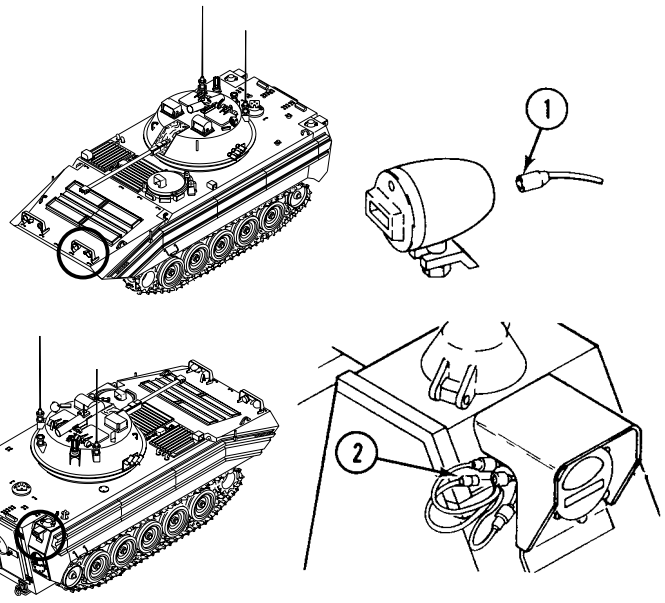

NO

2YN

1. Replace faulty light bulb: BO marker (WP 0227 00), left BO taillight (WP 0233 00), and right BO taillight (WP 0234 00).
2. Verify no faults found.

YES

3Y

1. Is one front BO marker light not working?

NO

3YN

1. Repair harness 137681 circuit 24 (WP 0189 00).
2. Verify no faults found.

YES

4Y

1. Is right BO marker light out?

NO

4YN

1. Repair harness 12349881-3 circuit 20 (WP 0189 00).
2. Verify no faults found.

YES

5Y

1. Remove harness 8763491 plug (1) from harness 12349881-3 jack (2) at vehicle bulkhead.
2. Measure voltage between harness 12349881-3 jack (2), pin D (3), and ground.
3. Does multimeter read less than 17 volts?

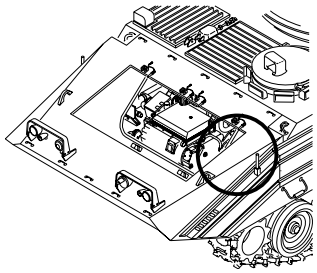

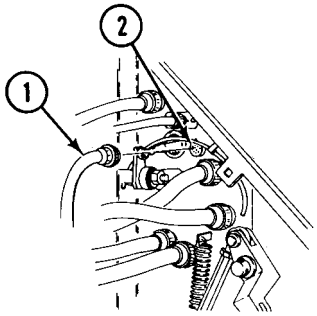

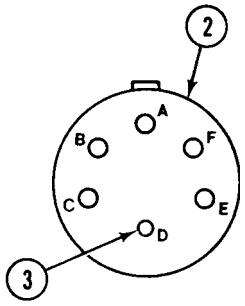

NO →

5YN

1. Replace harness 8763491 (WP 0189 00).
2. Verify no faults found.

YES ↓

6Y

1. Install harness 8763491 circuit 20 jack on right BO marker light.
2. Faulty harness 12349881-3 circuit 20. Beyond unit maintenance repair.
3. Notify supervisor.

BY

1. Are only both BO taillights out or only both BO markers out?

NO → GO TO **CY** (PAGE 0027 00-5)

YES

B2Y

1. Are both BO taillights out?

NO → **B2YN**

1. Faulty harness 12349881-3 circuit 20. Beyond unit maintenance repair.
2. Notify supervisor.

YES

B3Y

1. Remove harness 137681 circuit 24 plug (1) from harness 12349881-3 circuit 24 jack (2).
2. Measure voltage between harness 12349881-3 jack pin (1) and ground.
3. Does multimeter read less than 17 volts?

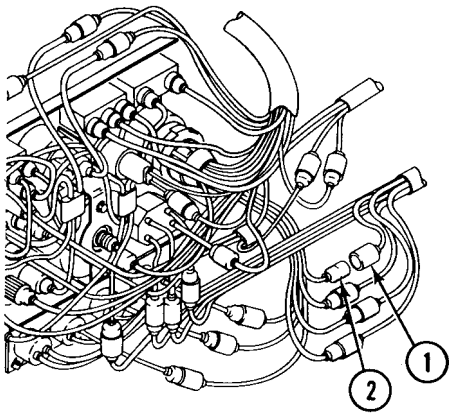

NO → **B3YN**

1. Repair harness 137681 circuit 20 (WP 0189 00).
2. Verify no faults found.

YES

B4Y

1. Faulty harness 12349881-3 circuit 24. Beyond unit maintenance repair.
2. Notify supervisor.

CY

1. Turn MASTER SWITCH OFF.
2. Remove instrument panel for access (WP 0220 00).
3. Remove harness 12349881-3 plug (2) from LIGHTING CONTROL switch jack (1).
4. Measure resistance between LIGHTING CONTROL switch jack (1), pins F (3) and E (4).
5. Does multimeter read 0 ohms?

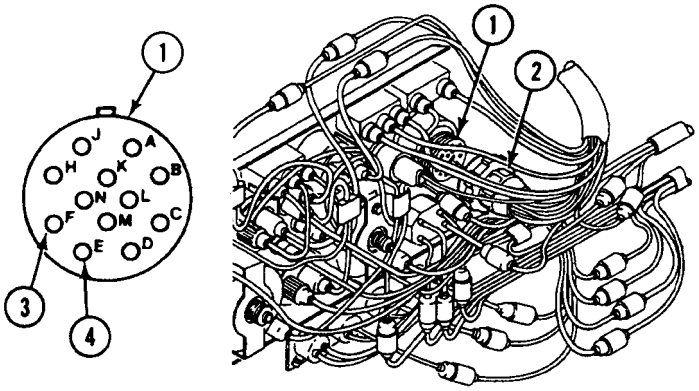

NO →

CYN

1. Replace LIGHTING CONTROL switch (WP 0248 00).
2. Verify no faults found.

YES ↓

C2Y

1. Faulty harness 12340991 circuit 20/24. Beyond unit maintenance repair.
2. Notify supervisor.

SERVICE TAILLIGHT(S) DO NOT WORK 0028 00

INITIAL SETUP:

Maintenance Level

Unit

Tools and Special Tools

General Mechanic's Tool Kit: Automotive (WP 0397 00, Item 64)
Multimeter (WP 0397 00, Item 30)

Personnel Required

Unit Mech 63T10
Helper (H)

References

TM 9-2350-366-10

Equipment Condition

Engine stopped (TM 9-2350-366-10-1)

Vehicle blocked (TM 9-2350-366-10-1)

T

1. Operate SERVICE LIGHT switch in all positions TM 9-2350-366-10-1.
2. Do any exterior lights operate in any LIGHTING CONTROL switch positions?

NO →

TN

1. Go to: No Exterior Lights Operate (WP 0023 00).

YES ↓

Y

1. Turn light switch to SER DRIVE.
2. Remove harness 137681 circuit 21 plug (1) from left taillight jack (2).
3. Measure voltage between harness 137681 circuit 21 plug (1) and ground.
4. Does multimeter read less than 17 volts?

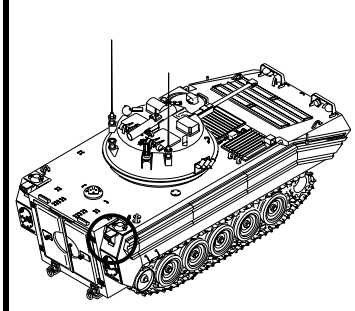

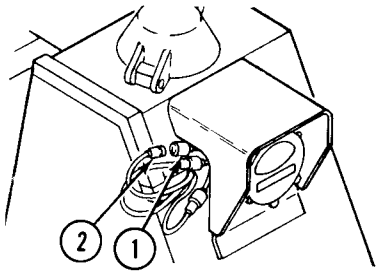

NO →

YN

1. Replace service taillight bulb (WP 0231 00).
2. Verify no faults found.

YES ↓

SERVICE TAILLIGHT(S) DO NOT WORK—Continued **0028 00**

2Y

1. Remove harness 137681 circuit 21 plug (1) from harness 12349881-3 circuit 21 jack (2) on panel.
2. Measure voltage between harness 12349881-3 jack (1) and ground.
3. Does multimeter read less than 17 volts?

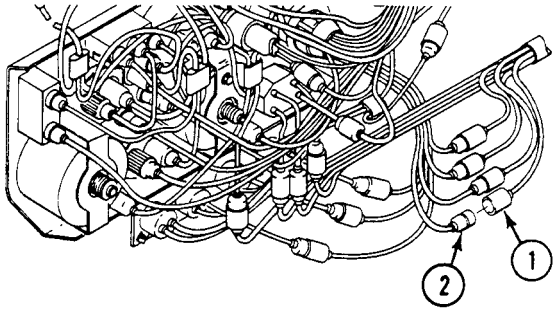

NO →

2YN

1. Repair harness 137681 circuit 21 (WP 0189 00).
2. Verify no faults found.

YES ↓

3Y

1. Turn MASTER SWITCH OFF.
2. Remove instrument panel for access (WP 0220 00).
3. Remove harness 12349881-3 plug (2) from LIGHTING CONTROL switch jack (1)
4. Measure resistance between LIGHTING CONTROL switch jack (1), pin H (3), and circuit 21 jack (2).
5. Does multimeter read 0 ohms?

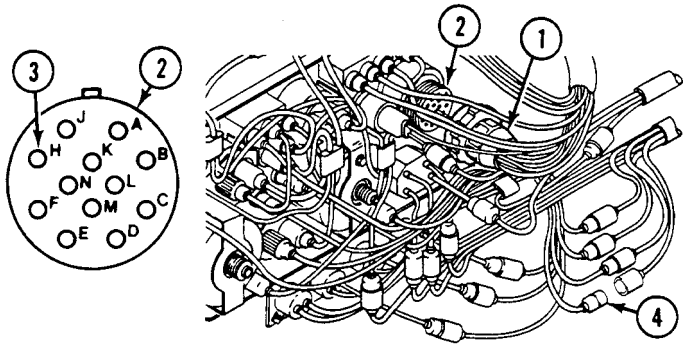

NO →

3YN

1. Repair harness 137681 circuit 2 plug on left taillight jack.
2. Faulty harness 12349881-3 circuit 21. Beyond unit maintenance repair.
3. Verify no faults found.

YES ↓

4Y

1. Install harness 137681 circuit 21 plug on left taillight jack.
2. Replace main light switch (WP 0248 00)
3. Verify no faults found.

HORN DOES NOT WORK 0029 00

INITIAL SETUP:

Maintenance Level
Unit

Tools and Special Tools
Unit Mechanic's Tool Kit: Automotive (WP 0397 00, Item 64)
Multimeter (WP 0397 00, Item 30)
Jumper Wire

Personnel Required
Unit Mechanic 63T10
Helper (H)

References
TM 9-2350-366-10-1

Equipment Condition
Engine stopped (TM 9-2350-366-10-1)
Vehicle blocked (TM 9-2350-366-10-1)
Power plant access panels removed (WP 0308 00)
Front VISMOD access panel removed (WP 0314 00)

T

1. Remove lead 10863474 plug (1) from horn jack (2).
2. Measure resistance between lead 10863474 plug (1) and ground.
3. Does multimeter read 0 ohms?

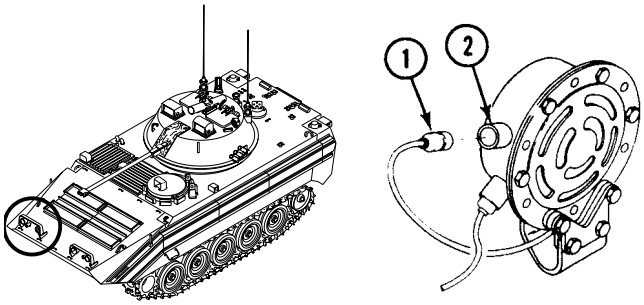

NO →

TN

1. Replace lead 10863474 and/or connector (WP 0189 00).
2. Verify no faults found.

YES ↓

Y

1. Remove harness 8763491 circuit 25 plug (1) from horn jack (2).
2. Move MASTER POWER switch to ON.
3. Measure voltage between harness 8763491 circuit 25 plug (1) and ground with horn button depressed.
4. Does multimeter read less than 17 volts?

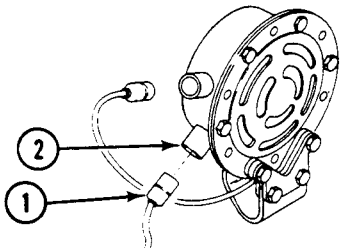

NO →

YN

1. Replace horn (WP 0318 00).
2. Verify no faults found.

YES ↓

2Y

1. Release horn button.
2. (H) Move MASTER POWER switch to OFF.
3. Remove harness 8763491 plug (1) from harness 12349881-3 jack (2) at fire wall.
4. Measure resistance between harness 8763491 plug (1), pin A (3) to lead 25 (4).
5. Does multimeter read 0 ohms?

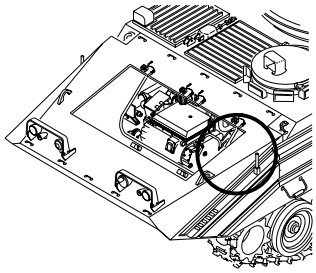

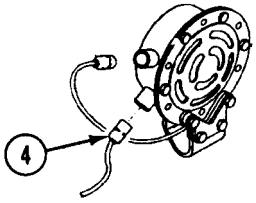

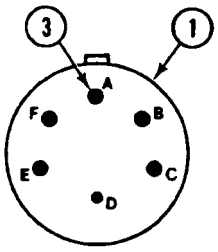

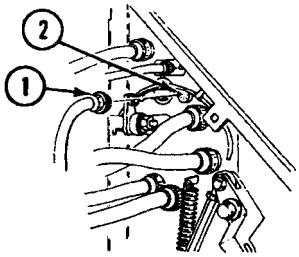

NO

2YN

1. Replace wiring harness 8763491 circuit 25 (WP 0189 00).
2. Verify no faults found.

YES

3Y

1. Remove circuit 25/25A plug (1) from horn switch jack (2).
2. Measure resistance between horn switch jack pins (2) with horn switch depressed.
3. Does multimeter read 0 ohms?

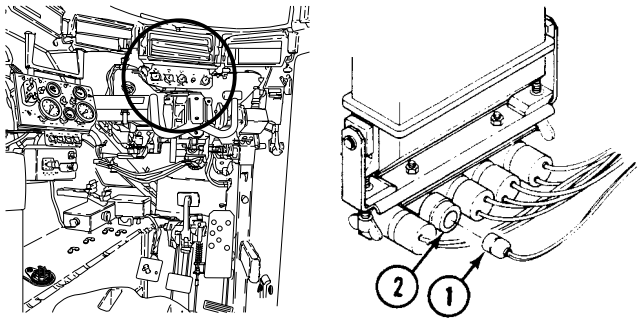

NO →

3YN

1. Install harness 8763491 plug to harness 12349881-3 jack at fire wall.
2. Install lead 10863474 plug to horn jack.
3. Install harness 8763491 circuit 25 plug onto horn jack.
4. Replace horn switch (WP 0250 00).
5. Verify no faults found.

YES ↓

4Y

1. Install jumper wire between horn switch plug (1), circuit 25 pin (2) and ground.
2. Measure resistance between harness 12349881 jack (3), pin A (4) and ground.
3. Does multimeter read 0 ohms?

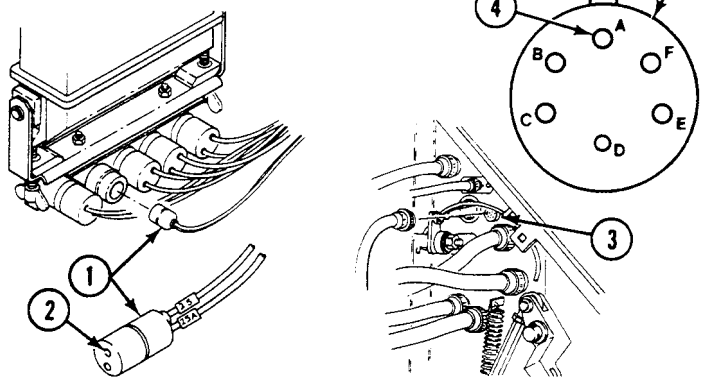

NO →

4YN

1. Remove jumper wire from horn switch plug.
2. Faulty harness 12349881 circuit 25A. Beyond unit maintenance repair.
3. Notify supervisor.

YES ↓

5Y

1. Remove jumper wire from horn switch plug.
2. Remove instrument panel for access (WP 0220 00).
3. Remove harness 12349881 circuit 25A plug (1) from cable assembly 12349858 circuit 25A jack (2).
4. Install jumper wire between 12349858 jack, circuit 25A pin (2) and ground.
5. Measure resistance between horn switch plug (3), circuit 25A pin (4) and ground.
6. Does multimeter read 0 ohms?

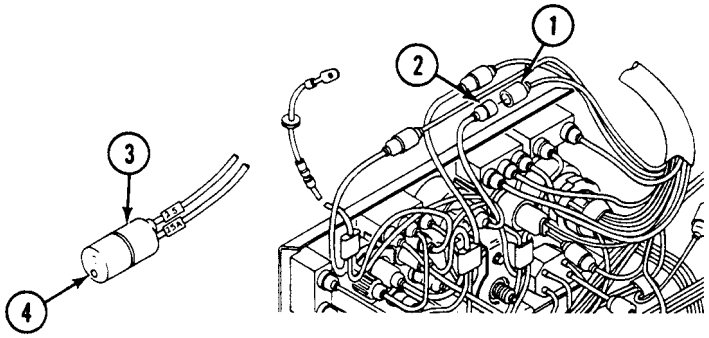

NO

5YN

1. Remove jumper wire from harness 12349858 circuit 25A.
2. Faulty harness 12349881 circuit 25A. Beyond unit maintenance repair.
3. Notify supervisor.

YES

6Y

1. Remove jumper wire from harness 123498558 circuit 25A plug.
2. Install circuits 25 and 25A on horn switch.
3. Install harness 8761491 plug on harness 12349881 jack on fire wall.
4. Repair harness 12349858 circuit 25A (WP 0189 00).
5. Verify no faults found.

INSTRUMENT PANEL AND/OR TRANS CONTROLLER ILLUMINATION LIGHTS MALFUNCTION

0030 00

INITIAL SETUP:

Maintenance Level

Unit

Tools and Special Tools

Unit Mechanic's Tool Kit: Automotive (WP 0397 00, Item 64)
Multimeter (WP 0397 00, Item 30)

Personnel Required

Unit Mechanic 63T10

References

TM 9-2350-366-10-1

Equipment Condition

Engine stopped (TM 9-2350-366-10-1)

Vehicle blocked (TM 9-2350-366-10-1)

T

1. Move MASTER POWER switch to ON.
2. Operate all exterior lights TM 9-2350-366-10-1.
3. Do any exterior lights operate in any LIGHTING CONTROL switch position?

NO →

TN

1. Turn MASTER SWITCH OFF.
2. Go to: No Exterior Lights Operate (WP 0023 00)

YES ↓

Y

1. Remove instrument panel illumination light cover lenses (1)and (4)and gaskets (3)and (2).
2. Remove transmission range controller indicator cover (WP 0266 00).
3. Operate LIGHTING CONTROL switch to DIM and BRT TM 9-2350-366-10.
4. Do all three lights malfunction?

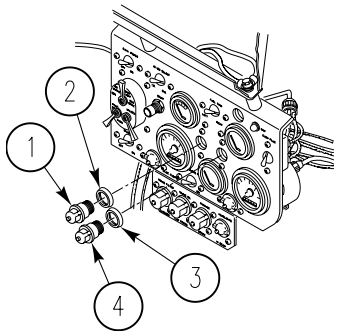

NO →

GO TO **BY** (PAGE 0030 00-3)

YES ↓

INSTRUMENT PANEL AND/OR TRANS CONTROLLER ILLUMINATION LIGHTS MALFUNCTION—Continued **0030 00**

2Y

1. Move MASTER POWER switch to OFF.
2. Install instrument panel illumination light and controller indicator cover lenses and gaskets.
3. Remove instrument panel for access (WP 0220 00).
4. Remove harness LIGHTING CONTROL 12349881-3 switch plug (1) from switch jack (2).
5. Remove harness 12349813 circuit 40 plug (3) from harness 12349881 circuit 40 jack (4).
6. Measure resistance between harness 12349881 LIGHTING CONTROL switch plug (1), pin B (5), and circuit 40 jack pin (4) or (6).
7. Does multimeter read 0 ohms?

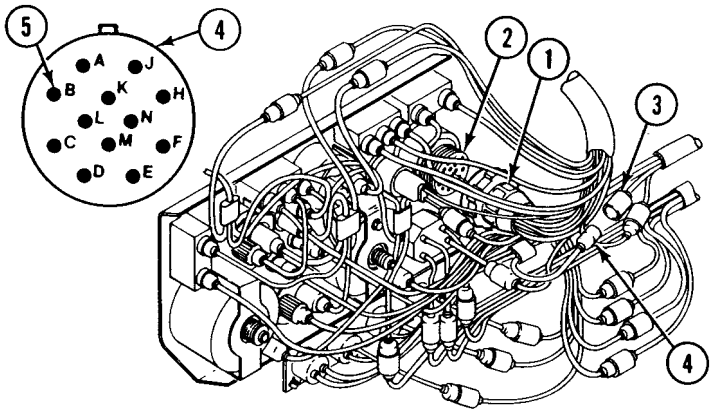

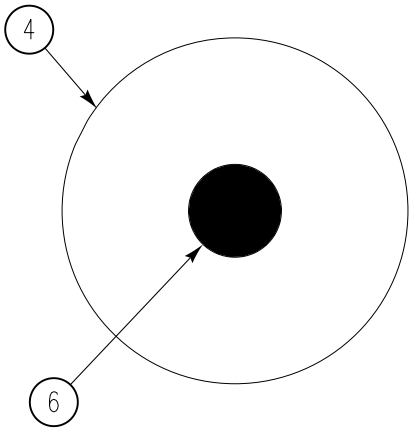

NO

2YN

1. Faulty harness 12349881-3 circuit 40.
2. Notify supervisor.

YES

3Y

1. Replace main light switch (WP 0248 00).
2. Verify no faults found.

INSTRUMENT PANEL AND/OR TRANS CONTROLLER ILLUMINATION LIGHTS MALFUNCTION—Continued **0030 00**

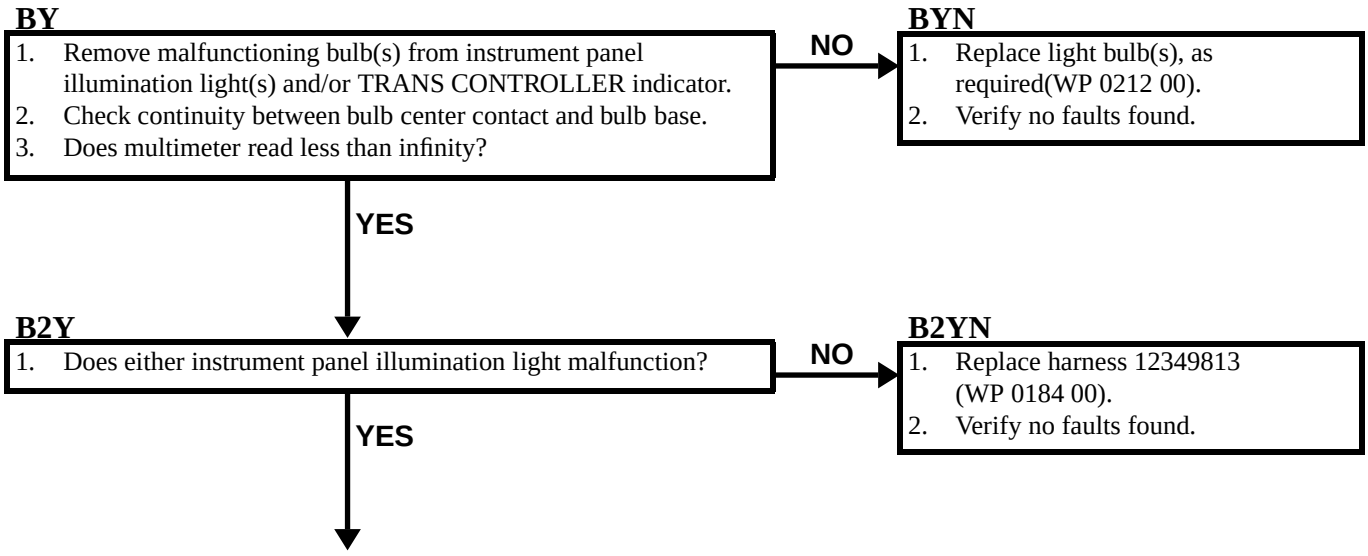

INSTRUMENT PANEL AND/OR TRANS CONTROLLER ILLUMINATION LIGHTS MALFUNCTION—Continued **0030 00**

B3Y

1. Remove instrument panel for access (WP 0220 00).
2. Remove harness 12349881-3 plug (1) from LIGHTING CONTROL switch jack (2).
3. Remove harness 12349881-3 circuit 40 plug (3) or (4) from failing instrument panel light (5) or (6).
4. Measure resistance between harness 12349881-3 LIGHTING CONTROL switch plug (1), pin B (7), and failing circuit 40 light plug (3) or (4).
5. Does multimeter read 0 ohms?

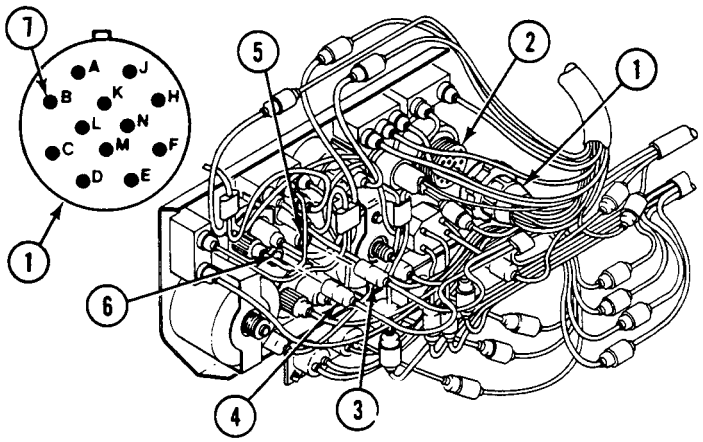

NO

B3YN

1. Install bulbs.
2. Faulty harness 12349881-3, circuit 40. Beyond unit maintenance repair.
3. Notify supervisor.

YES

B4Y

1. Install harness 12349881-3 plug on LIGHTING CONTROL switch jack.
2. Replace instrument panel light assembly (WP 0220 00).
3. Verify no faults found.

DOME LIGHT(S) DO NOT WORK 0031 00

INITIAL SETUP:

Maintenance Level

Unit

Tools and Special Tools

General Mechanic's Tool Kit: Automotive (WP 0397 00, Item 64)
Multimeter (WP 0397 00, Item 30)

Personnel Required

Unit Mech 63T10
Helper (H)

References

TM 9-2350-366-10-1

Equipment Condition

Engine stopped (TM 9-2350-366-10-1)

Vehicle blocked (TM 9-2350-366-10-1)

T

1. Remove harness 12268797 plug (1) from jack (2) on faulty dome light.
2. Turn MASTER SWITCH ON.
3. Measure voltage between harness 12268797 plug (1) and ground.
4. Does multimeter read 17 volts or more?

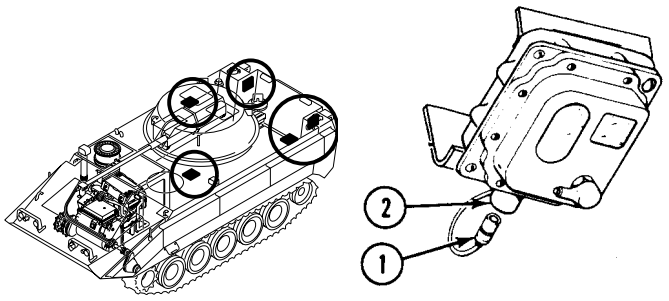

NO → GO TO **BY** (PAGE 0031 00-3)

YES ↓

DOME LIGHT(S) DO NOT WORK—Continued **0031 00**

Y

1. Turn MASTER SWITCH OFF.
2. Install harness 137681 plug on dome light.
3. Remove dome light bulbs from dome light assembly (WP 0222 00).
4. Check continuity between light bulb center contact (1) and bulb base (2).
5. Is there continuity?

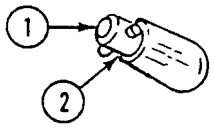

NO

YN

1. Repair dome light assembly (WP 0222 00).
2. Verify no faults found.

YES

2Y

1. Replace dome light bulbs (WP 0222 00).
2. Verify no faults found.

BY

1. Turn MASTER SWITCH OFF.
2. Remove instrument panel for access (WP 0217 00).
3. Remove harness 12268797 circuit 38 plug (1) from harness 12349858 circuit 38 jack (2).
4. Remove harness 12349858 circuit 27 plug (3) from instrument panel circuit breaker jack (4).
5. Measure resistance between harness 12349858 circuit 38 jack (2) and circuit 27 plug (3).
6. Does multimeter read 0 ohms?

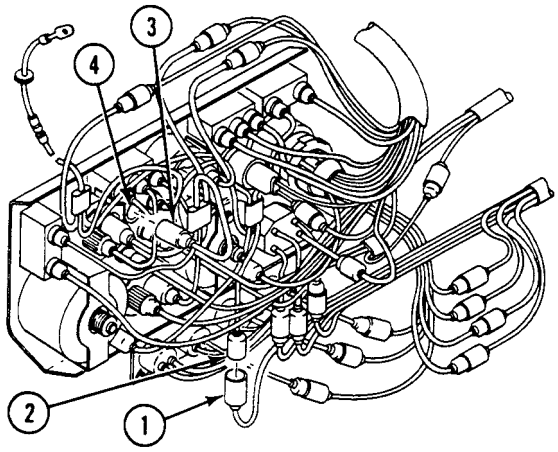

NO →

BYN

1. Install harness 2268797 plug on dome light jack.
2. Repair harness 12349858 circuit 38 (WP 0189 00).
3. Verify no faults found.

YES ↓

B2Y

1. Repair harness 12268797 circuit 38 (WP 0189 00).
2. Verify no faults found.

ELECTRICAL INSTALLATION WIRING DIAGRAM 0032 00

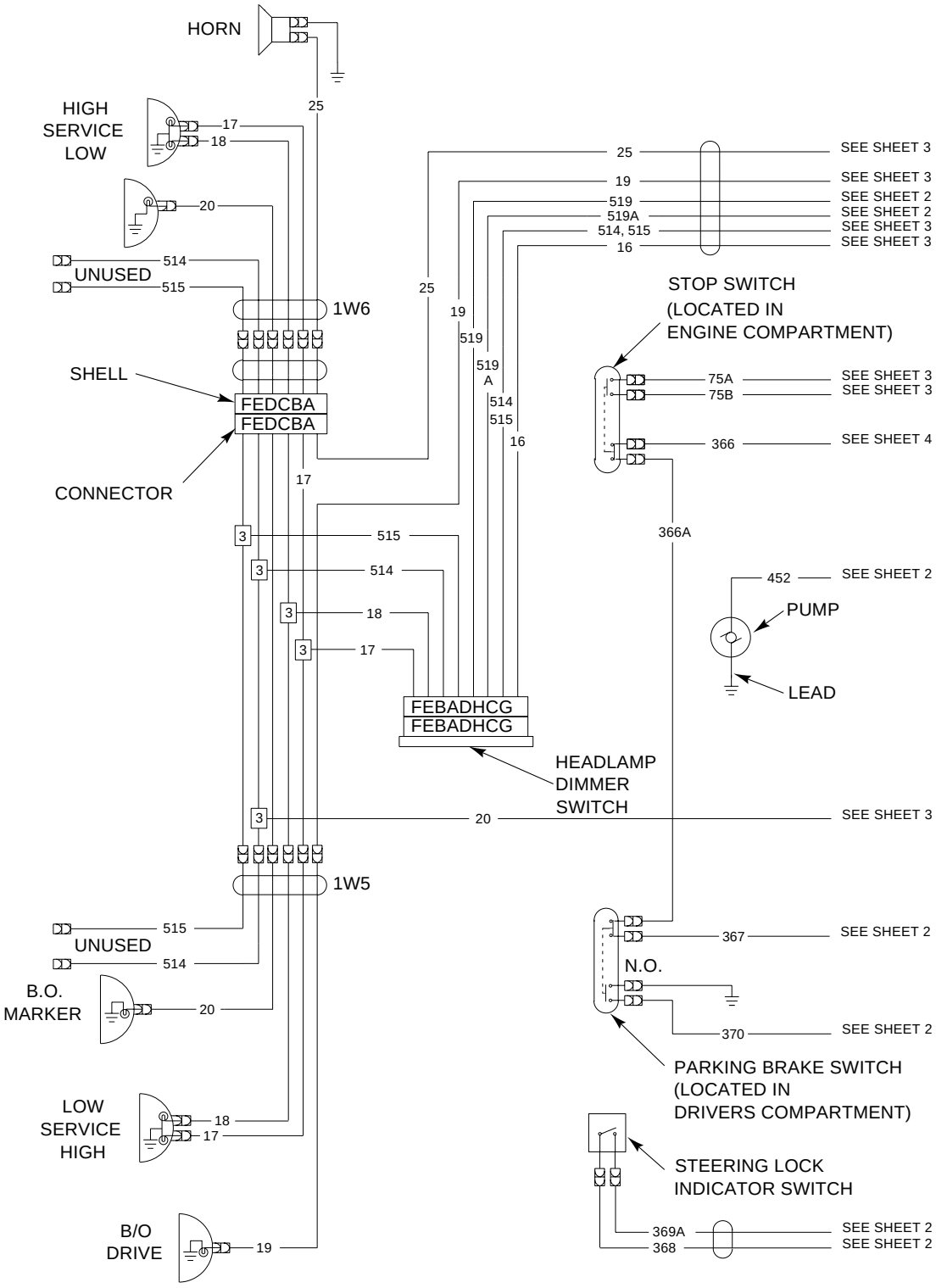

Sheet 1 of 7

ELECTRICAL INSTALLATION WIRING DIAGRAM—Continued 0032 00

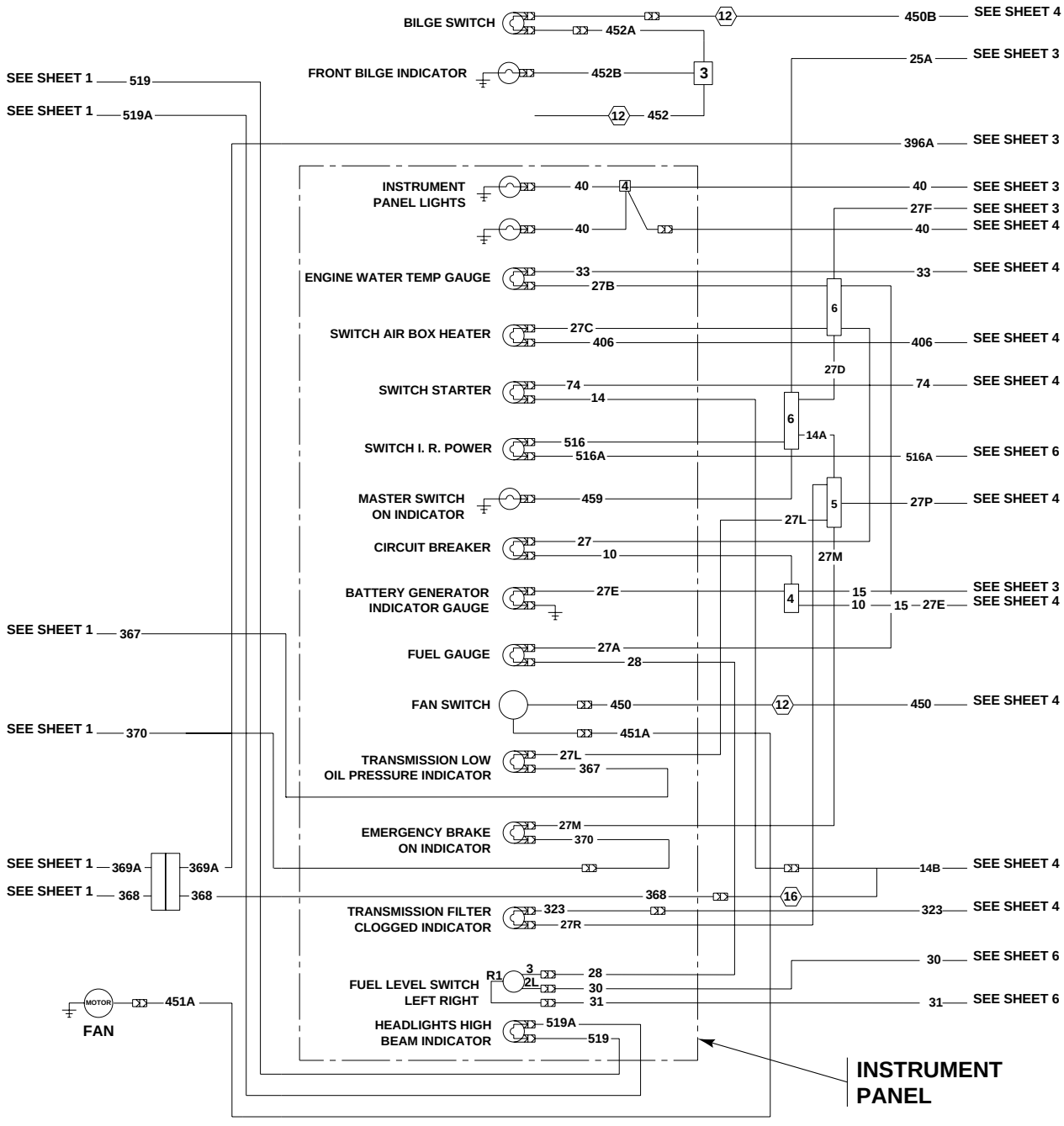

Sheet 2 of 7

ELECTRICAL INSTALLATION WIRING DIAGRAM—Continued 0032 00

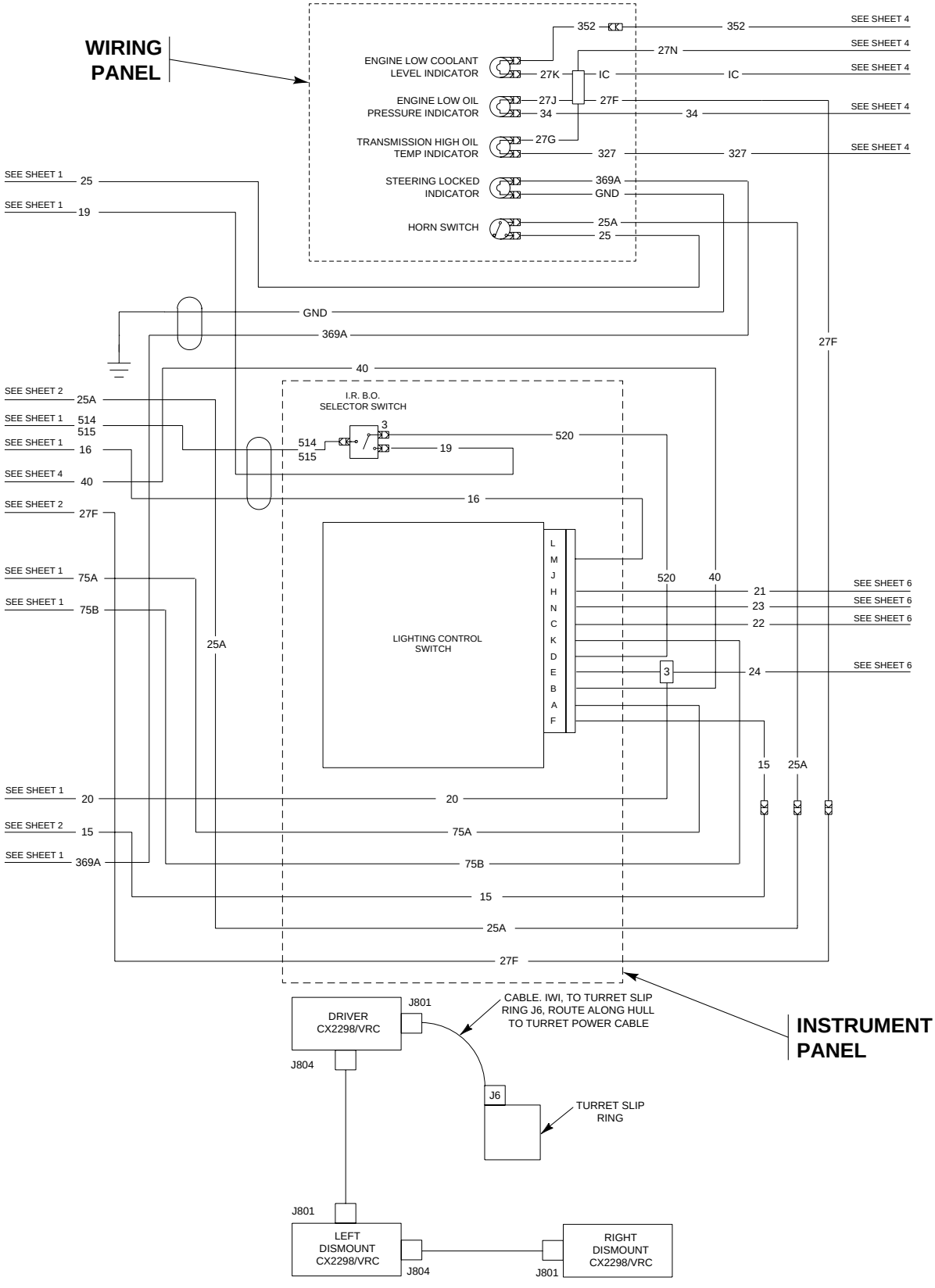

ELECTRICAL INSTALLATION WIRING DIAGRAM—Continued 0032 00

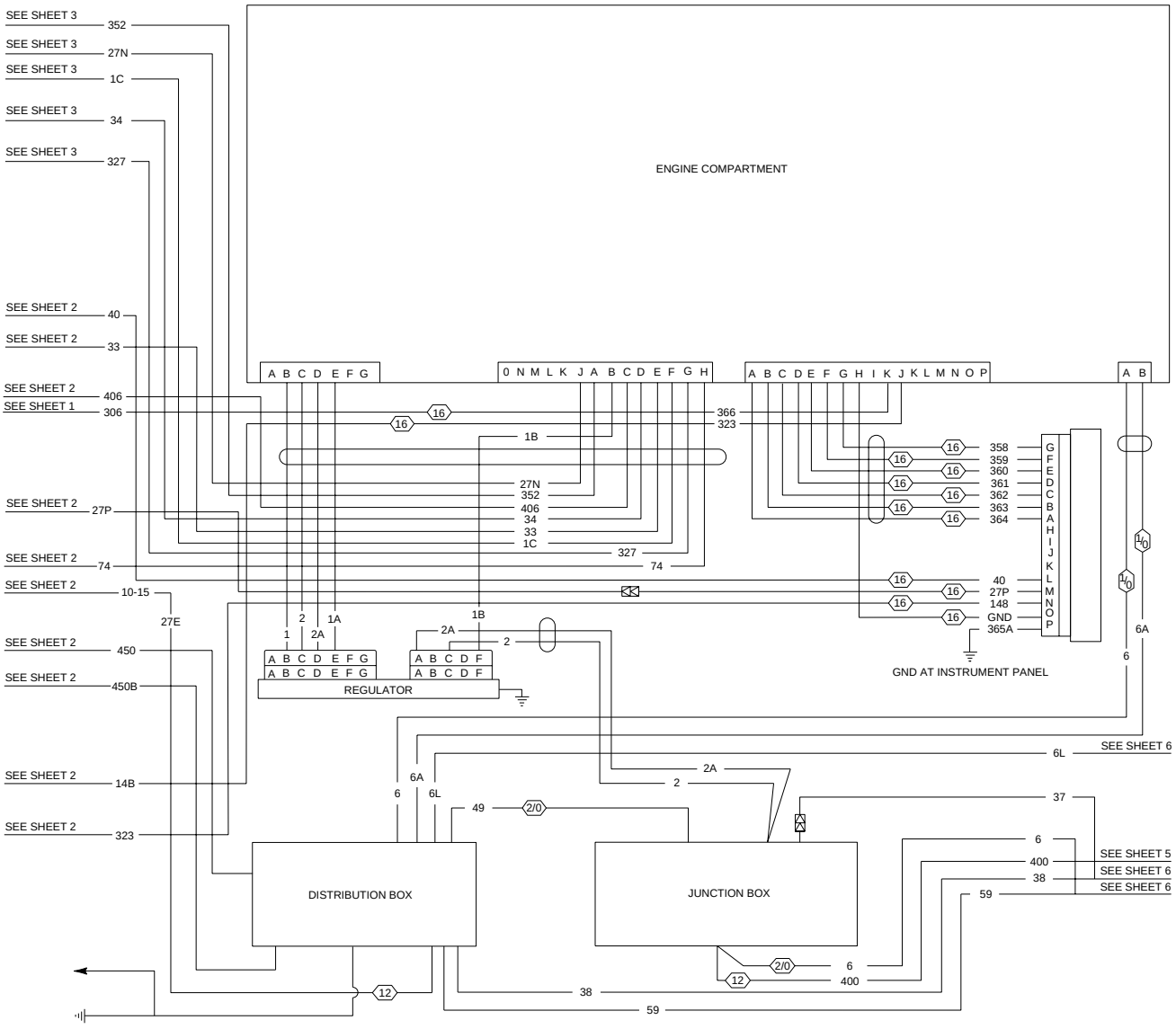

Sheet 4 of 7

ELECTRICAL INSTALLATION WIRING DIAGRAM—Continued 0032 00

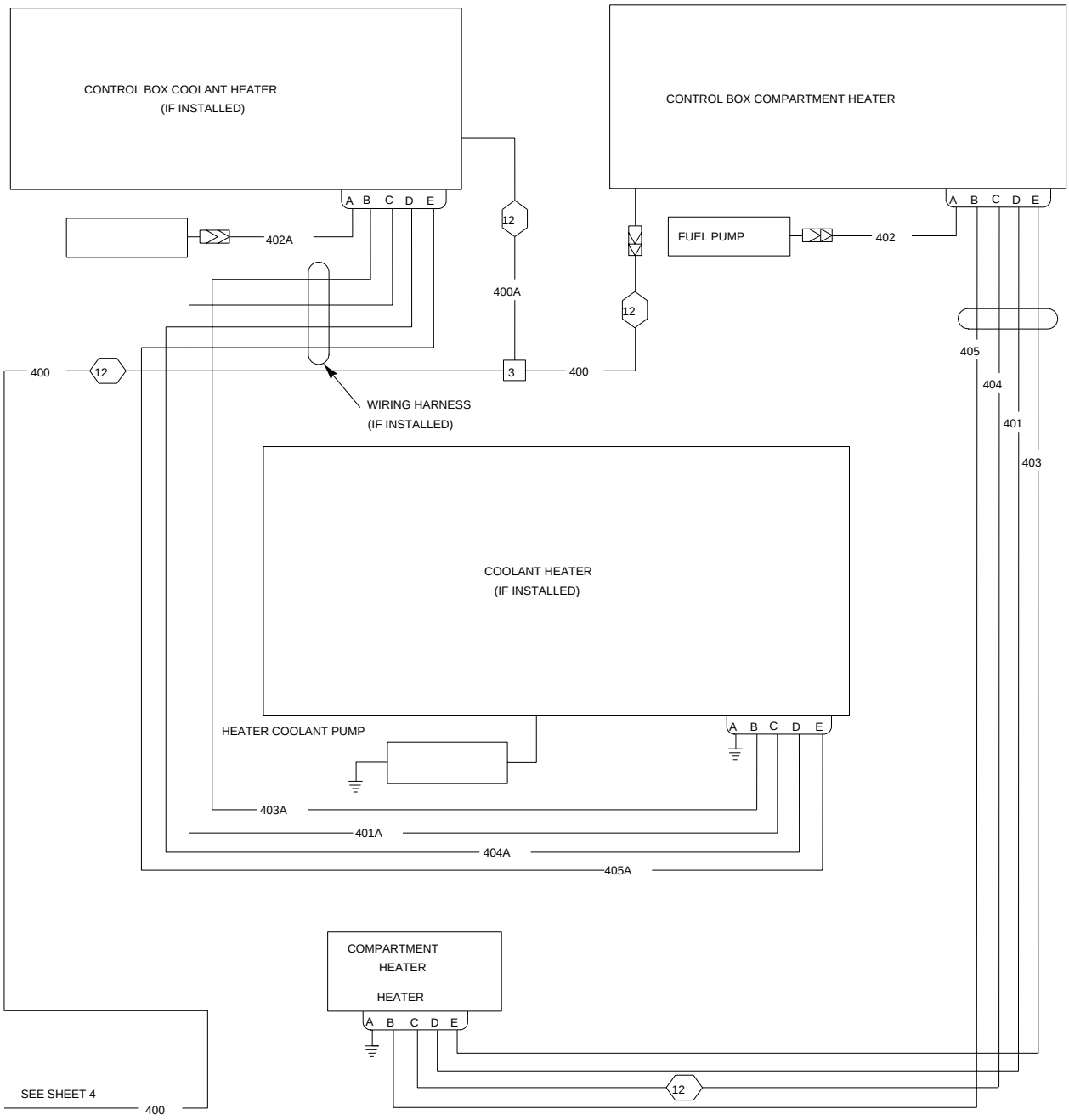

Sheet 5 of 7

ELECTRICAL INSTALLATION WIRING DIAGRAM—Continued 0032 00

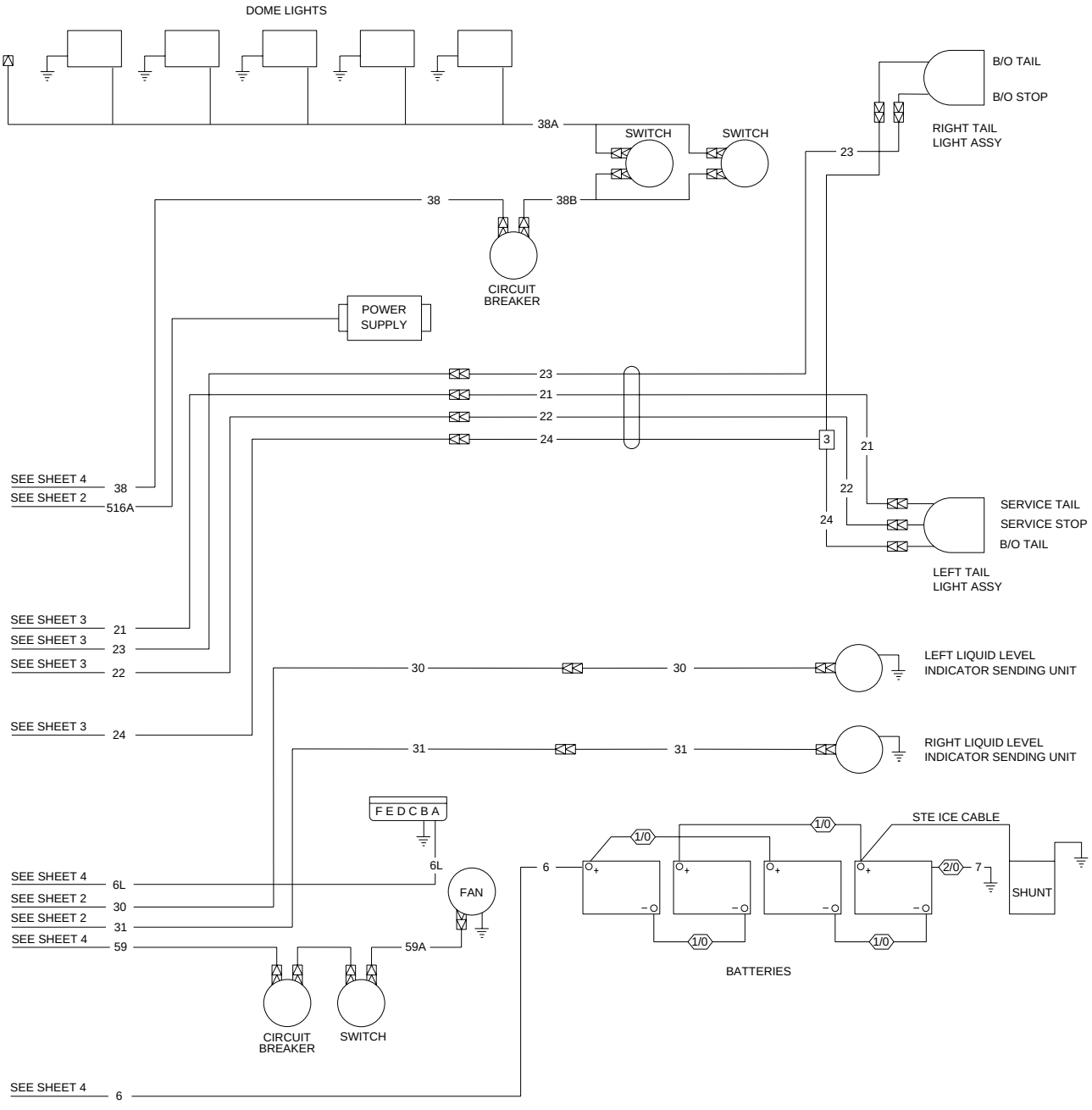

Sheet 6 of 7

ELECTRICAL INSTALLATION WIRING DIAGRAM—Continued **0032 00**

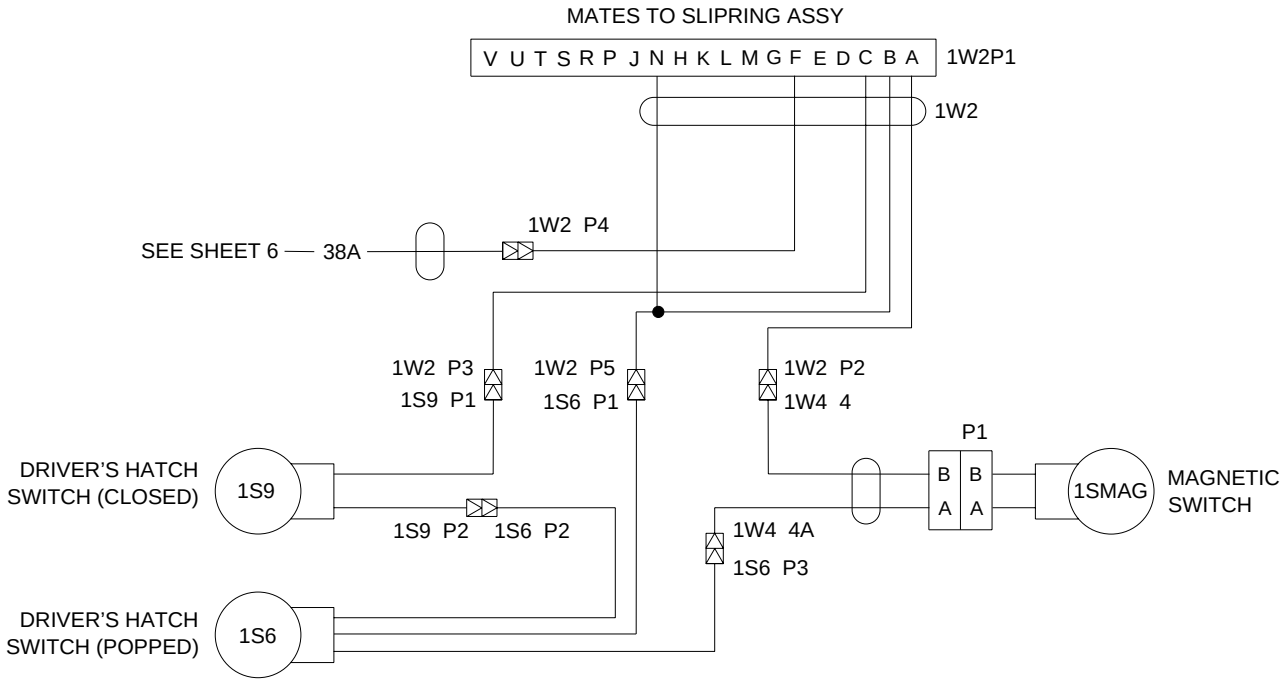

Sheet 7 of 7

MASTER SWITCH ON INDICATOR DOES NOT LIGHT 0033 00

INITIAL SETUP:

Maintenance Level

Unit

References

TM 9-2350-366-10

Tools and Special Tools

General mechanic's tool kit: automotive (WP 0397 00, Item 64)

Multimeter (WP 0397 00, Item 30)

Equipment Condition

Engine stopped (TM 9-2350-366-10-1)

Vehicle blocked (TM 9-2350-366-10-1)

Personnel Required

Unit Mech 63T10

Helper (H)

T

1. Remove MASTER SWITCH ON indicator cover lens (1), gasket (2), bulb (3), and gasket (4).
2. Check continuity between bulb center contact and bulb base.
3. Does multimeter show continuity?

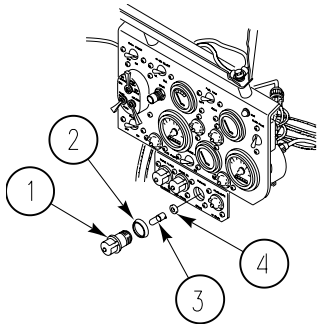

NO → **TN**

1. Replace MASTER SWITCH bulb (WP 0246 00).
2. Verify no faults found.

YES

Y

1. Turn MASTER SWITCH ON.
2. Is BATTERY/GENERATOR indicator in the green zone?

NO → GO TO **BY** (PAGE 0033 00-4)

YES

MASTER SWITCH ON INDICATOR DOES NOT LIGHT—Continued 0033 00

2Y

1. Turn MASTER SWITCH OFF.
2. Remove instrument panel for access (WP 0217 00).
3. Remove harness 10933038 circuit 10 plug (1) and cable assembly 12349858 circuit 27 plug (2) from instrument panel circuit breaker jacks (3) and (4).
4. Measure resistance between circuit breaker jacks (3) and (4).
5. Does multimeter read 0 ohms?

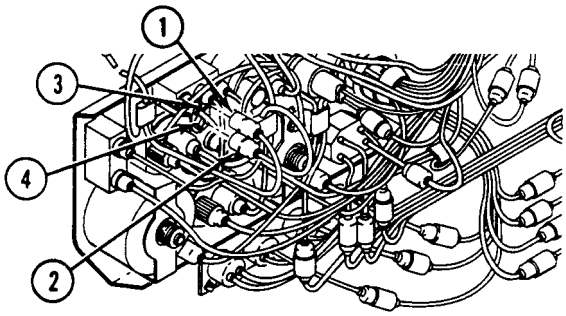

NO

2YN

1. Replace instrument panel circuit breaker (WP 0220 00).
2. Verify no faults found.

YES

3Y

1. Measure resistance between harness 10933038 circuit 10 plug pin and MASTER SWITCH panel power receptacle positive jack pin (1).
2. Does multimeter read 0 ohms?

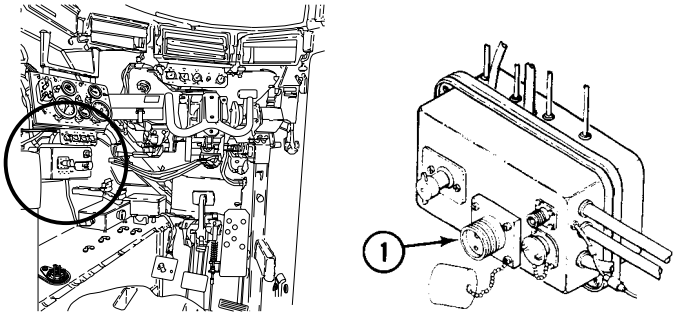

NO

3YN

1. Replace harness 10933038 (WP 0189 00).
2. Verify no faults found.

YES

4Y

1. Remove cable assembly 12349858 circuit 459 plug (1) from MASTER SWITCH indicator jack (1).
2. Measure resistance between cable assembly circuit 27 plug (1) and circuit 459 plug (1).
3. Does multimeter read 0 ohms?

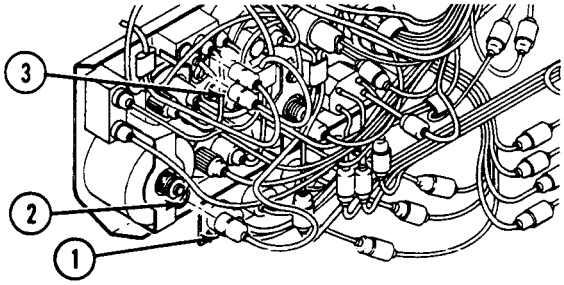

NO

4YN

1. Repair/replace cable 12349858 (WP 0189 00).
2. Verify no faults found.

YES

5Y

1. Replace indicator light assembly (WP 0219 00).
2. Verify no faults found.

BY

1. Turn MASTER SWITCH OFF.
2. Inspect vehicle batteries (WP 0239 00).
3. Are batteries in proper maintenance and well charged?

NO

BYN

1. Service vehicle batteries (WP 0239 00).
2. Verify no faults found.

YES

B2Y

1. Remove MASTER SWITCH panel (WP 0246 00).
2. Turn MASTER SWITCH ON.
3. Measure resistance between MASTER SWITCH terminals (1) and (1).
4. Does multimeter read 0 ohms?

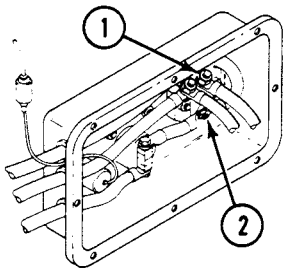

NO

B2YN

1. Replace MASTER SWITCH (WP 0245 00).
2. Verify no faults found.

YES

B3Y

1. Replace harness 10933038 (WP 0189 00).
2. Verify no faults found.

FUEL LEVEL INDICATOR MALFUNCTIONS 0034 00

INITIAL SETUP:

Maintenance Level

Unit

Tools and Special Tools

General mechanic's tool kit: automotive (WP 0397 00, Item 64)
Multimeter (WP 0397 00, Item 30)
Jumper wire

Personnel Required

Unit Mech 63T10

References

TM 9-2350-366-10-1

Equipment Condition

Engine stopped (TM 9-2350-366-10-1)

Vehicle blocked (TM 9-2350-294-10-1)

T

1. Does indicator malfunction with FUEL TANK indicator switch on LEFT and on RIGHT?

NO → GO TO **BY** (PAGE 0034 00-4)

YES ↓

Y

1. Remove instrument panel for access (WP 0220 00).
2. Remove circuit 30 plug (1) from FUEL TANK switch jack (2).
3. Remove circuit 31 plug (3) from FUEL TANK switch jack (4).
4. Remove circuit 28 plug (5) from FUEL TANK switch jack (6).
5. Turn FUEL TANK switch to LEFT and measure resistance between FUEL TANK switch jack (6) and FUEL TANK switch jack (4).
6. Turn FUEL TANK switch to RIGHT and measure resistance between FUEL TANK switch jack (1) and FUEL TANK switch jack (2).
7. Did multimeter read 0 ohms both times?

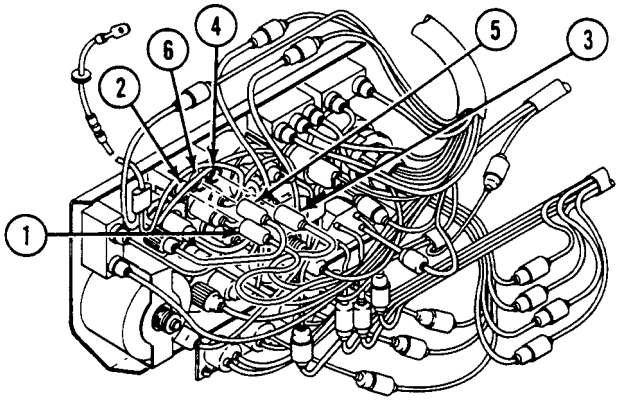

NO →

YN

1. Replace FUEL TANK select switch (WP 0125 00).
2. Verify no faults found.

YES ↓

2Y

1. Remove circuit 27 plug (1) from instrument panel circuit breaker jack (2).
2. Remove circuit 27A plug (3) from fuel lever indicator jack (4).
3. Check continuity between circuit 27 plug (1) and circuit 27A plug (3).
4. Does multimeter read 0 ohms?

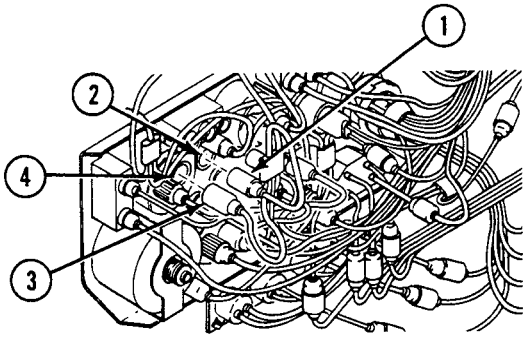

NO →

2YN

1. Install circuit 30 and 31 leads on FUEL TANK switch.
2. Replace cable special purpose instrument panel (WP 0182 00).
3. Verify no faults found.

YES ↓

3Y

1. Install circuit 30 and 31 plugs on FUEL TANK switch.
2. Remove circuit 28 plug (1) from FUEL LEVEL indicator jack (2).
3. Check continuity between circuit 28 plugs (1) and (3).
4. Does multimeter read 0 ohms?

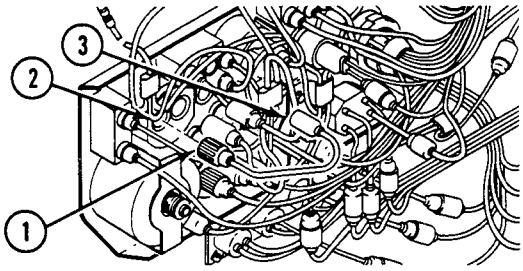

NO →

3YN

1. Replace lead 12268805 (WP 0189 00).
2. Verify no faults found.

YES ↓

4Y

1. Install circuit 28 plug on FUEL TANK switch jack.
2. Replace FUEL LEVEL indicator (WP 0124 00).
3. Verify no faults found.

BY

1. Remove harness 137681 circuit 30 (left tank) plug (1) or circuit 31 (right tank) plug from failing fuel tank jack (2).
2. Turn FUEL TANK switch to failing side.
3. Does indicator read full scale?

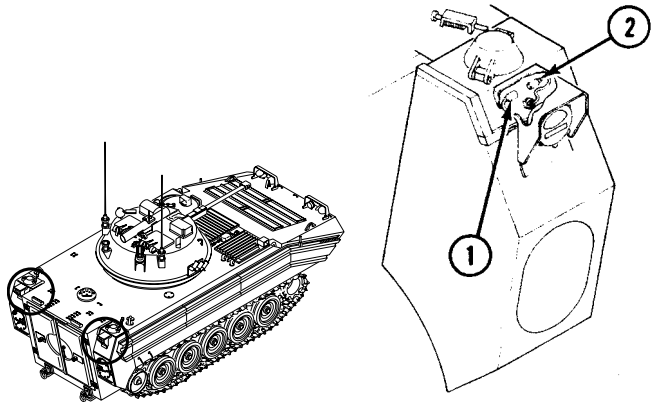

NO

BYN

1. Replace harness 137681 circuit 30 or 31 (WP 0187 00).
2. Verify no faults found.

YES

B2Y

1. Install jumper wire between harness 137681 circuit 30 or 31 and ground.
2. Does fuel indicator read empty?

NO

GO TO **CY** (PAGE 0034 00-6)

YES

B3Y

1. Access failing fuel level transmitter (WP 0124 00).
2. Remove lead 12268804-1 (or -2) plug (1) from failing transmitter jack (2).
3. Check continuity between plugs (1) and (3).
4. Does multimeter read 0 ohms?

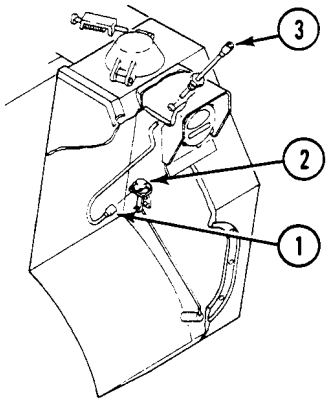

NO →

B3YN

1. Replace FUEL QUANTITY transmitter lead 12268804-1 (or -2) (WP 0124 00).
2. Verify no faults found.

YES ↓

B4Y

1. Replace FUEL QUANTITY transmitter (WP 0124 00)
2. Verify no faults found.

CY

1. Remove instrument panel for access (WP 0220 00).
2. Remove harness 137681 circuit 30 plug (left tank) (1) or circuit 31 plug (right tank) (2) from FUEL TANK switch jack (3) or jack (4).
3. Remove circuit 28 plug (5) from FUEL TANK switch jack (6).
4. Check continuity between exposed jack pins on FUEL TANK switch (3).
5. Does multimeter read 0 ohms?

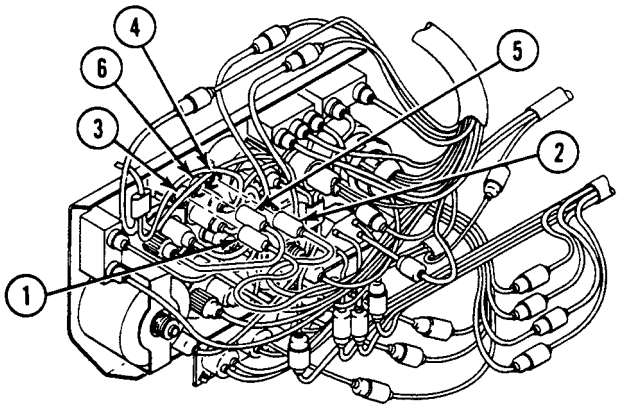

NO

CYN

1. Install harness circuit 30 or 31 on fuel tank transmitter.
2. Replace FUEL TANK switch (WP 0125 00).
3. Verify no faults found.

YES

C2Y

1. Replace harness 137681 circuit 30 or 31 (WP 0215 00).
2. Verify no faults found.

HIGH BEAM INDICATOR LIGHT DOES NOT WORK 0035 00

INITIAL SETUP:

Maintenance Level

Unit

References

TM 9-2350-366-10-1

Tools and Special Tools

General mechanic's tool kit: automotive (WP 0397 00, Item 64)

Multimeter (WP 0397 00, Item 30)

Jumper wire

Equipment Condition

Engine stopped (TM 9-2350-366-10-1)

Vehicle blocked (TM 9-2350-366-10-1)

Personnel Required

Unit Mech 63T10

T

1. Check service and IR headlights TM 9-2350-366-10-1.
2. Do all lights work properly?

NO → **TN**

1. Go to: Service and/or IR Headlights do not Light (WP 0035 00).

YES

Y

1. Remove headlight high beam indicator light cover lens (1) and gasket (2).
2. Remove high beam indicator bulb (3) and gasket (4).
3. Measure resistance between light assembly center contact (5) and ground.
4. Does multimeter read 0 ohms?

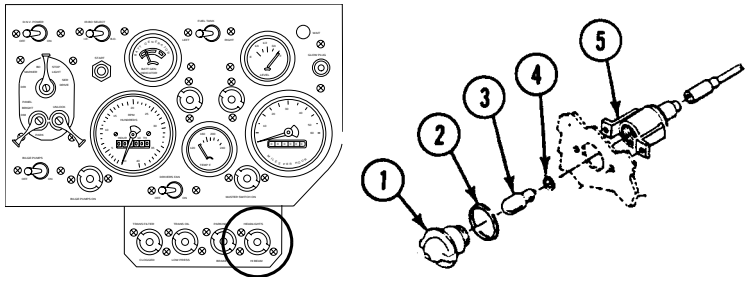

NO → **YN**

1. Replace light assembly (WP 0231 00).
2. Verify no faults found.

YES

HIGH BEAM INDICATOR LIGHT DOES NOT WORK—Continued 0035 00

2Y

1. Check continuity between light assembly bulb base contact (1) and ground.
2. Is there continuity?

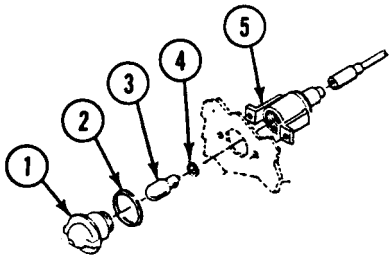

NO →

2YN

1. Replace headlight high beam indicator bulb (WP 0231 00).
2. Verify no faults found.

YES ↓

3Y

1. Remove two screws (1), washers (2), and dimmer switch (3)
2. Remove harness 12349881-3 plug (4) from dimmer switch jack (5).
3. Measure resistance between dimmer switch jack (5), pins D (6) and B (7), and between pins F (8) and H (9).
4. Did multimeter read 0 ohms for both measurements?

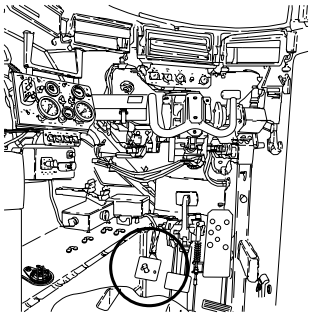

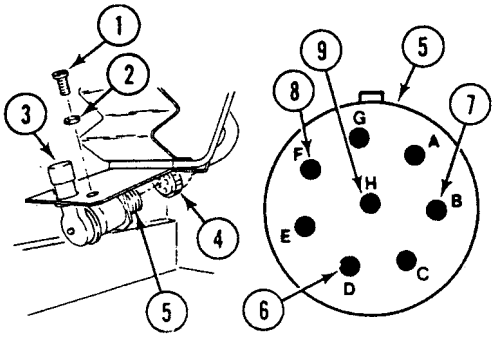

NO →

3YN

1. Replace dimmer switch (WP 0248 00).
2. Verify no faults found.

YES ↓

4Y

1. Install jumper wire between harness 12349881-3 dimmer switch plug (1), pins D (2) and H (3).
2. Remove instrument panel for access (WP 0220 00).
3. Remove harness 12349881-3 circuit 519/519A plug (4) from high beam indicator light jack (5).
4. Measure resistance between harness 12349881-3 circuit 519/519A plug pins (4).
5. Does multimeter read 0 ohms?

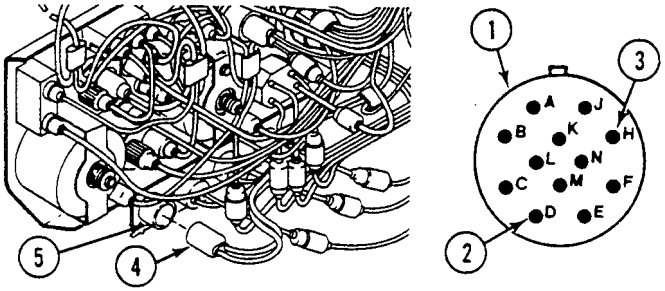

NO →

4YN

1. Faulty harness 12349881-3 circuits 519 and 519A.
2. Notify supervisor.

YES ↓

5Y

1. Install dimmer switch and plug.
2. Replace high beam indicator light assembly (WP 0231 00).
3. Verify no faults found.

BATTERY/GENERATOR INDICATOR MALFUNCTIONS 0036 00

INITIAL SETUP:

Maintenance Level

Unit

Tools and Special Tools

General mechanic's tool kit: automotive (WP 0397 00, Item 64)
Multimeter (WP 0397 00, Item 30)

Personnel Required

Unit Mech 43T10

References

TM 9-2350-366-10-1

Equipment Condition

Engine stopped (TM 9-2350-366-10-1)

Vehicle blocked (TM 9-2350-366-10-1)

T

1. Remove instrument panel for access (WP 0220 00).
2. Remove circuit 27E plug (1) from battery generator indicator jack (2).
3. Remove circuit 10 plug (3) from instrument panel circuit breaker jack (4).
4. Check continuity between circuit 27E plug (1) and circuit 10 plug (3).
5. Does multimeter show continuity?

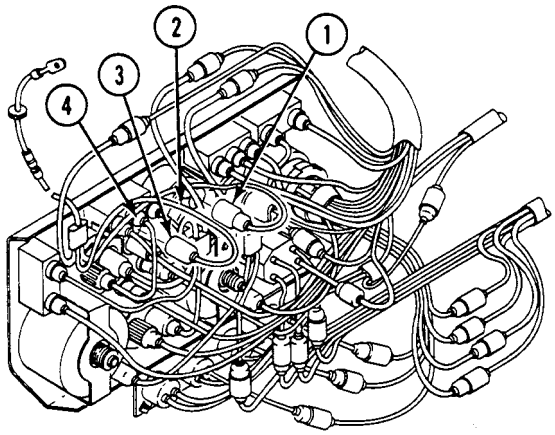

NO

TN

1. Replace harness 10933038 (WP 0216 00).
2. Verify no faults found.

YES

Y

1. Replace battery/generator indicator (WP 0221 00).
2. Verify no faults found.

PARKING BRAKE INDICATOR MALFUNCTIONS 0037 00

INITIAL SETUP:

Maintenance Level

Unit

Tools and Special Tools

General Mechanic's Tool Kit: Automotive (WP 0397 00, Item 64)
Multimeter (WP 0397 00, Item 30)
Jumper Wire

Personnel Required

Unit Mechanic 63T10
Helper (H)

References

TM 9-2350-366-10-1

Equipment Condition

Engine stopped (TM 9-2350-366-10-1)
Vehicle blocked (TM 9-2350-366-10-1)

T

1. Remove PARKING BRAKE indicator cover lens (1), gasket (2), bulb (4), and gasket (3).
2. Check continuity between bulb center contact and bulb base.
3. Does multimeter show continuity?

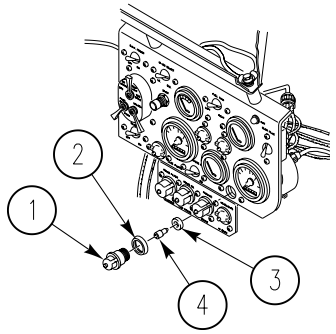

NO →

TN

1. Replace indicator bulb (WP 0219 00).
2. Verify no faults found.

YES ↓

PARKING BRAKE INDICATOR MALFUNCTIONS—Continued 0037 00

Y

1. Install PARKING BRAKE indicator cover lens, gasket, bulb, and gasket.
2. Release parking brake.
3. Manually depress HAND BRAKE indicator switch (1).
4. Observe PARKING BRAKE indicator.
5. Release HAND BRAKE indicator switch (1).
6. Did indicator fail to light with switch depressed or fail to go off with switch released?

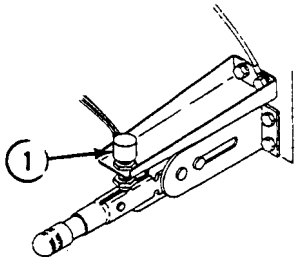

NO

YN

1. Adjust PARKING BRAKE indicator switch .
2. Verify no faults found.

YES

2Y

1. Remove harness 12349881-3 circuit 370 plug (1) from PARKING BRAKE light switch jack (2).
2. Check continuity between PARKING BRAKE light switch jack (2) and ground with PARKING BRAKE switch depressed.
3. Does multimeter show continuity?

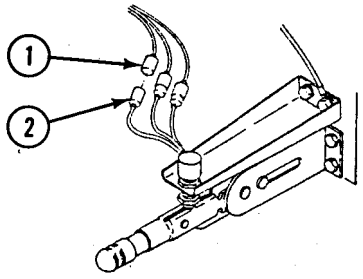

NO

2YN

1. Replace PARKING BRAKE switch (WP 0286 00).
2. Verify no faults found.

YES

3Y

1. Install jumper wire between PARKING BRAKE LIGHT switch harness 12349881-3 circuit 370 plug (1) and ground.
2. Remove instrument panel for access (WP 0220 00).
3. Remove harness 12349881-3 circuit 370 plug (2) from cable assembly 12349858 circuit 370 jack (3).
3. Check continuity between harness 12349881-3 circuit 370 (2) and ground.
4. Does multimeter show continuity?

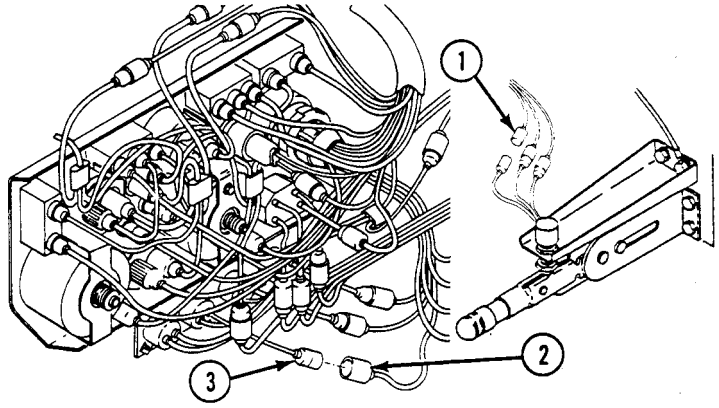

NO →

3YN

1. Faulty harness 12349881-3 circuit 370. Beyond unit maintenance repair.
2. Notify supervisor.

YES ↓

4Y

1. Remove jumper wire from harness 12349881-3 circuit 370.
2. Install harness 12349881-3 plug (1) on PARKING BRAKE light switch jack (2).
3. Remove cable assembly 12349858 circuit 27M plug (3) from PARKING BRAKE indicator jack (4).
4. Check continuity between cable assembly 12349858 circuit 27 plug (3) and circuit 27M plug (1).
5. Check continuity between cable assembly 12349858 circuit 27 (3) and circuit 370 plugs.
6. Does multimeter show continuity for both readings?

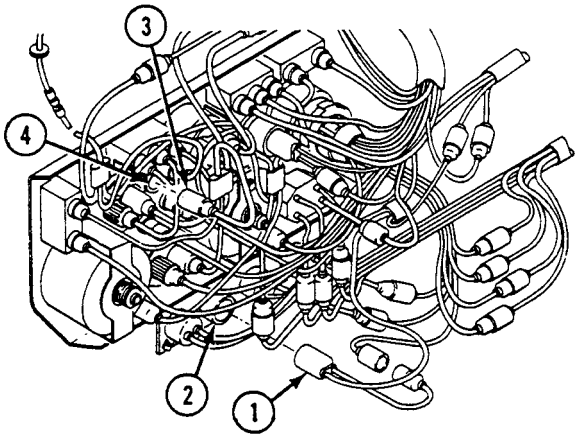

NO

4YN

1. Replace cable 12349858 (WP 0189 00).
2. Verify no faults found.

YES

5Y

1. Replace indicator light assembly (WP 0219 00).
2. Verify no faults found.

COOLANT TEMP INDICATOR MALFUNCTIONS 0038 00

INITIAL SETUP:

Maintenance Level

Unit

Tools and Special Tools

General Mechanic's Tool Kit: Automotive (WP 0397 00, Item 64)
Jumper Wire
Multimeter (WP 0397 00, Item 30)
Ste/Ice Test Set (WP 0397 00, Item 60)

Personnel Required

Unit Mechanic 63T10

References

TM 9-2350-366-10-1
TM 9-2350-366-10-2

Equipment Condition

Engine stopped (TM 9-2350-366-10-1)
Vehicle blocked (TM 9-2350-366-10-1)
Turret rotated to 3200 mils (TM 9-2350-366-10-2)
Power plant access panels removed (WP 0308 00)
Driver's power plant access panel removed (WP 0312 00)
Front VISMOD access panels removed (WP 0307 00)

T

1. Remove harness 12349873-1 circuit 33 plug (1) from water temperature transmitter jack (2).
2. Turn MASTER SWITCH ON.
3. Is TEMP indicator needle in full left (cold) position?

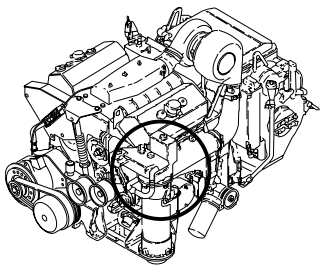

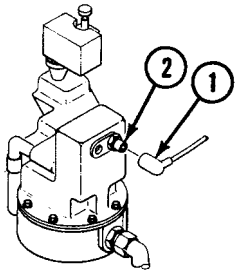

NO → GO TO **BY** (PAGE 0038 00-3)

YES ↓

Y

1. Turn MASTER SWITCH OFF.
2. Install jumper wire between harness 12349873-1 circuit 33 plug and ground.
3. Observe TEMP indicator needle.
4. Turn MASTER SWITCH ON for two seconds.
5. Did TEMP indicator needle move to full right (hot) position?

NO → GO TO **CY** (PAGE 0038 00-4)

YES

2Y

1. Remove jumper wire.
2. Replace water temperature transmitter (WP 0205 00).
3. Verify no faults found.

BY

1. Turn MASTER SWITCH OFF.
2. Remove harness 12349873-1 plug (1) from harness 12349881-3 jack (2) at vehicle bulkhead.
3. Turn MASTER SWITCH ON.
4. Is TEMP indicator still not in full left (cold) position?

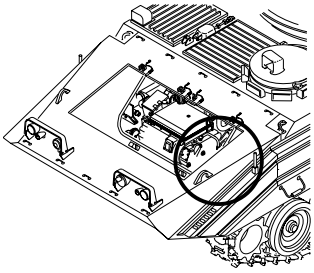

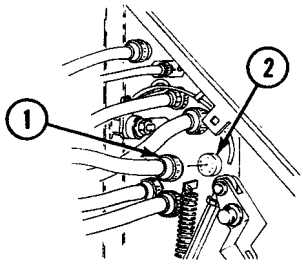

NO →

BYN

1. Replace harness 12349873-1 circuit 33 (WP 0189 00).
2. Verify no faults found.

YES ↓

B2Y

1. Turn MASTER SWITCH OFF.
2. Remove instrument panel for access (WP 0220 00).
3. Remove harness 12349881-3 circuit 33 plug (1) from TEMP indicator jack (2).
4. Measure resistance between harness 12349881-3 circuit 33 plug (1) and ground.
5. Does multimeter read 0 ohms?

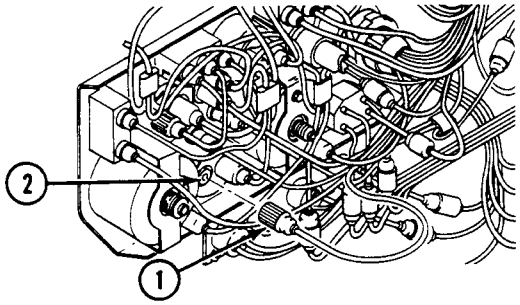

NO →

B2YN

1. Faulty harness 12349881-3 circuit 33. Beyond unit maintenance repair.
2. Notify supervisor.

YES ↓

B3Y

1. Install harness 12349881-3 plug on harness 12349881-3 jack at vehicle bulkhead.
2. Install harness 12349873-1 circuit 33 plug on TEMP transmitter jack.
3. Replace TEMP indicator (WP 0205 00).
4. Verify no faults found.

CY

1. Remove cable 12349858 circuit 27B plug (1) from coolant temperature gauge (2).
2. Turn MASTER SWITCH ON.
3. Measure voltage between harness 12349858 circuit 27B plug pin (1) and ground.
4. Does multimeter read at least 17 volts?

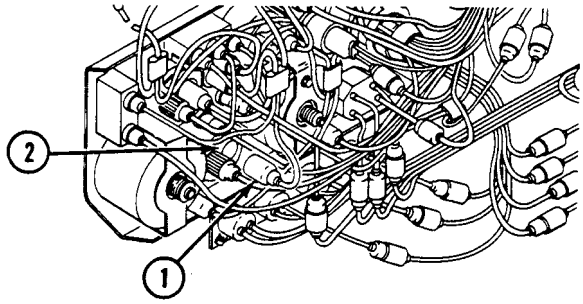

NO

CYN

1. Repair/replace cable 12349858 circuit 27B (WP 0189 00).
2. Verify no faults found.

YES

C2Y

1. Turn MASTER SWITCH OFF.
2. Remove harness 12349873-1 plug (1) from harness 12349881-3 jack (2) at vehicle bulkhead.
3. Check continuity between harness 12349873-1 plug (1), pin E (3), and ground.
4. Is there continuity?

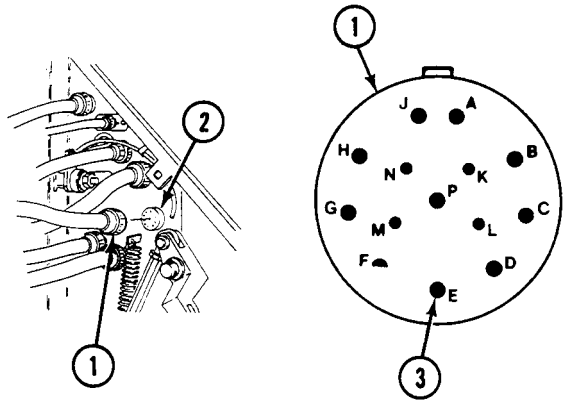

NO

C2YN

1. Repair harness 12349873-1 circuit 33 (WP 0189 00).
2. Verify no faults found.

YES

C3Y

1. Remove jumper wire.
2. Install harness 12349873-1 circuit 33 plug on water temperature transmitter.
3. Install jumper wire between harness 12349881-3 jack (1), pin E (2), and ground.
4. Remove harness 12349881-3 circuit 33 plug (3) from TEMP indicator jack (4).
5. Check continuity between harness 12349881-3 circuit 33 plug (3) and ground.
6. Is there continuity?

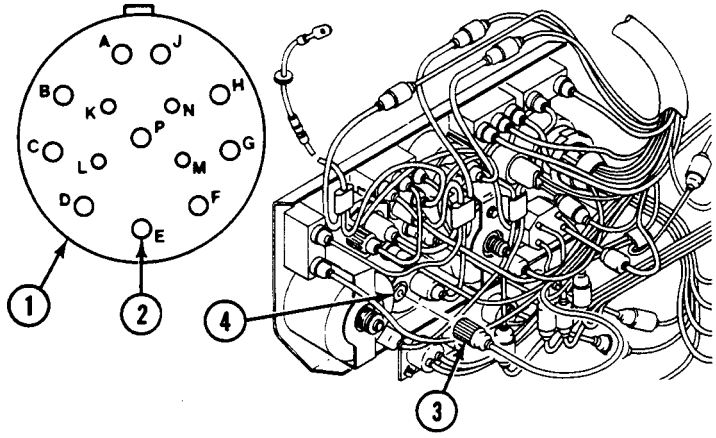

NO →

C3YN

1. Remove jumper wire.
2. Repair harness 12349881-3 circuit 33 (WP 0189 00).
3. Verify no faults found.

YES ↓

C4Y

1. Remove jumper wire.
2. Install harness 12349873-1 plug onto harness 12349881-3 jack at vehicle bulkhead.
3. Replace TEMP indicator (WP 0205 00).
4. Verify no faults found.

STEERING LOCKED INDICATOR MALFUNCTIONS 0039 00

INITIAL SETUP:

Maintenance Level

Unit

Tools and Special Tools

General Mechanic's Tool Kit: Automotive (WP 0397 00, Item 64)
Multimeter (WP 0397 00, Item 30)

Personnel Required

Unit Mechanic 63T10
Helper (H)

References

TM 9-2350-366-10-1
TM 9-2350-366-10-2

Equipment Condition

Engine stopped (TM 9-2350-366-10-1)
Vehicle blocked (TM 9-2350-366-10-1)
Turret rotated to 3200 mils (TM 9-2350-366-10-2)
Engine access panels removed (WP 0308 00)
Front VISMOD access panels removed (WP 0307 00)

T

1. Move steering wheel off center position and hold.
2. Turn MASTER SWITCH ON.
3. Is STEERING LOCKED indicator off?

NO → GO TO **BY** (PAGE 0039 00-2)

YES

Y

1. Move steering wheel to center position.
2. Does steering wheel lock in center position?

NO → **YN**

1. Go to: Steering Lock Malfunctions (WP 0063 00).

YES

2Y

1. Is STEERING LOCKED indicator on?

NO → GO TO **CY** (PAGE 0039 00-3)

YES

3Y

1. No faults found.

STEERING LOCKED INDICATOR MALFUNCTIONS—Continued **0039 00**

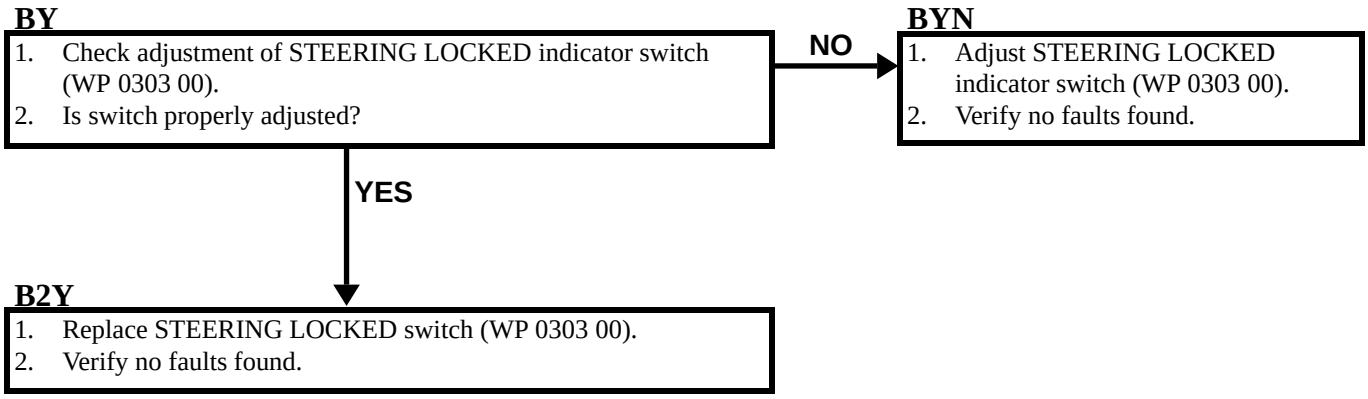

CY

1. Remove STEERING LOCKED indicator light cover lens (1), gasket (2), bulb (3), and gasket (4).
2. Check continuity between bulb center contact and base.
3. Does multimeter show continuity?

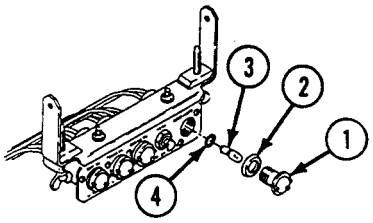

NO →

CYN

1. Replace STEERING LOCKED indicator bulb (WP 0303 00).
2. Verify no faults found.

YES ↓

C2Y

1. Install STEERING LOCKED indicator light cover lens, gasket, bulb, and gasket.
2. Inspect distance between STEERING LOCKED switch (1) and steering locked lever (2).
3. Is STEERING LOCKED switch touching steering locked lever?

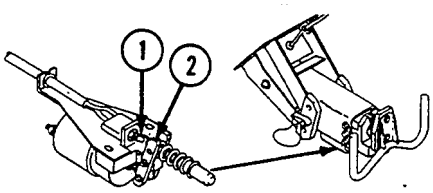

NO →

GO TO **DY** (PAGE 0039 00-4)

YES ↓

C3Y

1. Adjust STEERING LOCKED indicator switch (WP 0303 00).
2. Verify no faults found.

STEERING LOCKED INDICATOR MALFUNCTIONS—Continued 0039 00

DY

1. Remove harness 12354722 (solenoid-activated lock) or 12369685 (cable-activated lock) plug (1) from STEERING LOCKED indicator assembly jack (2) on back side of warning light panel.
2. Measure voltage between plug pins (1).
3. Does multimeter read less than 17 volts?

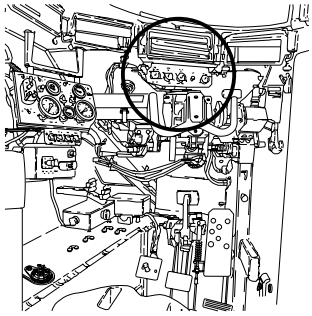

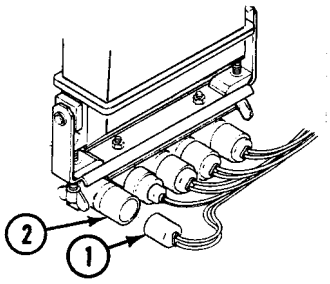

NO →

DYN

1. Replace STEERING LOCKED warning light assembly (WP 0218 00).
2. Verify no faults found.

YES ↓

D2Y

1. Turn MASTER SWITCH OFF.
2. For solenoid-activated lock, remove harness 12345722 plug (1) from harness 12349911 jack (2). For cable-activated lock, remove harness 12369685 plug (1) from harness 1236984 jack (2).
3. (H) For solenoid-activated lock, push and hold solenoid plunger while measuring resistance.
4. For solenoid-activated lock, measure resistance between harness 12349911 jack (2), pins A (3) to B (4), and C (5) to D (6). For Cable-activated lock, measure resistance between harness 12369684 jack (2), pins A (3) to B (4).
5. Did multimeter read more than 0 ohms either time?

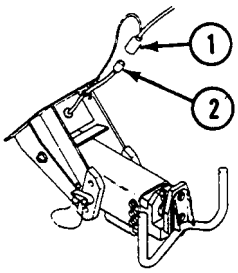

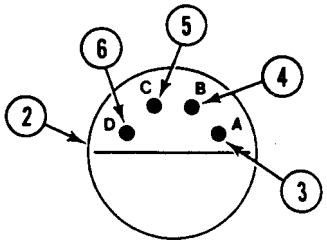

NO →

D2YN

1. Replace harness 12354722 (for solenoid-activated lock) or 12369685 (for cable-activated lock) circuit 369A and/or ground circuit (WP 0189 00).
2. Verify no faults found.

YES ↓

D3Y

1. Install harness 12369685 (for cable-activated lock) plug on STEERING LOCKED indicator jack.
2. For solenoid-activated lock, remove harness 12349911 lead 369A plug (1) and lead 369 plug (2) from STEERING LOCKED switch jacks (3) and (4). For cable-activated lock, remove harness 12369684 lead 368 plug (1) and lead 369A plug (2) from STEERING LOCKED switch jacks (3) and (4).
3. (H) For solenoid-activated lock, push and hold solenoid plunger while measuring resistance.
4. Measure resistance between STEERING LOCKED switch jacks (3) and (4).
5. Did multimeter read 0 ohms?

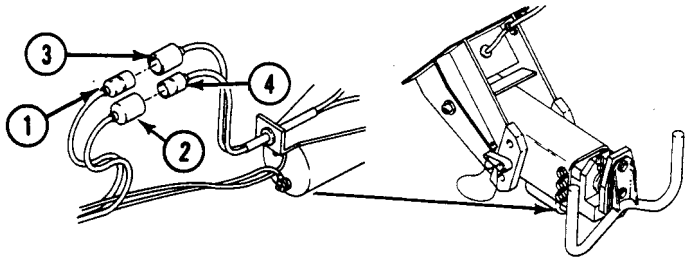

NO →

D3YN

1. Replace STEERING LOCKED switch (WP 0303 00)
2. Verify no faults found.

YES ↓

D4Y

1. Replace harness 12349911 (for solenoid-activated lock) circuit 369, 369A, 368, 368A or harness 12369684 (for cable-activated lock) circuit 369A and 368, and/or ground (WP 0189 00).
2. Verify no faults found.

ENGINE OIL LOW PRESSURE INDICATOR MALFUNCTIONS 0040 00

INITIAL SETUP:

Maintenance Level
Unit

Tools and Special Tools
General Mechanic's Tool Kit: Automotive (WP 0397 00, Item 64)
Jumper Wire
Multimeter (WP 0397 00, Item 30)

Personnel Required
Unit Mechanic 63T10

References
TM 9-2350-366-10-1

Equipment Condition
Engine stopped (TM 9-2350-366-10-1)
Vehicle blocked (TM 9-2350-366-10-1)
Power plant access panels removed (WP 0308 00)
Front VISMOD access panels removed (WP 0307 00)

T

1. Remove harness 12349873-1-1 circuit 34 plug (1) from engine oil low pressure transmitter (2).
2. Turn MASTER SWITCH ON.
3. Is ENGINE OIL LOW PRESSURE indicator off?

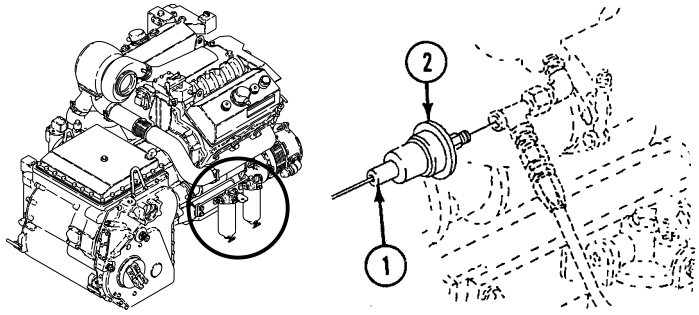

NO → GO TO **BY** (PAGE 0040 00-2)

YES

Y

1. Install jumper wire between harness 12349873-1-1 circuit 34 plug pin and ground.
2. Is ENGINE OIL LOW PRESSURE indicator on?

NO → GO TO **CY** (PAGE 0040 00-3)

YES

2Y

1. Replace engine oil low pressure transmitter (WP 0204 00).
2. Verify no faults found.

ENGINE OIL LOW PRESSURE INDICATOR MALFUNCTIONS—Continued 0040 00

BY

1. Remove harness 12349873-1-1 plug (1) from harness 12349881-3 jack (2) at vehicle bulkhead.
2. Is ENGINE OIL LOW PRESSURE indicator still on?

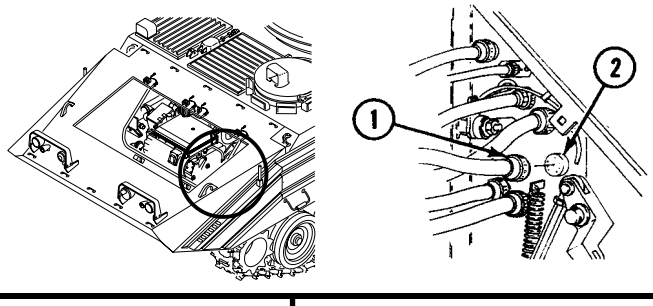

NO →

BYN

1. Replace harness 12349873-1-1 circuit 34 (WP 0189 00).
2. Verify no faults found.

YES ↓

B2Y

1. Remove ENGINE OIL LOW PRESSURE indicator cover lens (1), gasket (2), bulb (3), and gasket (4).
2. Remove harness 12349881-3 circuit 27J/34 plug (5) from ENGINE OIL LOW PRESSURE indicator jack (6).
3. Measure resistance between indicator jack pins (6) and ground, one at a time.
4. Does multimeter read 0 ohms for either measurement?

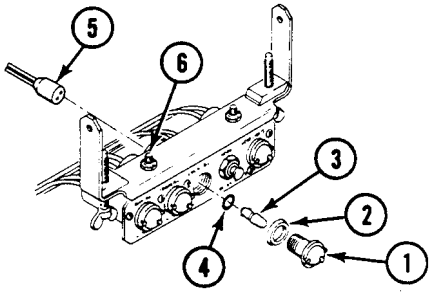

NO →

B2YN

1. Faulty harness 12349881-3 circuit 34. Beyond unit maintenance repair.
2. Notify supervisor.

YES ↓

B3Y

1. Replace ENGINE OIL LOW PRESSURE indicator light assembly (WP 0204 00).
2. Verify no faults found.

CY

1. Remove ENGINE OIL LOW PRESSURE indicator cover lens (1), gasket (2), bulb (3), and gasket (4) from indicator assembly (5).
2. Measure voltage between indicator assembly center contact (5) and ground.
3. Does multimeter read less than 17 volts?

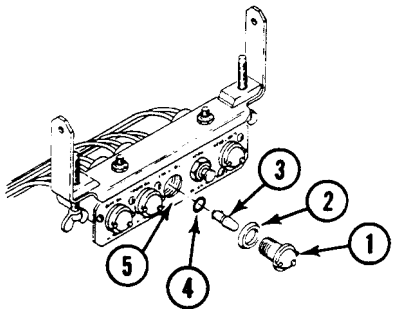

NO → GO TO **DY** (PAGE 0040 00-5)

YES

C2Y

1. Remove harness 12349881-3 circuit 27J/34 plug (1) from ENGINE OIL LOW PRESSURE indicator assembly jack (2).
2. Measure voltage between circuit 27J plug pin and ground.
3. Does multimeter read less than 17 volts?

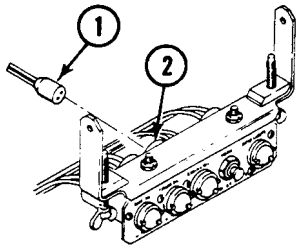

NO → **C2YN**

1. Replace ENGINE OIL LOW PRESSURE indicator assembly (WP 0204 00).
2. Verify no faults found.

YES

ENGINE OIL LOW PRESSURE INDICATOR MALFUNCTIONS—Continued **0040 00**

C3Y

1. Turn MASTER SWITCH OFF.
2. Remove instrument panel for access (WP 0220 00)
3. Remove harness 12349881-3 circuit 27F plug (1) from cable assembly 12349858 circuit 27F jack (2).
4. Measure resistance between harness 12349881-3 circuit 27J plug (1) and circuit 27F plug (2).
5. Does multimeter read 0 ohms?

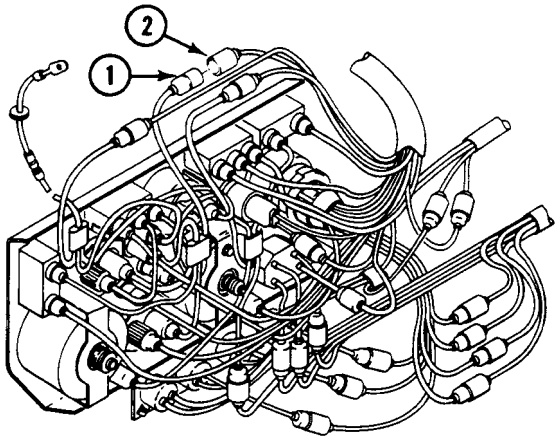

NO →

C3YN

1. Faulty harness 12349881-3 circuit 27F/27J. Beyond unit maintenance repair.
2. Notify supervisor.

YES ↓

C4Y

1. Repair cable 12349858 circuit 27F (WP 0189 00).
2. Verify no faults found.

DY

1. Remove harness 12349881-3 circuit 27J/34 plug (1) from ENGINE OIL LOW PRESSURE indicator assembly jack (2).
2. Measure resistance between circuit 34 plug pin and ground.
3. Does multimeter read less than 0 ohms?

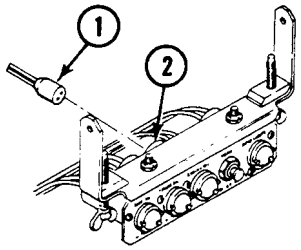

NO

DYN

1. Install harness 12349881-3 plug on ENGINE OIL LOW PRESSURE indicator jack.
2. Remove jumper wire.
3. Replace ENGINE OIL LOW PRESSURE switch (WP 0204 00).
4. Verify no faults found.

YES

D2Y

1. Remove harness 12349873-1-1 plug (1) from harness 12349881-3 jack (2) at vehicle bulkhead.
2. Measure resistance between harness 12349873-1-1 plug (1), pin D (3), and ground.
3. Does multimeter read 0 ohms?

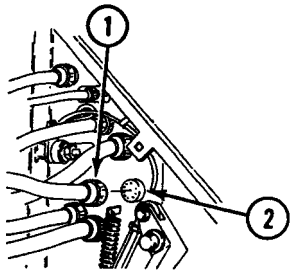

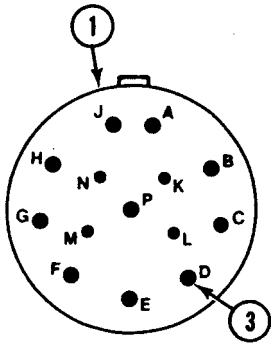

NO

D2YN

1. Remove jumper wire.
2. Install harness 12349881-3 plug on ENGINE OIL LOW PRESSURE indicator assembly jack.
3. Install indicator cover lens, gaskets, and bulb.
4. Replace harness 12349873-1-1 circuit 34 (WP 0189 00).
5. Verify no faults found.

YES

D3Y

1. Remove jumper wire.
2. Install harness 12349873-1-1 ENGINE OIL LOW PRESSURE switch.
3. Faulty harness 12349881-3 circuit 34. Beyond unit maintenance repair.
4. Notify supervisor.

TRANSMISSION OIL LOW PRESSURE INDICATOR MALFUNCTIONS 0041 00

INITIAL SETUP:

Maintenance Level

Unit

Tools and Special Tools

General mechanic's tool kit: automotive (WP 0397 00, Item 64)
Jumper wire
Multimeter (WP 0397 00, Item 30)

Personnel Required

Unit Mechanic 63T10

References

TM 9-2350-366-10

Equipment Condition

Engine stopped (TM 9-2350-366-10-1)
Vehicle blocked (TM 9-2350-366-10-1)
Engine access panels removed (WP 0309 00)
Front VISMOD access panels removed (WP 0307 00)
Parking brake off (TM 9-2350-366-10-1)
Service brake off (TM 9-2350-366-10-1)

T

1. Remove TRANS OIL LOW PRESS indicator cover lens (1), gasket (2), bulb (3), and gasket (4).
2. Check continuity between bulb base and bulb center contact.
3. Does multimeter read continuity?

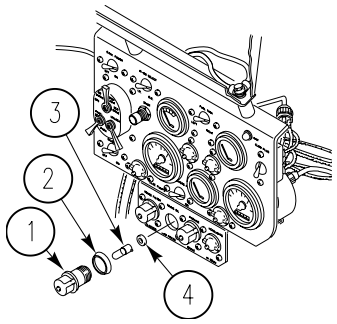

NO

TN

1. Replace TRANS OIL LOW PRESS bulb (WP 0212 00).
2. Verify no faults found.

YES

TRANSMISSION OIL LOW PRESSURE INDICATOR MALFUNCTIONS—Continued 0041 00

Y

1. Install TRANS OIL LOW PRESS bulb and cover lens.
2. Remove harness 12349810 circuit 366 plug (1) from TRANS OIL LOW PRESS switch assembly jack (2).
3. Turn MASTER SWITCH ON TM 9-2350-366-10-1.
4. Is TRANS OIL LOW PRESSURE indicator off?

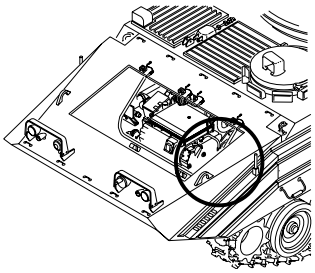

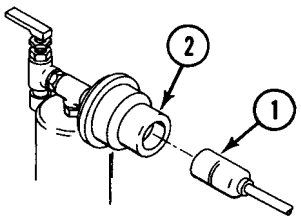

NO → GO TO **BY** (PAGE 0041 00-3)

YES

2Y

1. Install jumper wire between harness 12349810 circuit 366 plug and ground.
2. Is TRANS OIL LOW PRESS indicator on?

NO → GO TO **CY** (PAGE 0041 00-7)

YES

3Y

1. Replace TRANS OIL LOW PRESS switch (WP 0271 00).
2. Verify no faults found.

BY

1. Remove harness 12349810 plug (1) from harness 12349813 jack (2) at vehicle bulkhead.
2. Is TRANS OIL LOW PRESS indicator still on?

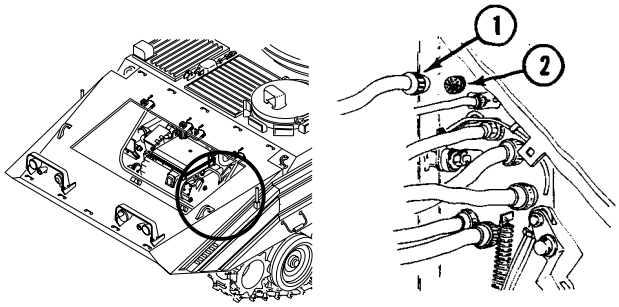

NO →

BYN

1. Replace transmission wiring harness, 12349810 (WP 0190 00).
2. Verify no faults found.

YES ↓

B2Y

1. Remove transmission controller wiring harness 12349813 circuit 366 plug (1) from harness 12349881-3 circuit 366 jack (2) behind instrument panel.
2. Is TRANS OIL LOW PRESS indicator still on?

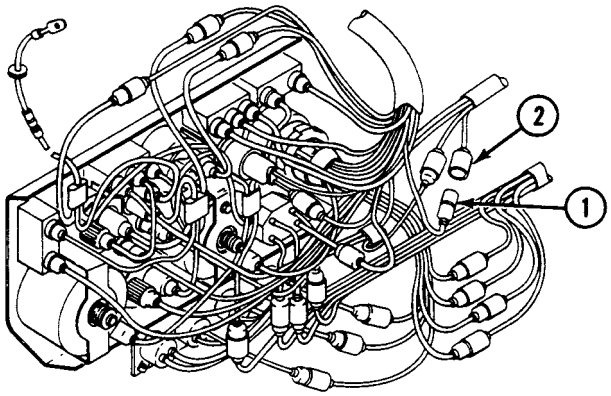

NO →

B2YN

1. Replace transmission controller wiring harness 12349813 (WP 0115 00).
2. Verify no faults found.

YES ↓

B3Y

1. Install transmission harness 12349810 plug on transmission controller harness 12349813 at vehicle bulkhead.
2. Install transmission harness 12349810 circuit 366 on TRANS OIL LOW PRESS switch.
3. Remove main wiring harness 12349881-3 circuit 366 plug (1) from STOP LIGHT switch jack (2).
4. Is TRANS OIL LOW PRESS indicator still on?

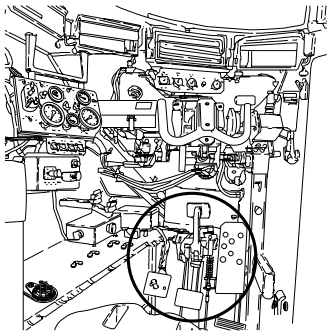

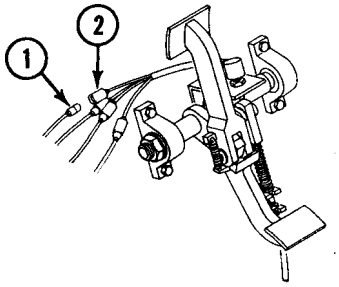

NO

B3YN

1. Faulty main wiring harness 12349881-3 circuit 366. Beyond unit maintenance repair.
2. Notify supervisor.

YES

B4Y

1. Install transmission controller wiring harness 12349813 circuit 366 plug on main wiring harness 12349881-3 circuit 366 jack.
2. Remove main harness 12349881-3 circuit 366A plug (1) from STOP LIGHT switch jack (2).
3. Is TRANS OIL LOW PRESS indicator still on?

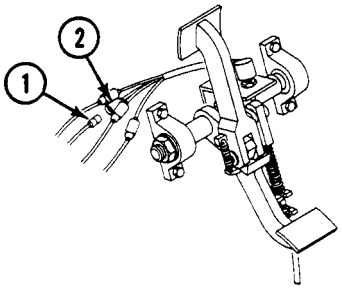

NO

B4YN

1. Replace BRAKE LIGHT switch (WP 0285 00).
2. Verify no faults found.

YES

B5Y

1. Install transmission controller harness 12349813 circuit 366 plug on STOP LIGHT switch circuit 366 jack.
2. Remove main wiring harness 12345881 circuit 366A plug (1) from PARKING BRAKE switch 366A jack (2).
3. Is TRANS OIL LOW PRESS indicator still on?

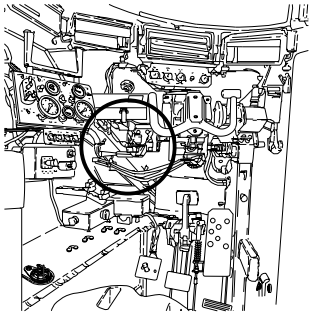

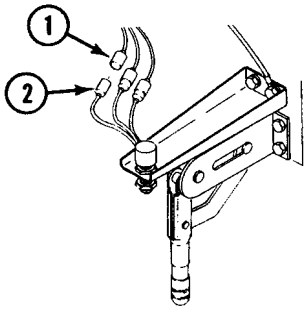

NO

B5YN

1. Faulty main wiring harness 12349881-3 circuit 366A. Beyond unit maintenance repair.
2. Notify supervisor.

YES

B6Y

1. Install main wiring harness 12349881-3 circuit 366A plug on STOP LIGHT switch 366A jack.
2. Remove main harness 12345881 circuit 367 plug (1) from PARKING BRAKE switch 366A jack (2).
3. Is TRANS OIL LOW PRESS indicator still on?

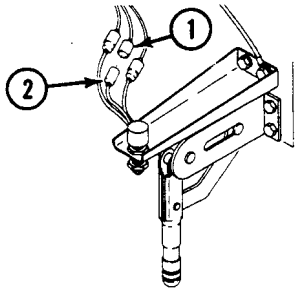

NO

B6YN

1. Replace PARKING BRAKE switch (WP 0286 00).
2. Verify no faults found.

YES

B7Y

1. Install main harness 12349881-3 circuit 366A plug on STOP LIGHT switch 366 jack.
2. Remove main harness 12345881 circuit 367 plug (1) from cable assembly 12349858 circuit 367 jack (2).
3. Is TRANS OIL LOW PRESS indicator still on?

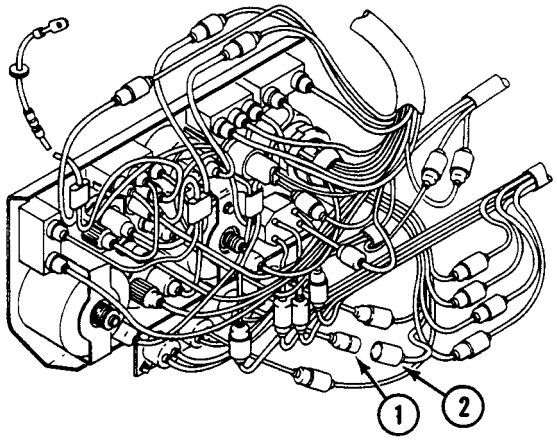

NO →

B7YN

1. Faulty main wiring harness 12349881-3 circuit 367. Beyond unit maintenance repair.
2. Notify supervisor.

YES ↓

B8Y

1. Install harness 12349881-3 circuit 367 plug on PARKING BRAKE switch circuit 366 jack.
2. Replace trans oil low press lens indicator assembly (WP 0212 00).
3. Verify no faults found.

CY

1. Remove TRANS OIL LOW PRESS lens, gasket, bulb, and gasket from indicator assembly.
2. Measure voltage between indicator assembly center contact and ground.
3. Does multimeter read 17 volts or more?

NO → GO TO **DY** (PAGE 0041 00-10)

YES

C2Y

1. Remove instrument panel special purpose cable assembly 12349858 circuit 367/27L plug (1) from TRANS OIL LOW PRESS indicator assembly jack (2).
2. Check continuity between instrument panel special cable assembly 12349858 circuit 367/27L plug (1), circuit 367 pin and ground.
3. Does multimeter read continuity?

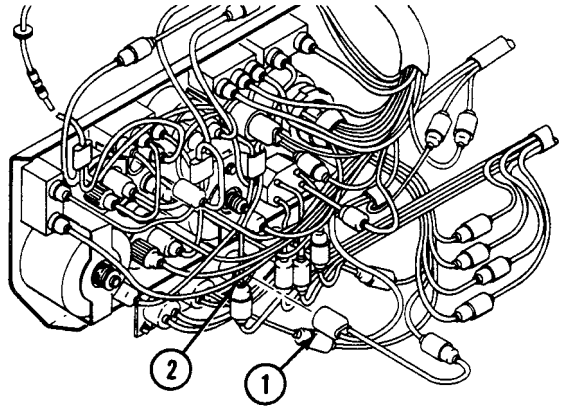

NO → **C2YN**

1. Remove jumper wire and install main wiring harness 12349881-3 circuit 366 plug on TRANS OIL LOW PRESS switch.
2. Replace TRANS OIL LOW PRESS indicator assembly (WP 0204 00).
3. Verify no faults found.

YES

C3Y

1. Remove main wiring harness 12349881-3 circuits 367 plug (1) and 366A plug (2) from PARKING BRAKE switch jacks (3) and (4).
2. Check continuity between PARKING BRAKE switch jacks (3) and (4).
3. Is there continuity?

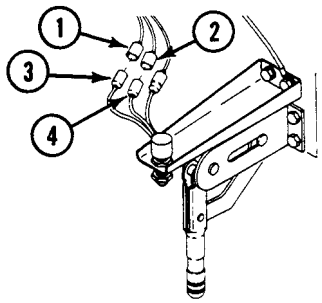

NO

C3YN

1. Install harness main wiring 12349881-3 circuit 367/27L plug on TRANS OIL LOW PRESS indicator.
2. Remove jumper wire and install main wiring harness 12349881-3 circuit 366 plug on TRANS OIL LOW PRESS switch.
3. Replace PARKING BRAKE switch (WP 0286 00).
4. Verify no faults found.

YES

C4Y

1. Remove main wiring harness 12349881-3 circuits 366 plug (1) and 366A plug (3) from STOP LIGHT switch circuit jacks 366A (2) and 366 (4).
2. Check continuity between switch circuit jacks 366A (2) and 366 (4).
3. Is there continuity?

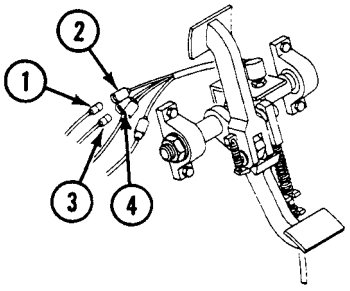

NO

C4YN

1. Remove jumper wire and install transmission wiring harness 12349810 circuit 366 plug.
2. Install main wiring harness 12349881-3 circuit 367/27L, 366A, and 367 plugs.
3. Replace STOP LIGHT switch (WP 0285 00).
4. Verify no faults found.

YES

C5Y

1. Check continuity between main wiring harness 12349881-3 circuit 366 plug pin at STOP LIGHT switch and ground.
2. Is there continuity?

NO

GO TO **EY** (PAGE 0041 00-11)

YES

C6Y

1. Remove jumper wire and install main wiring harness 12349881-3 circuit 366 plug on TRANS OIL LOW PRESS switch.
2. Check continuity between main wiring harness 12349881-3 circuit 366A plug at BRAKE switch and circuit 366A plug at PARKING BRAKE LIGHT switch.
3. Is there continuity?

NO →

C6YN

1. Faulty harness 12349881-3 circuit 366A. Beyond unit maintenance repair.
2. Notify supervisor.

YES ↓

C7Y

1. Check continuity between main wiring harness 12349881-3 circuit 367 plugs.
2. Is there continuity?

NO →

C7YN

1. Install harness 12349881-3 circuit 366 plugs.
2. Faulty harness 12349881-3 circuit 367. Beyond unit maintenance repair.
3. Notify supervisor.

YES ↓

C8Y

1. Install main wiring harness 12349881-3 circuit 367 plugs on switch and cable assembly 12345898.
2. Replace TRANS OIL LOW PRESS indicator assembly (TM 9-2350-366-20-1).
3. Verify no faults found.

DY

1. Remove jumper wire and install harness 12349881-3 on TRANS OIL LOW PRESS switch.
2. Remove instrument panel for access (WP 0220 00).
3. Remove instrument panel special purpose harness 12349858 circuit 367/27L plug (3) from TRANS OIL LOW PRESS indicator jack (4).
4. Check continuity between instrument panel special purpose harness 12349858 circuit 27 plug (1) and circuit 367/27L plug (3), circuit 27L pin.
5. Is there continuity?

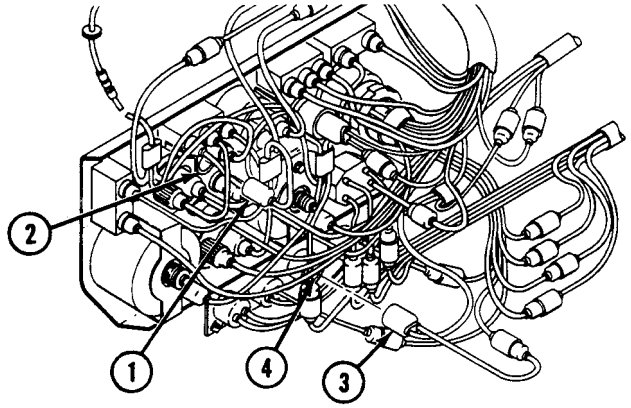

NO →

DYN

1. Install gasket, bulb, gasket, and cover lens on TRANS OIL LOW PRESS indicator assembly.
2. Replace cable instrument panel special purpose wiring harness 12349858 circuit 27L (WP 0215 00).
3. Verify no faults found.

YES ↓

D2Y

1. Install instrument panel special purpose cable 12349858 on circuit breaker.
2. Replace TRANS OIL LOW PRESS indicator (WP 0204 00).
3. Verify no faults found.

EY

1. Install harness 12349881-3 circuit 366A plugs on brake switches and 367/27L plug on indicator assembly.
2. Remove transmission controller harness 12349813 circuit 366 plug (1) from wiring harness 12349881-3 circuit 366 jack (2) behind instrument panel.
3. Check continuity between transmission controller harness 12349813 circuit 366 plug (1) and ground.
4. Is there continuity?

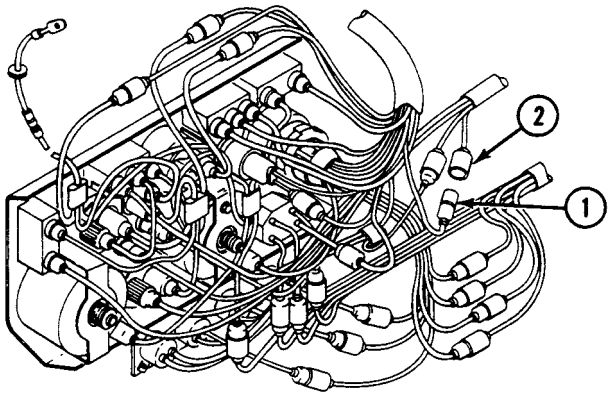

NO →

EYN

1. Remove jumper wire and install transmission wiring harness 12349810 on switch.
2. Faulty main wiring harness 12349881-3 circuit 366. Beyond unit maintenance repair.
3. Notify supervisor.

YES ↓

E2Y

1. Install main wiring harness 12349881-3 circuit 366 plug on STOPLIGHT switch circuit 366 jack.
2. Remove transmission wiring harness 12349810 plug (1) from harness 12349813 jack (2) at vehicle bulkhead.
3. Check continuity between transmission wiring harness 12349810 plug (1), pin K (3), and ground.
4. Is there continuity?

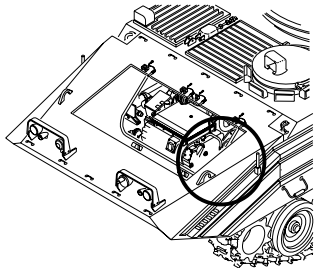

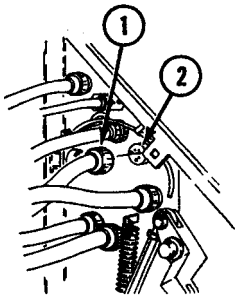

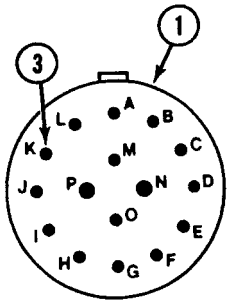

NO

E2YN

1. Install transmission controller harness 12349813 circuit 366 plug on main wiring harness 12349881-3 circuit 366 jack behind instrument panel.
2. Replace transmission wiring harness 12349810 circuit 366 (WP 0190 00).
3. Verify no faults found.

YES

E3Y

1. Remove jumper wire and install harness 12349810 circuit 366 plug on TRANS OIL LOW PRESS switch.
2. Replace transmission controller harness 12349813 circuit 366 (WP 0188 00).
3. Verify no faults found.

TRANS OIL HI TEMP INDICATOR MALFUNCTIONS 0042 00

INITIAL SETUP:

Maintenance Level
Unit

Tools and Special Tools
General mechanic's tool kit: automotive (WP 0397 00, Item 64)
Jumper wire
Multimeter (WP 0397 00, Item 30)

Personnel Required
Unit Mechanic 63T10
Helper (H)

References
TM 9-2350-366-10-1
TM 9-2350-366-10-2

Equipment Condition
Engine stopped (TM 9-2350-366-10-1)
Vehicle blocked (TM 9-2350-366-10-1)
Turret rotated to 3200 mils (TM 9-2350-366-10-2)
Power plant access panels removed (WP 0309 00)
Engine and transmission cooled down

T

1. Remove TRANS OIL HI TEMP indicator cover lens (1), gasket (2), bulb (3), and gasket (4).
2. Check continuity between bulb base (1) and bulb center contact.
3. Does multimeter read continuity?

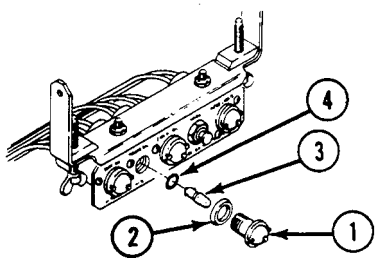

NO →

TN

1. Replace TRANS OIL HI TEMP indicator bulb (WP 0212 00).
2. Verify no faults found.

YES ↓

Y

1. Install TRANS OIL HI TEMP bulb, gaskets, and cover lens.
2. Remove hull wiring harness 12349873-1 circuit 327 plug (1) from TRANS OIL HI TEMP switch (2).
3. Turn MASTER SWITCH ON.
4. Is TRANS OIL HI TEMP indicator off?

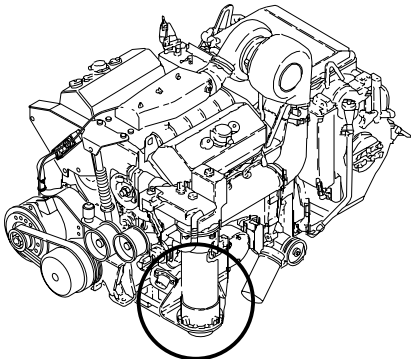

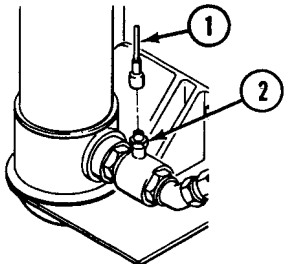

NO → GO TO **BY** (PAGE 0042 00-3)

YES

2Y

1. Install jumper wire between engine wiring harness 12349873 circuit 327 plug and ground.
2. Is TRANS OIL HI TEMP indicator on?

NO → GO TO **CY** (PAGE 0042 00-4)

YES

3Y

1. Remove jumper wire.
2. Replace TRANS OIL HI TEMP switch (WP 0206 00).
3. Verify no faults found.

BY

1. Remove engine wiring harness 12349873-1 plug (1) from main wiring harness 12349881-3 jack (2) at vehicle bulkhead.
2. Is TRANS OIL HI TEMP indicator still on?

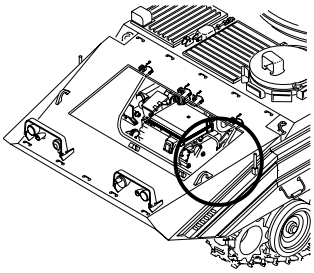

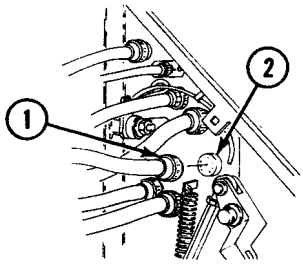

NO

BYN

1. Replace engine harness 12349873-1 (WP 0191 00).
2. Verify no faults found.

YES

B2Y

1. Turn MASTER SWITCH OFF.
2. Remove main wiring harness 12349881-3 circuit 337/27G plug (1) from TRANS OIL HI TEMP indicator (2).
3. Measure resistance between main wiring harness 12349881-3 circuit 327/27G plug (1), circuit 27 pin, and ground.
4. Does multimeter read 0 ohms?

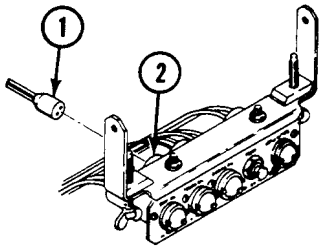

NO

B2YN

1. Replace TRANS OIL HI TEMP indicator assembly (WP 0212 00).
2. Verify no faults found.

YES

B3Y

1. Faulty main wiring harness 12349881-3 circuit 327. Beyond unit repair maintenance.
2. Notify supervisor.

CY

1. Remove TRANS OIL HI TEMP indicator cover lens, gasket, bulb, and gasket.
2. Measure voltage between center contact and ground.
3. Does multimeter read less than 17 volts?

NO → GO TO **DY** (PAGE 0042 00-6)

YES

C2Y

1. Remove jumper wire and install engine wiring harness 12349873-1 circuit 327 plug on TRANS OIL HI TEMP switch.
2. Remove main wiring harness 12349881-3 circuit 327/27G plug (1) from TRANS OIL HI TEMP indicator (2).
3. Measure voltage between main wiring harness 12349881-3 circuit 327/27G (1), circuit 27G pin, and ground.
4. Does multimeter read less than 17 volts?

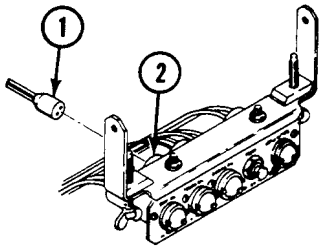

NO

C2YN

1. Replace TRANS OIL HI TEMP indicator assembly (WP 0206 00).
2. Verify no faults found.

YES

C3Y

1. Turn MASTER SWITCH OFF.
2. Remove instrument panel for access (WP 0220 00).
3. Remove main wiring harness 12349881-3 circuit 27F plug (1) from cable assembly 12349858 circuit 27F jack (2).
4. Measure resistance between main wiring harness 12349881-3 circuit 27F plug (1) and circuit 27G pin on circuit 327/27G plug.
5. Does multimeter read 0 ohms?

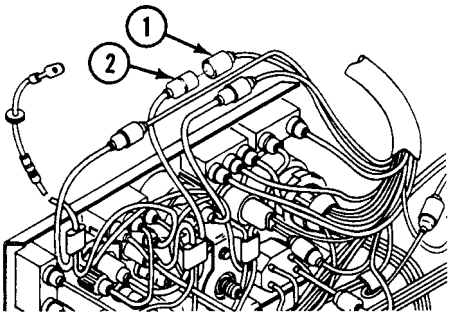

NO →

C3YN

1. Faulty main wiring harness 12349881-3 circuit 27G/27F. Beyond unit maintenance repair.
2. Notify supervisor.

YES ↓

C4Y

1. Install main wiring harness 12349881-3 circuit 327/27G plug on TRANS OIL HI TEMP indicator jack.
2. Repair instrument panel special purpose cable 12349858 circuit 27F (WP 0215 00).
3. Verify no faults found.

TRANS OIL HI TEMP INDICATOR MALFUNCTIONS—Continued **0042 00**

DY

1. Turn MASTER SWITCH OFF.
2. Remove instrument panel for access (WP 0220 00).
3. Remove main wiring harness 12349881-3 circuit 327/27G plug (1) from TRANS OIL HI TEMP assembly jack (2).
4. Measure resistance between main wiring harness 12349881-3 circuit 327/27G plug (1), circuit 327G pin and ground.
5. Does multimeter read more than 0 ohms?

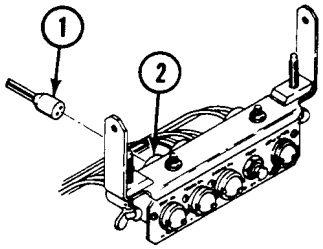

NO

DYN

1. Remove jumper wire and install engine wiring harness 12349873-1 plug on TRANS OIL HI TEMP switch.
2. Replace TRANS OIL HI TEMP indicator assembly (WP 0206 00).
3. Verify no faults found.

YES

D2Y

1. Install TRANS OIL HI TEMP bulb, gaskets, and cover lens.
2. Remove harness 12349873-1 plug (1) from main wiring harness 12349881-3 jack (2) at vehicle bulkhead.
3. Measure resistance between engine wiring harness 12349873-1 plug (1), pin G (3), and ground.
4. Does multimeter read more than 0 ohms?

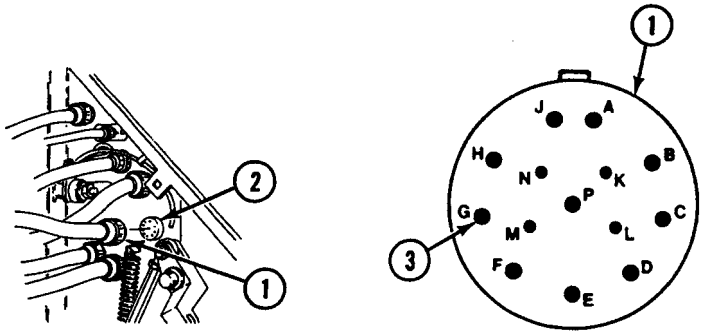

NO →

D2YN

1. Remove jumper wire and install engine wiring harness 12349873-1 circuit 327 plug on TRANS OIL HI TEMP switch.
2. Faulty main wiring harness 12349881-3 circuit 327. Beyond unit maintenance repair.
3. Notify supervisor.

YES ↓

D3Y

1. Install harness main wiring 12349881-3 circuit 327/27G plug on TRANS OIL HI TEMP switch.
2. Repair engine wiring harness 12349873-1 circuit 327 (WP 0191 00).
3. Verify no faults found.

ENGINE COOLANT LOW LEVEL INDICATOR MALFUNCTIONS 0043 00

INITIAL SETUP:

Maintenance Level

Unit

Tools and Special Tools

General mechanic's tool kit: automotive (WP 0397 00, Item 64)
Multimeter (WP 0397 00, Item 30)

Materials/Parts

Jumper Wire

Personnel Required

Unit Mechanic 63T10
Helper (H)

References

TM 9-2350-366-10-1

Equipment Condition

Engine stopped (TM 9-2350-366-10-1)
Vehicle blocked (TM 9-2350-366-10-1)
Power plant access panel removed (WP 0309 00)

T

1. Remove ENGINE COOLANT LOW LEVEL indicator cover (1), gasket (2), bulb (3), and gasket (4).
2. Check continuity between bulb center contact and bulb base.
3. Does multimeter indicate continuity?

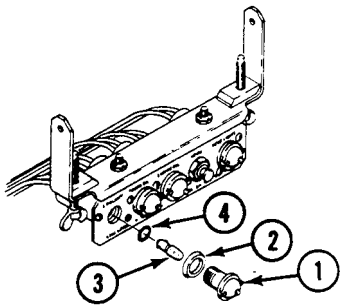

NO →

TN

1. Replace ENGINE COOLANT LOW LEVEL indicator bulb (WP 0212 00).
2. Verify no faults found.

YES ↓

ENGINE COOLANT LOW LEVEL INDICATOR MALFUNCTIONS—Continued 0043 00

Y

1. Install ENGINE COOLANT LOW LEVEL indicator cover, bulb, and gaskets.
2. Remove harness 12349873-1 plug (1) from coolant level detector jack (2).
3. Turn MASTER SWITCH to ON.
4. Is ENGINE COOLANT LOW LEVEL indicator off?

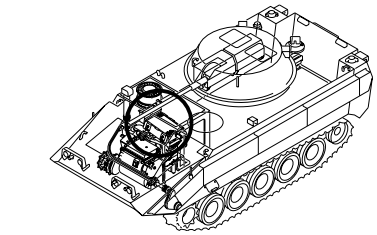

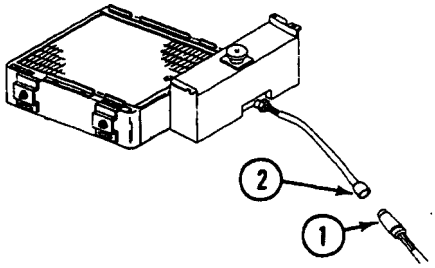

NO → GO TO **BY** (PAGE 0043 00-3)

YES

2Y

1. Install jumper wire between engine wiring harness 12349873-1 plug, pin B, and ground.
2. Is ENGINE COOLANT LOW LEVEL indicator on?

NO → GO TO **CY** (PAGE 0043 00-4)

YES

3Y

1. Remove jumper wire.
2. Measure voltage between engine wiring harness 12349873-1 plug, pin A, and ground.
3. Does multimeter read 17 volts or more?

NO → GO TO **DY** (PAGE 0043 00-5)

YES

4Y

1. Replace auxiliary tank fluid level detector (WP 0158 00).
2. Verify no faults found.

BY

1. Remove engine wiring harness 12349873-1 plug (1) from harness 12349881-3 jack (2) at vehicle bulkhead.
2. Is ENGINE COOLANT LOW LEVEL indicator still on?

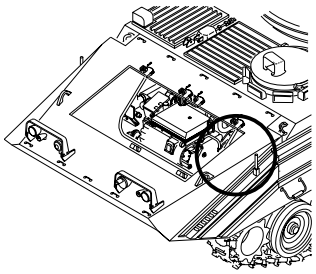

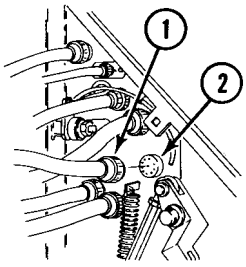

NO →

BYN

1. Shorted engine wiring harness 12349873-1. Beyond unit maintenance repair.
2. Notify supervisor.

YES ↓

B2Y

1. Turn MASTER SWITCH to OFF.
2. Remove main wiring harness 12349881-3 circuit 352/27K (1) from back side of ENGINE COOLANT LOW LEVEL indicator jack (2).
3. Measure resistance between main wiring harness 12349881-3 plug (1), circuit 352 pin, and ground.
4. Does multimeter read infinity?

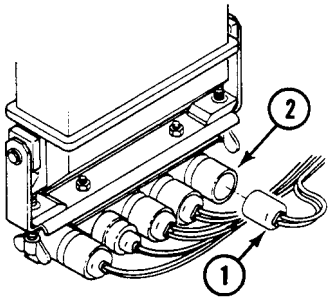

NO →

B2YN

1. Install engine wiring harness 12349873-1 plug on coolant level detector.
2. Shorted main wiring harness 12349881-3 circuit 352. Beyond unit maintenance repair.
3. Notify supervisor.

YES ↓

B3Y

1. Replace ENGINE COOLANT LOW LEVEL indicator assembly (WP 0212 00).
2. Verify no faults found.

CY

1. Remove main wiring harness 12349881-3 circuit 352/27K (1) from ENGINE COOLANT LOW LEVEL indicator (2).
2. Measure voltage between main wiring harness 12349881-3plug (1), circuit 27K pin, and ground.
3. Does multimeter read less than 17 volts?

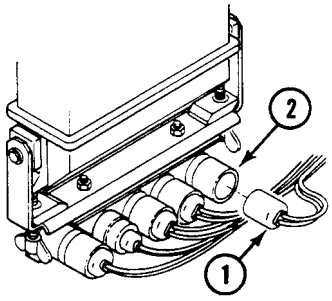

NO →

CYN

1. Remove jumper wire and install harness 12349873-1 plug on coolant level detector.
2. Replace ENGINE COOLANT LOW LEVEL indicator assembly (WP 0212 00).
3. Verify no faults found.

YES ↓

C2Y

1. Turn MASTER SWITCH to OFF.
2. Remove instrument panel for access. See task: Replace Instrument Panel Mounts and Ground Lead (WP 0211 00).
3. Remove main wiring harness 12349881-3 circuit 27F plug (1) from cable assembly 12349858 circuit 27F jack (2).
4. Measure resistance between harness 12349881-3 circuit 27K plug and circuit 27F plug (1).
5. Does multimeter read 0 ohms?

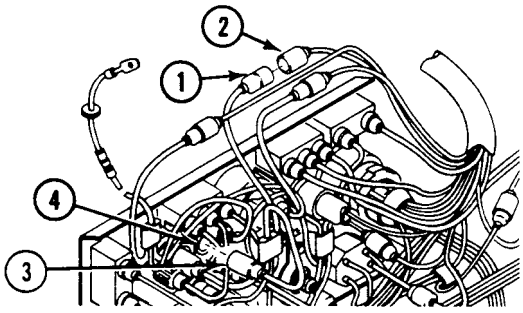

NO →

C2YN

1. Faulty main wiring harness 12349881-3 circuit 27K.
2. Notify supervisor.

YES ↓

C3Y

1. Install harness 12349881-3 circuit 352/27K plug on ENGINE COOLANT LOW LEVEL indicator.
2. Replace instrument panel special purpose cable assembly 12349858 circuit 27F (WP 0215 00).
3. Verify no faults found.

DY

1. Remove engine harness 1234873 plug (1) from main wiring harness 12349881-3 jack (2) at vehicle bulkhead.
2. Measure voltage between main wiring harness 12349881-3 jack (2), pin J (3), and ground.
3. Does multimeter read less than 17 volts?

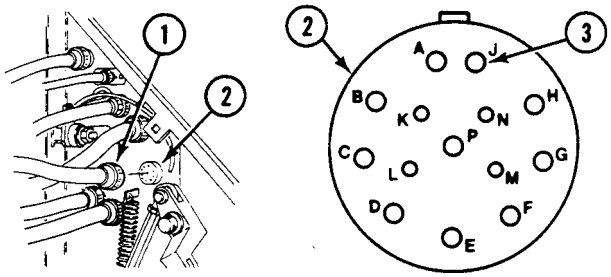

NO →

DYN

1. Replace engine wiring harness 12349873-1 circuit 27N (WP 0191 00).
2. Verify no faults found.

YES ↓

D2Y

1. Turn MASTER SWITCH to OFF.
2. Install engine wiring harness 12349873-1 plug on coolant level detector.
3. Remove instrument panel for access. See task: Replace Instrument Panel Mounts and Ground Lead (WP 0211 00).
4. Remove main wiring harness 12349881-3 circuit 27F plug (1) from cable assembly 12349858 circuit 27F jack (2).
5. Remove instrument panel special purpose cable assembly 12349858 circuit 27 plug (3) from instrument panel circuit breaker (4).
6. Measure resistance between instrument panel special purpose cable assembly 12349858 circuit 27 plug (3) and circuit 27F plug (1).
7. Does multimeter read 0 ohms?

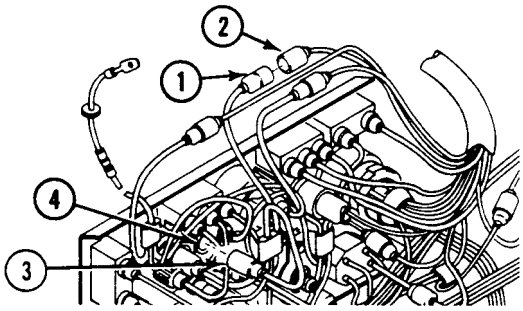

NO →

D2YN

1. Install engine wiring harness 12349873-1 plug on main wiring harness 12349881-3 jack on vehicle bulkhead.
2. Replace instrument panel special purpose cable assembly 12349858 circuit 27/27F (WP 0215 00).
3. Verify no faults found.

YES ↓

D3Y

1. Faulty harness 12349881-3 circuit 27N.
2. Notify supervisor.

TRANS FILTER CLOGGED INDICATOR MALFUNCTIONS 0044 00

INITIAL SETUP:

Maintenance Level
Unit

Tools and Special Tools
General mechanic's tool kit: automotive (WP 0397 00, Item 64)
Multimeter (WP 0397 00, Item 30)

Materials/Parts
Jumper wire

Personnel Required
Unit Mechanic 63T10

References
TM 9-2350-366-10-1

Equipment Condition
Engine stopped (TM 9-2350-366-10-1)
Vehicle blocked (TM 9-2350-366-10-1)
Front VISMOD access panel removed (WP 0307 00)
Power plant access panels removed (WP 0308 00)

T

1. Turn MASTER SWITCH to ON.
2. Is TRANS FILTER CLOGGED indicator off?

NO → GO TO **BY** (PAGE 0044 00-4)

YES

Y

1. Remove TRANS FILTER CLOGGED indicator cover lens (1), gasket (2), bulb (4), and gasket (3).
2. Check continuity between bulb base and bulb center contact.
3. Does multimeter indicate continuity?

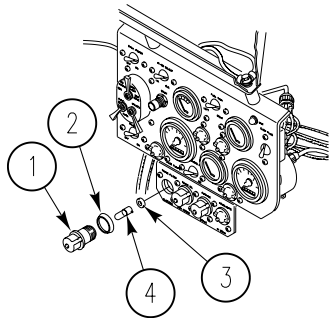

NO → **YN**

1. Replace TRANS FILTER CLOGGED bulb (WP 0212 00).
2. Verify no faults found.

YES

2Y

1. Measure voltage between indicator assembly center contact and ground.
2. Does multimeter read 17 volts or more?

NO → GO TO **CY** (PAGE 0044 00-6)

YES

TRANS FILTER CLOGGED INDICATOR MALFUNCTIONS—Continued 0044 00

3Y

1. Install TRANS FILTER CLOGGED indicator cover, lens, bulb, and gaskets.
2. Remove transmission wiring harness 12349810 plug (1) from pressure differential switch (2).
3. Install jumper wire between harness 12349810 plug (1), pin B, and ground.
4. Is TRANS FILTER CLOGGED indicator off?

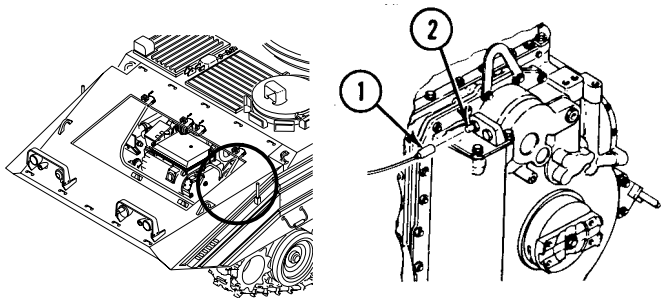

NO →

3YN

1. Turn MASTER SWITCH OFF.
2. Replace differential pressure switch (WP 0121 00).
3. Verify no faults found.

YES ↓

4Y

1. Turn MASTER SWITCH OFF.
2. Remove cable assembly 12349858 circuit 323/27R plug (1) from TRANS FILTER CLOGGED indicator jack (2).
3. Measure resistance between harness 12349858 circuit 323/27R plug (1), circuit 323 pin (3), and ground.
4. Does multimeter read more than 0 ohms?

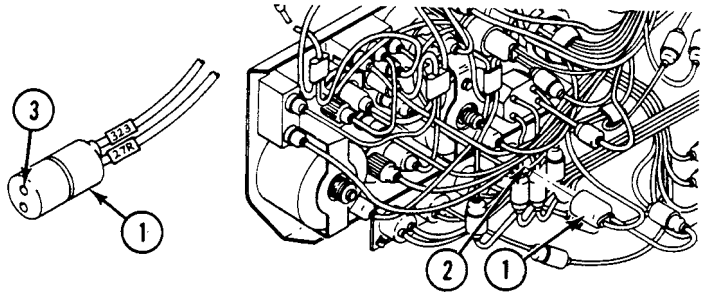

NO →

4YN

1. Remove jumper wire and install transmission wiring harness 12349810 plug on pressure differential switch jack.
2. Replace TRANS FILTER CLOGGED indicator assembly (WP 0269 00).
3. Verify no faults found.

YES ↓

5Y

1. Remove harness 12349813 circuit 323 plug (1) from cable assembly 12349858 circuit 323 jack (2).
2. Measure resistance between harness 12349813 circuit 323 plug pin (1), and ground.
3. Does multimeter read more than 0 ohms?

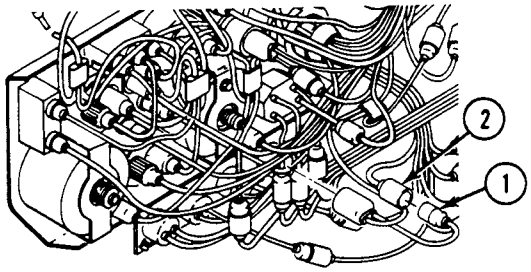

NO →

5YN

1. Remove jumper wire and install transmission controller harness 12349813 plug on pressure differential switch jack.
2. Replace instrumemt panel special cable assembly 12349858 circuit 323 (WP 0215 00).
3. Verify no faults found.

YES ↓

6Y

1. Remove transmission wiring harness 12349810 plug (1) from harness 12349813 jack (2) at vehicle bulkhead.
2. Measure resistance between harness 12349810 plug (1), pin J (3), and ground.
3. Does multimeter read 0 ohms?

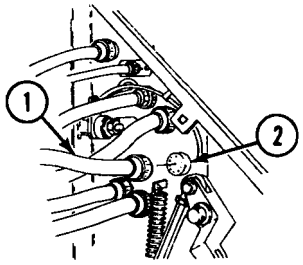

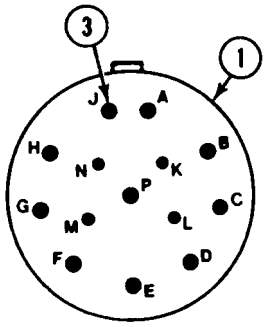

NO →

6YN

1. Install transmission controller harness 12349813 circuit 323/27R plug on TRANS FILTER CLOGGED indicator jack.
2. Install transmission controller harness 12349813 circuit 323 plug on cable assembly 12349858 circuit 323 jack.
3. Remove jumper wire and replace harness 12349810 circuit 323 (WP 0188 00).
4. Verify no faults found.

YES ↓

7Y

1. Remove jumper wire and install harness 12349810 plug on pressure differential switch.
2. Replacetransmitter controller wiring harness 12349813 circuit 323 (WP 0188 00).
3. Verify no faults found.

BY

1. Remove transmission wiring harness 12349810 plug (1) from pressure differential switch (2).
2. Is TRANS FILTER CLOGGED indicator still on?

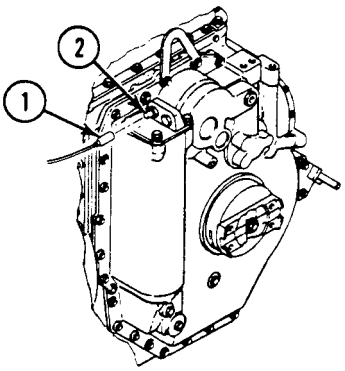

NO →

BYN

1. Turn MASTER SWITCH OFF.
2. Replace differential pressure switch (WP 0121 00).
3. Verify no faults found.

YES ↓

B2Y

1. Remove transmission wiring harness 12349810 plug (1) from harness 12349813 jack (2) at vehicle bulkhead.
2. Is TRANS FILTER CLOGGED indicator still on?

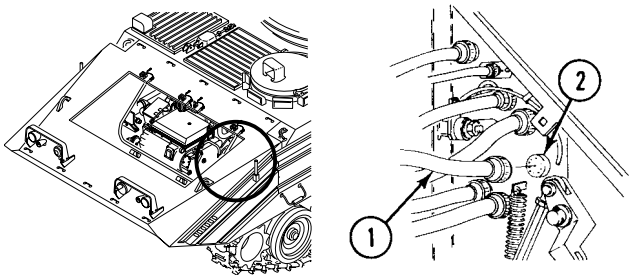

NO →

B2YN

1. Turn MASTER SWITCH OFF.
2. Replace transmission wiring harness 12349810 (WP 0188 00).
3. Verify no faults found.

YES ↓

B3Y

1. Install transmission harness 12349810 circuit 323 plug on pressure differential switch.
2. Remove transmission controller harness 12349813 circuit 323 plug (1) from cable assembly 12349858 circuit 323 jack (2) behind indicator assembly.
3. Is TRANS FILTER CLOGGED indicator still on?

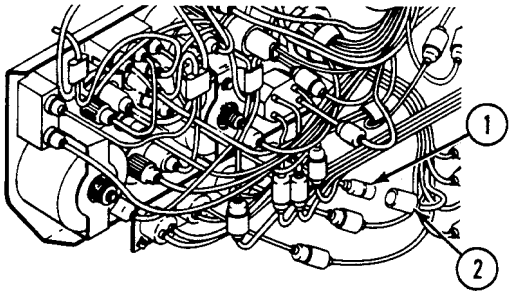

NO

B3YN

1. Turn MASTER SWITCH OFF.
2. Replace transmission wiring harness 12349813 (WP 0190 00).
3. Verify no faults found.

YES

B4Y

1. Turn MASTER SWITCH OFF.
2. Install transmittion harness 12349810 plug on transmission controller harness 12349813 jack at vehicle bulkhead.
3. Install harness 12349813 circuit 323 plug on cable assembly 12349858 circuit 323 jack behind instrument panel.
4. Replace TRANS FILTER CLOGGED indicator assembly (WP 0211 00).
5. Verify no faults found.

CY

1. Remove instrument panel for access. See task: Replace Instrument Panel Mounts and ground Lead (WP 0211 00).
2. Remove plug (1) from TRANS FILTER CLOGGED indicator jack (2).
3. Remove circuit 27 plug (3) from circuit breaker jack (4).
4. Measure resistance between TRANS FILTER CLOGGED indicator plug (1), circuit 27R pin (5), and circuit breaker plug (3), circuit 27 plug pin (3).
5. Does multimeter read 0 ohms?

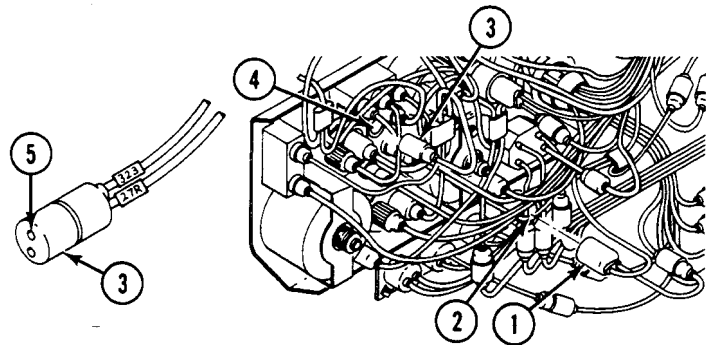

NO

CYN

1. Replace instrument panel special cable assembly 12349858 circuit 27R (WP 0215 00).
2. Verify no faults found.

YES

C2Y

1. Replace TRANS FILTER CLOGGED indicator assembly (WP 0269 00).
2. Verify no faults found.

INDICATORS SCHEMATIC

0045 00

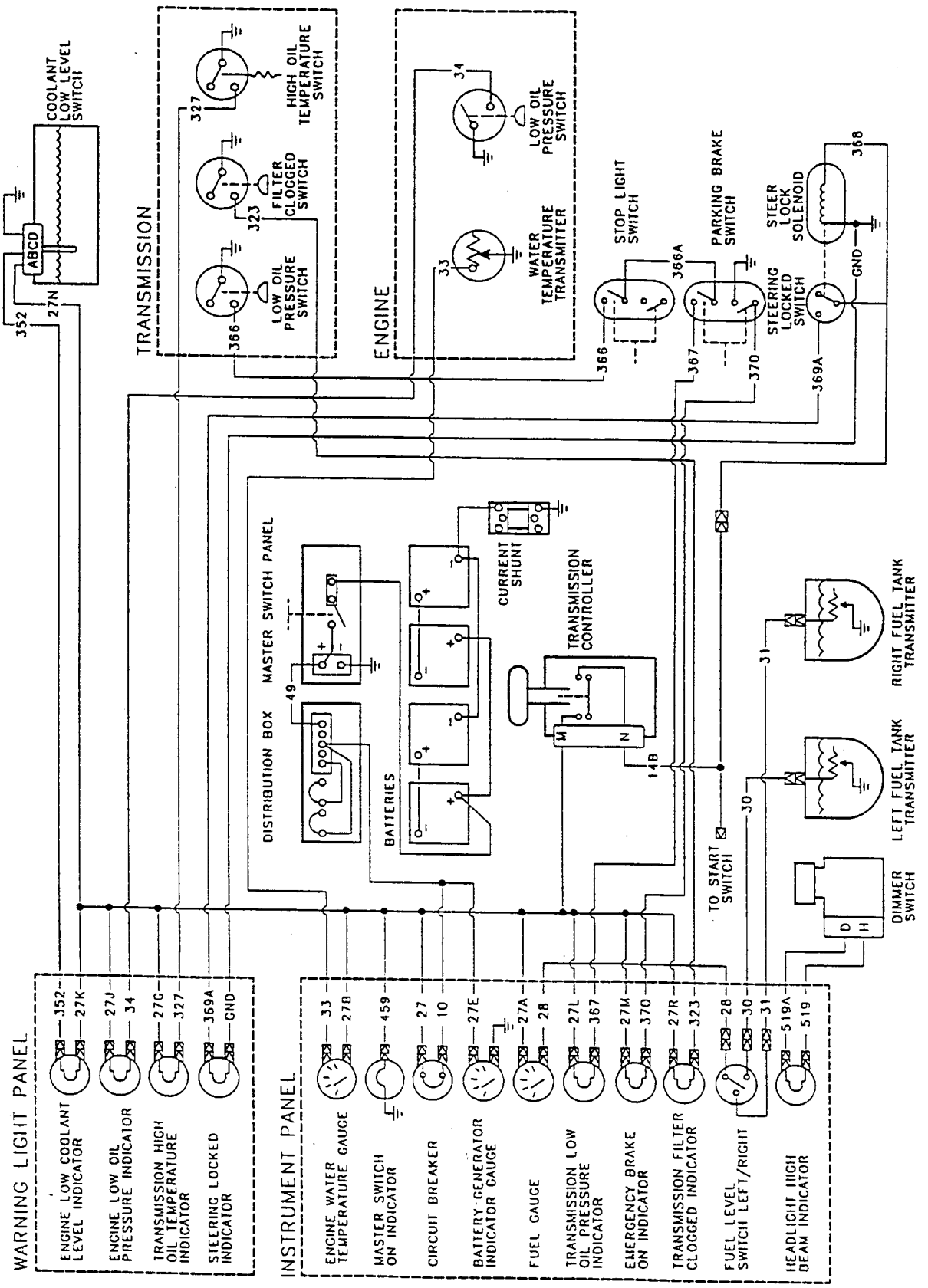

DRIVER'S VENTILATION FAN DOES NOT BLOW AIR 0046 00

INITIAL SETUP:

Maintenance Level

Unit

Tools and Special Tools

Unit mechanic's tool kit: automotive (WP 0397 00, Item 64)

Multimeter (WP 0397 00, Item 30)

Personnel Required

Unit Mech

References

TM 9-2350-366-10-1
TM 9-2350-366-10-2

Equipment Condition

Engine stopped (TM 9-2350-366-10-1)
Vehicle blocked (TM 9-2350-366-10-1)
MASTER POWER on (TM 9-2350-366-10-1)
Fan switch on (TM 9-2350-366-10-1)
Turret shutdown (TM 9-2350-366-10-2)

T

1. Verify ground wire is grounded to hull.
2. Is fan motor properly grounded?

NO → **TN**

1. Ensure fan has proper grounding and/or replace ground lead (WP 0189 00).
2. Verify no faults found.

YES ↓

Y

1. Disconnect lead 451A from driver's fan.
2. Measure voltage between lead 451A and ground. Use multimeter.
3. Is reading less than 16 volts?

NO → **YN**

1. Replace driver's vent fan (WP 0260 00).
2. Verify no faults found.

YES ↓

2Y

1. Disconnect lead 451A from fan switch.
2. Measure voltage between switch lead and ground. Use multimeter.
3. Is reading greater than 16 volts?

NO → **2YN**

1. Replace 451A lead (WP 0189 00).
2. Verify no faults found.

YES ↓

DRIVER'S VENTILATION FAN DOES NOT BLOW AIR—Continued **0046 00**

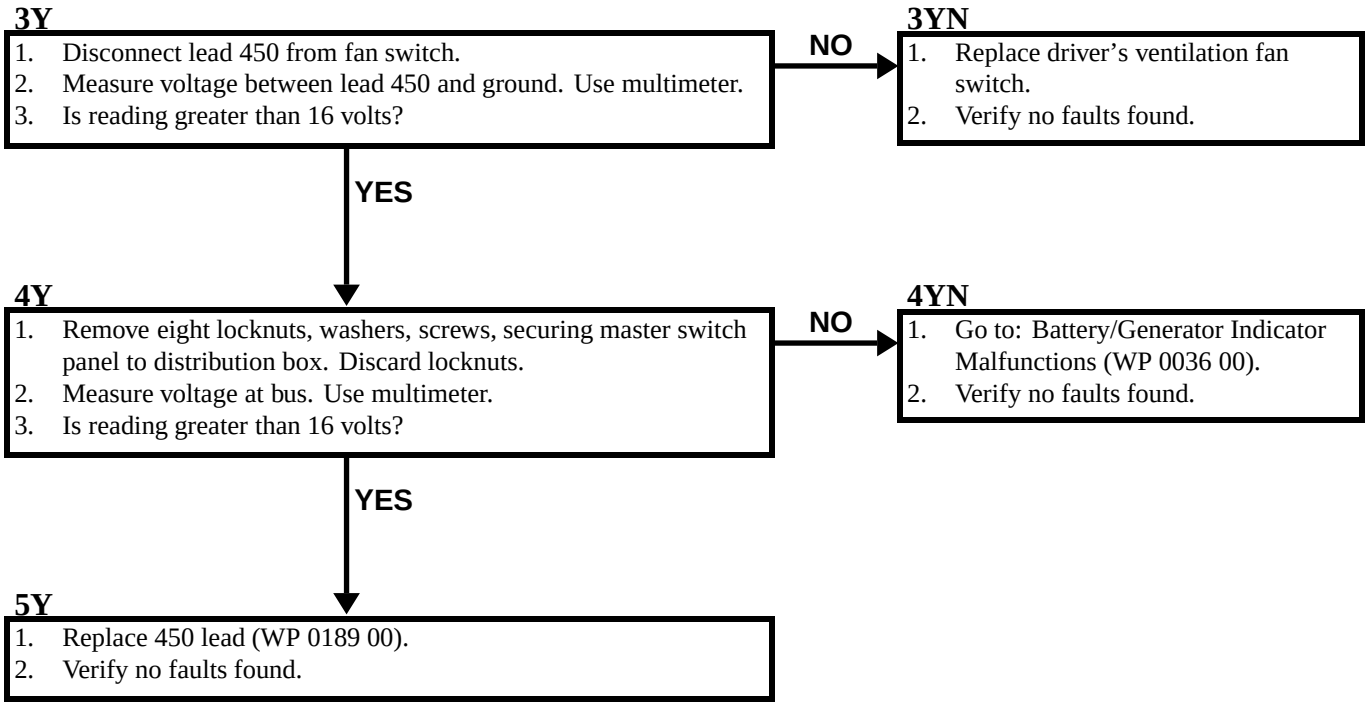

CREW VENTILATION FAN DOES NOT BLOW AIR 0047 00

INITIAL SETUP:

Maintenance Level

Unit

Tools and Special Tools

Unit mechanic's tool kit: automotive (WP 0397 00, Item 64)
Multimeter (WP 0397 00, Item 30)

Personnel Required

Unit Mech

References

TM 9-2350-366-10-1
TM 9-2350-366-10-2

Equipment Condition

Engine stopped (TM 9-2350-366-10-1)
Vehicle blocked (TM 9-2350-366-10-1)
MASTER POWER on (TM 9-2350-366-10-1)
Fan switch on (TM 9-2350-366-10-1)
Turret shutdown (TM 9-2350-366-10-2)

T

1. Verify fan is grounded to fan duct.
2. Is fan motor properly grounded?

NO → **TN**

1. Ensure fan has proper grounding.
2. Verify no faults found.

YES ↓

Y

1. Disconnect plug 59A from driver's fan.
2. Measure voltage between plug 59A and ground. Use multimeter.
3. Is reading less than 16 volts?

NO → **YN**

1. Replace driver's vent fan (WP 0260 00).
2. Verify no faults found.

YES ↓

2Y

1. Disconnect plug 59A from fan switch.
2. Measure voltage between switch and ground. Use multimeter.
3. Is reading greater than 16 volts?

NO → **2YN**

1. Replace 1W4 harness (WP 0187 00).
2. Verify no faults found.

YES ↓

3Y

1. Disconnect plug 59B from fan switch.
2. Measure voltage between fan switch and ground. Use multimeter.
3. Is reading greater than 16 volts?

NO → **3YN**

1. Replace crew ventilation fan switch (WP 0251 00).
2. Verify no faults found.

YES ↓

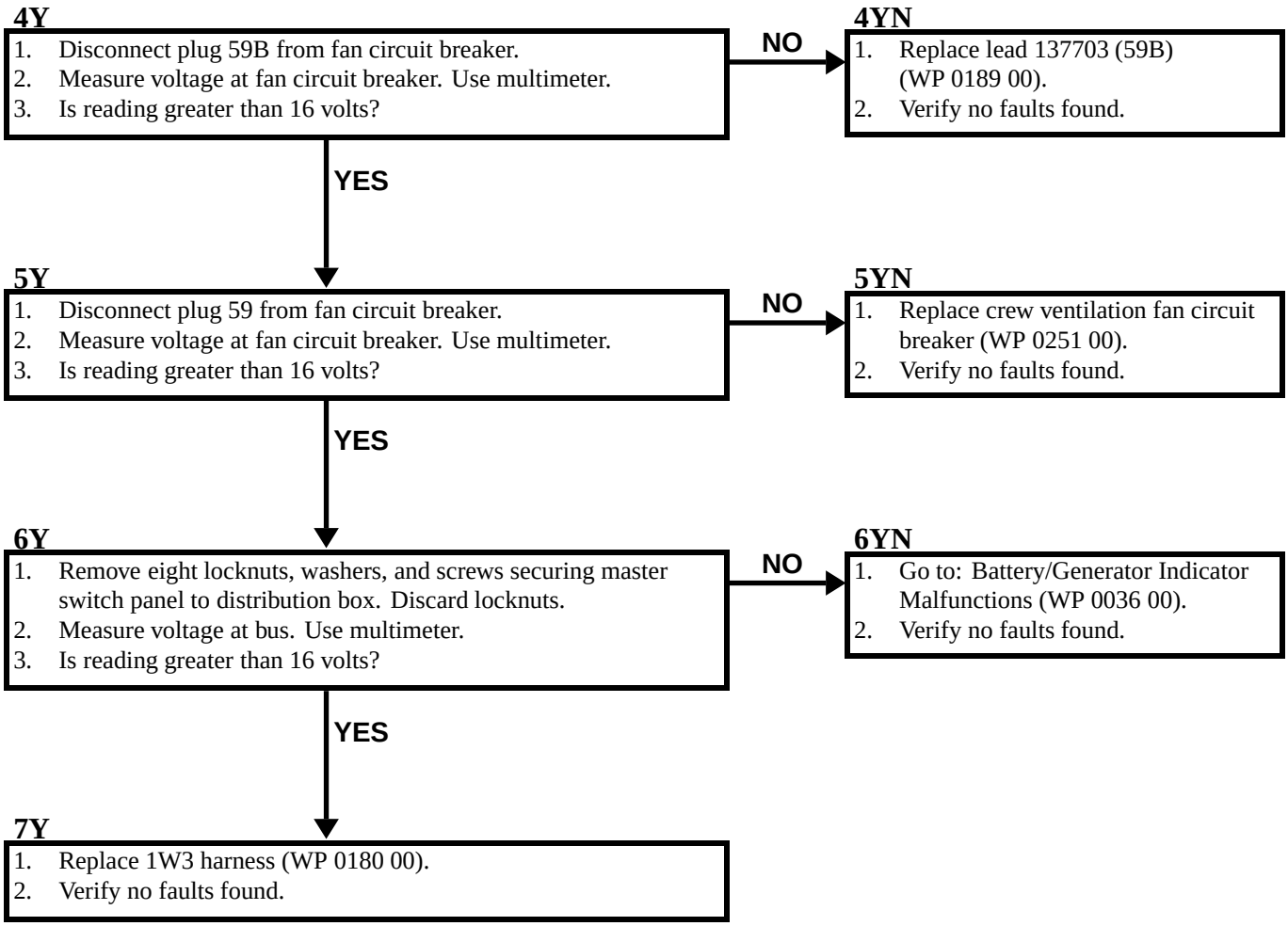
4Y
1. Disconnect plug 59B from fan circuit breaker.
2. Measure voltage at fan circuit breaker. Use multimeter.
3. Is reading greater than 16 volts?
NO
4YN
1. Replace lead 137703 (59B) (WP 0189 00).
2. Verify no faults found.
YES
5Y
1. Disconnect plug 59 from fan circuit breaker.
2. Measure voltage at fan circuit breaker. Use multimeter.
3. Is reading greater than 16 volts?
NO
5YN
1. Replace crew ventilation fan circuit breaker (WP 0251 00).
2. Verify no faults found.
YES
6Y
1. Remove eight locknuts, washers, and screws securing master switch panel to distribution box. Discard locknuts.
2. Measure voltage at bus. Use multimeter.
3. Is reading greater than 16 volts?
NO
6YN
1. Go to: Battery/Generator Indicator Malfunctions (WP 0036 00).
2. Verify no faults found.
YES
7Y
1. Replace 1W3 harness (WP 0180 00).
2. Verify no faults found.

VENTILATION FAN SCHEMATIC 0048 00

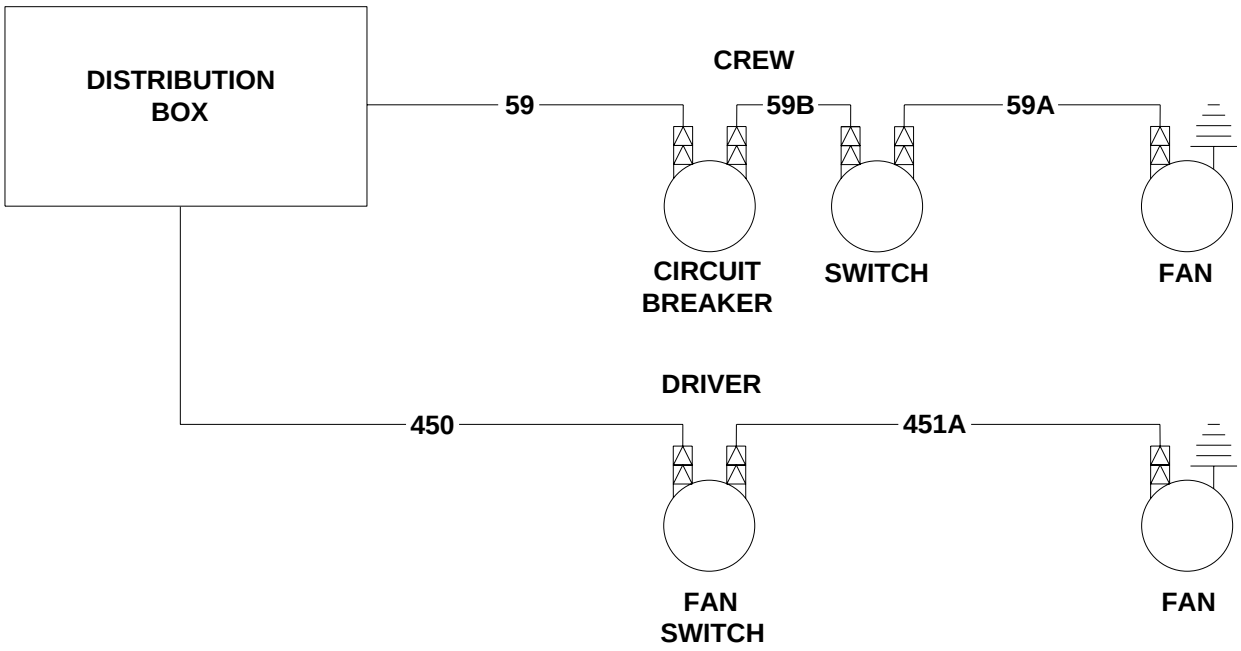

VEHICLE MOVES WITH TRANSMISSION IN SL 0049 00

INITIAL SETUP:

Maintenance Level
Unit

Tools and Special Tools
Unit Mechanic's Tool Kit: Automotive (WP 0397 00, Item 64)
Multimeter (WP 0397 00, Item 30)
Electrical Connector Pliers (WP 0397 00, Item 63)

Personnel Required
Unit Mechanic 63T10
Helper (H)

References
TM 9-2350-366-10-1

Equipment Condition
Engine stopped (TM 9-2350-366-10-1)
Vehicle blocked (TM 9-2350-366-10-1)
Front VISMOD panels removed (WP 0307 00)
Engine access panels removed (WP 0308 00)
Transmission in SL position

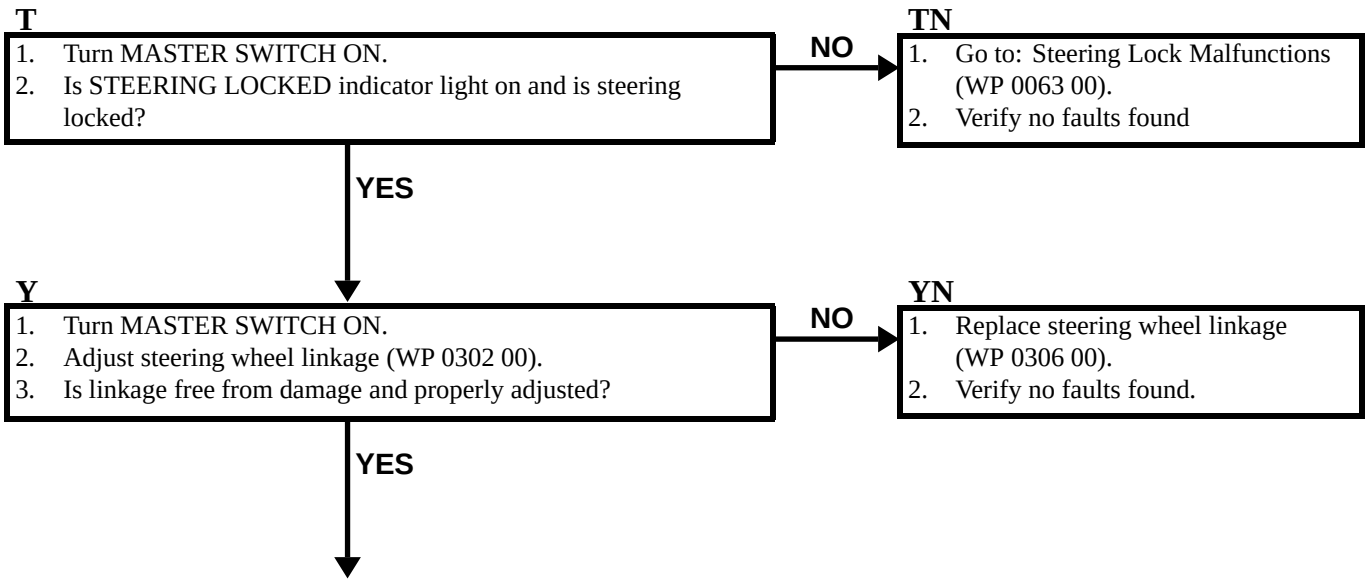

2Y

1. Remove harness 12349810 plug (1) from transmission jack (2).
2. Turn MASTER SWITCH ON.
3. Measure voltage between each socket on transmission wiring harness 12349810 plug (1) and ground. Multimeter should read 18 volts or more at sockets B (3), D (4), and E (5), and 0 volts for all remaining socket checks.
4. Does multimeter read less than 18 volts for sockets B, D, and E, and does not read 0 volts at all remaining sockets?

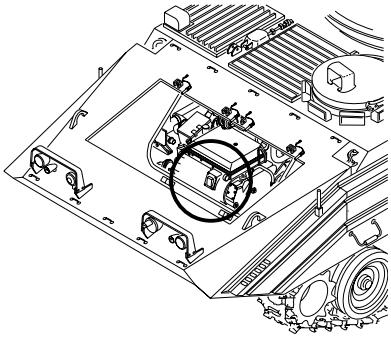

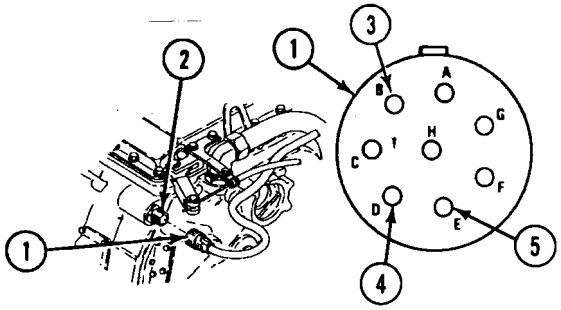

NO

2YN

1. Faulty transmission. Beyond unit maintenance repair.
2. Report problem to supervisor.

YES

3Y

1. Remove harness 12349810 plug (1) from harness 12349813 jack (2) at vehicle bulkhead.
2. Measure voltage between each socket on harness 12349813 jack (2) and ground. Multimeter should read 18 volts or more for sockets B (3), D (4), and E (5), and 0 volts for the remaining socket checks.
3. Does multimeter read less than 18 volts for sockets B, D, and E, and does not read 0 volts for all remaining sockets?

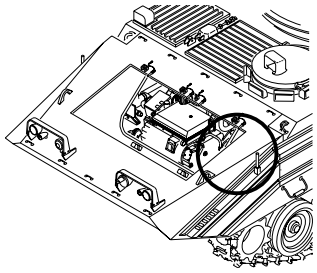

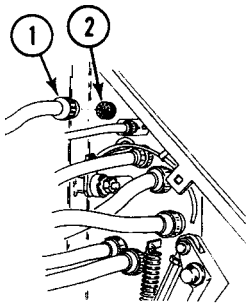

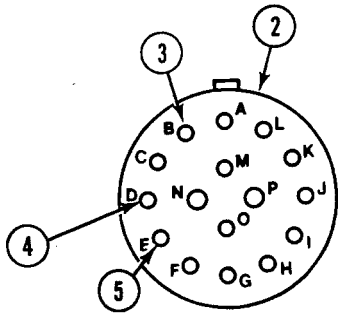

NO →

3YN

1. Faulty transmission wiring harness 12349810.
2. Report problem to supervisor.

YES ↓

4Y

1. Turn MASTER SWITCH OFF.
2. Install harness 12349810 plug on transmission jack.
3. Remove transmission controller (WP 0266 00).
4. Measure resistance between transmission controller jack (1), pin M (2), and pins A through G.
5. Does multimeter read more than 0 ohms for pins B, D, and E, and less than infinity for all remaining pins?

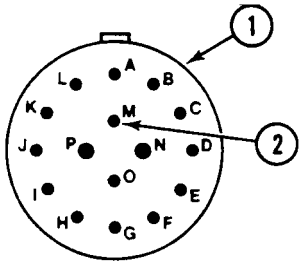

NO

4YN

1. Install transmission controller (WP 0266 00).
2. Faulty transmission controller wiring harness 12349813.
3. Report problem to supervisor.

YES

5Y

1. Install transmission wiring harness 12349810 plug on transmission controller wiring harness 12349813 jack at vehicle bulkhead.
2. Replace faulty transmission controller (WP 0266 00).
3. Verify no faults found.

VEHICLE DOES NOT MOVE IN ANY SHIFT LEVER POSITION 0050 00

INITIAL SETUP:

Maintenance Level
Unit

Tools and Special Tools
Unit mechanic's tool kit: automotive (WP 0397 00, Item 64)
Multimeter (WP 0397 00, Item 30)
Electrical Connector Pliers (WP 0397 00, Item 63)

Personnel Required
Unit Mech

References
TM 9-2350-366-10-1

Equipment Condition
Engine stopped (TM 9-2350-366-10-1)
Vehicle blocked (TM 9-2350-366-10-1)
Front VISMOD panels removed (WP 0307 00)
Power plant access panels removed (WP 0308 00)
Transmission oil level normal (TM 9-2350-366-10-1)

T

1. Remove harness 12349810 plug (1) from transmission jack (2).
2. Pull TOW START cable and LOCK ON (TM 9-2350-366-10).
3. Start engine (TM 9-2350-366-10).
4. Release TOW START cable.
5. Release parking brake.
6. Apply throttle.

WARNING

Vehicle may move forward. Personnel may be injured or killed. Keep personnel away from front of vehicle.

7. Does vehicle move forward?

NO → GO TO **BY** (PAGE 0050 00-6)

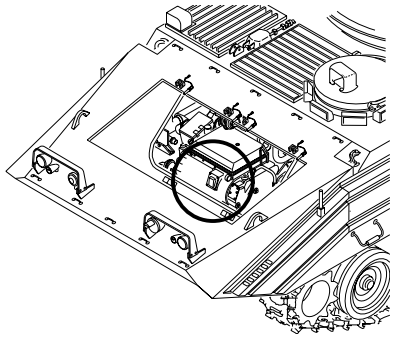

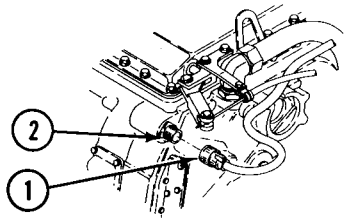

YES

VEHICLE DOES NOT MOVE IN ANY SHIFT LEVER POSITION—Continued 0050 00

Y

1. Stop engine (TM 9-2350-366-10).
2. Place trans controller in 1-4 position.
3. Turn MASTER SWITCH ON.
4. Measure voltage between each socket on harness 12349810 plug (1) and ground.
5. Does multimeter read less than 18 volts at sockets A (2) and C (3) or more than 0 volts at all remaining sockets?

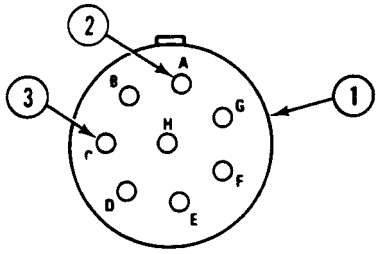

NO

YN

1. Faulty transmission. Beyond unit maintenance repair.
2. Report problem to supervisor.

YES

2Y

1. Turn MASTER SWITCH OFF.
2. Remove transmission harness 12349810 plug (1) from transmission controller harness 12349813 jack (2) at vehicle bulkhead.
3. Turn MASTER SWITCH ON.
4. Measure voltage between each socket on harness 12349813 jack (2) and ground.
5. Does multimeter read more than 18 volts at sockets A (3) and C (4) or less than 0 volts at all remaining sockets?

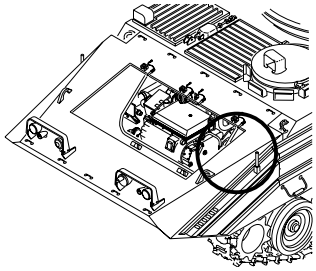

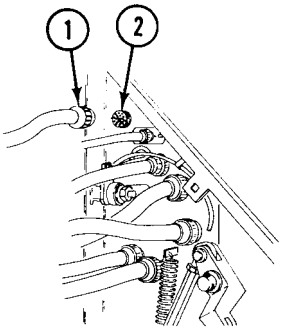

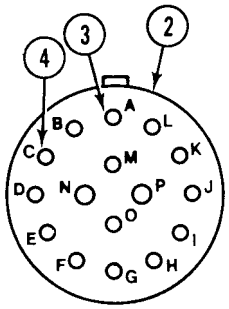

NO →

2YN

1. Faulty transmission wiring harness 12349810.
2. Report problem to supervisor.

YES ↓

3Y

1. Turn MASTER SWITCH OFF.
2. Remove transmission controller (WP 0266 00).
3. Measure resistance between transmission controller jack (1), pin M (2), and pins A (3) thru G.
4. Does multimeter read more than 0 ohms for pins A (3) and C (4), and less than infinity for all remaining pins?

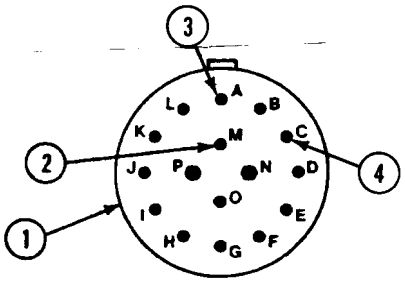

NO

3YN

1. Install transmission controller (WP 0266 00).
2. Faulty transmission wiring harness 12349813.
3. Report problem to supervisor.

YES

4Y

1. Install transmission wiring harness 12349810 plug on transmission controller harness 12349813 jack at vehicle bulkhead.
2. Replace faulty transmission controller (WP 0266 00).
3. Verify no faults found.

VEHICLE DOES NOT MOVE IN ANY SHIFT LEVER POSITION—Continued 0050 00

BY

1. Stop engine TM 9-2350-366-10-1.
2. Check brake linkage (WP 0278 00) and brake adjustment (WP 0280 00).
3. Is brake linkage free from damage and are brakes properly adjusted?

NO → **BYN**

1. Repair linkage (WP 0282 00) and/or adjust brakes (WP 0277 00).
2. Verify no faults found.

YES ↓

B2Y

1. Disconnect track TM 9-2350-366-10-1.
2. Disconnect propeller shaft (WP 0276 00).
3. Does final drive/sprocket turn?

NO → **B2YN**

1. Replace faulty final drive (WP 0274 00).
2. Verify no faults found.

YES ↓

B3Y

1. Faulty transmission beyond unit maintenance repair.
2. Verify no faults found.

VEHICLE DRIFTS OR DOES NOT STEER 0051 00

INITIAL SETUP:

Maintenance Level
Unit

Tools and Special Tools
General mechanic's tool kit: automotive (WP 0397 00, Item 64)

Personnel Required
Unit Mechanic 63T10
Helper (H)

References
TM 9-2350-366-10-1

Equipment Condition
Engine stopped (TM 9-2350-366-10-1)
Vehicle blocked (TM 9-2350-366-10-1)
Front VISMOD access panel removed (WP 0307 00)
Power plant access panels removed (WP 0308 00)

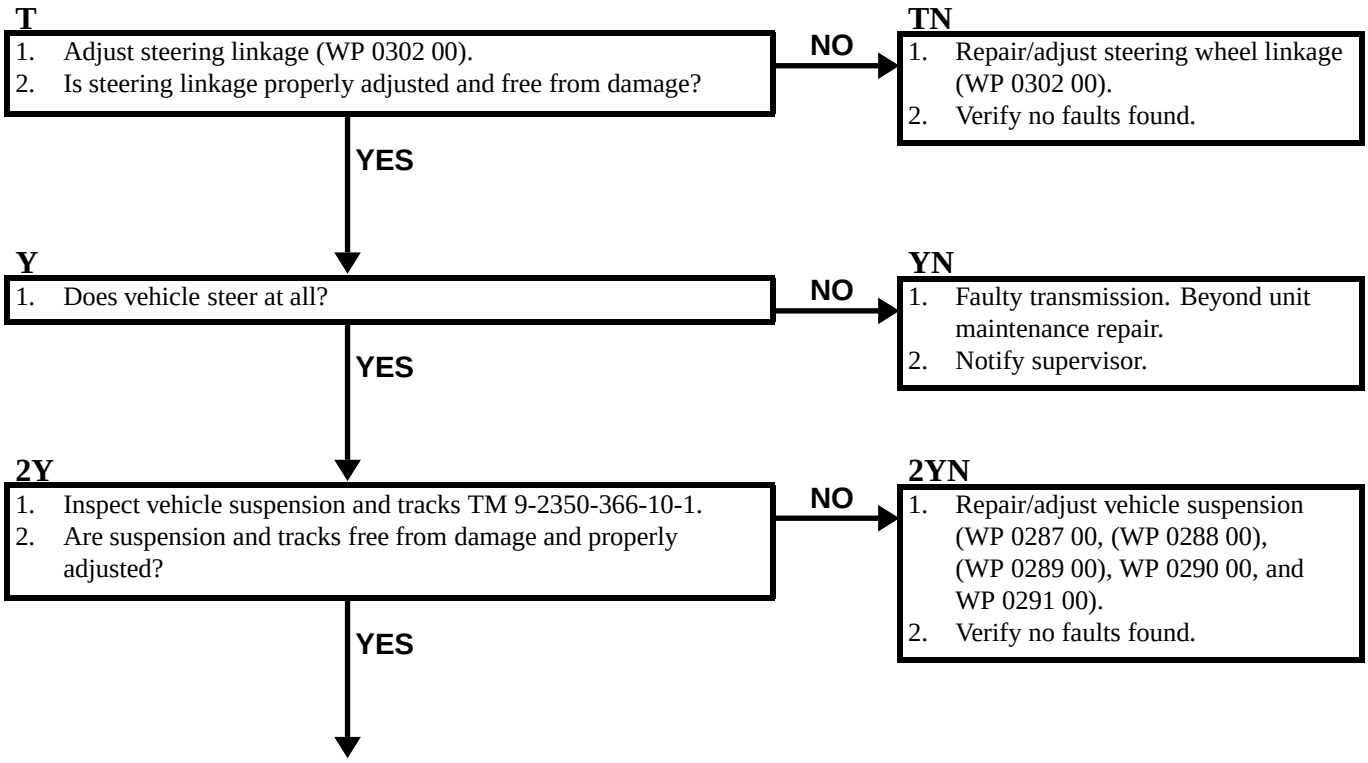

3Y

1. Check operation of service brake linkage (1) between brake pedal (2) and transmission (3).
2. Is linkage free from obstruction, binding, and damage?

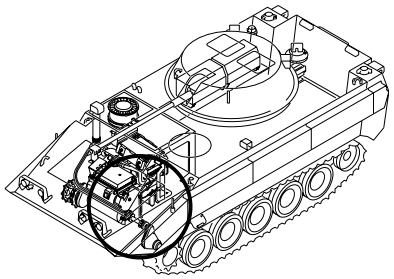

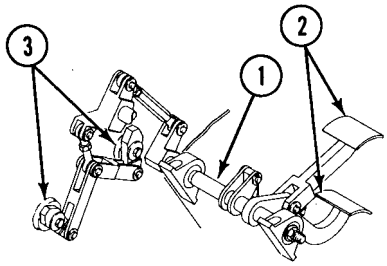

NO →

3YN

1. Replace/adjust service brakes control linkage (WP 0278 00).
2. Verify no faults found.

YES ↓

4Y

1. Has steering been adjusted?

NO →

4YN

1. Adjust steering (WP 0267 00).
2. Verify no faults found.

YES ↓

5Y

1. Check transmission brake adjustment (WP 0279 00).
2. Did brakes require adjustment?

NO →

5YN

1. Faulty transmission brakes. Beyond unit maintenance repair.
2. Notify supervisor.

YES ↓

6Y

1. Adjust service brake control linkage (WP 0278 00).
2. Verify no faults found.

SERVICE AND/OR PARKING BRAKE WILL NOT HOLD VEHICLE 0052 00

INITIAL SETUP:

Maintenance Level
Unit

Tools and Special Tools
General Mechanics Tool Kit: Automotive (WP 0397 00, Item 64)

Personnel Required
Unit Mechanic 63T10

References
TM 9-2350-366-10-1

Equipment Condition
Engine stopped (TM 9-2350-366-10-1)
Vehicle blocked (TM 9-2350-366-10-1)
Front VISMOD access panels removed (WP 0307 00)
Power plant access panel removed (WP 0308 00)

T

1. Start engine TM 9-2350-366-10-1.
2. Release parking brake.
3. Fully depress service brake pedal.
4. Shift transmission selector to 1-4 position.

WARNING

Vehicle may move forward. Personnel may be injured or killed. Keep personnel away from front of vehicle.

5. Depress accelerator fully or until vehicle begins to move.
6. Release accelerator and stop engine.
7. Did vehicle move forward?

NO →

TN

1. Adjust parking brake (WP 0277 00).
2. Verify no faults found.

YES ↓

Y

1. Check operation of service brake linkage (1) between brake pedal (2) and transmission (3).
2. Is linkage free from obstruction, binding, and damage?

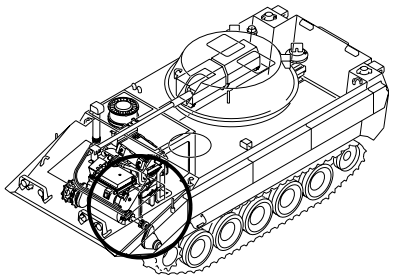

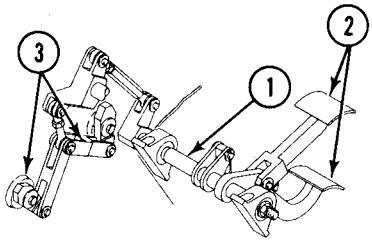

NO

YN

1. Replace/adjust service brakes control linkage (WP 0278 00).
2. Verify no faults found.

YES

2Y

1. Check transmission brake adjustment (WP 0279 00).
2. Did brakes require adjustment?

NO

2YN

1. Faulty transmission brakes. Beyond unit maintenance repair.
2. Notify supervisor.

YES

3Y

1. Check service brake control linkage adjustment (WP 0278 00).
2. Is service brake linkage properly adjusted?

NO

3YN

1. Adjust service brake control linkage (WP 0278 00).
2. Verify no faults found.

YES

4Y

1. Verify no faults found.

TRANSMISSION WILL NOT UPSHIFT OR SHIFTS ERRATICALLY IN 1-4 POSITION 0053 00

INITIAL SETUP:

Maintenance Level

Unit

Tools and Special Tools

General Mechanic's Tool Kit: Automotive (WP 0397 00, Item 64)
STE/ICE Test Set

Personnel Required

Unit Mechanic 63T10

References

TM 9-2350-366-10-1
TM 9-2350-366-10-2
TM 9-4910-571-12&P

Equipment Condition

Engine stopped (TM 9-2350-366-10-1)
Vehicle blocked (TM 9-2350-366-10-1)
Power plant access panel removed (WP 0308 00)
Power plant rear upper access panel removed (WP 0308 00)
Front VISMOD access panels removed (WP 0307 00)
Transmission in SL (TM 9-2350-366-10-1)
Rotate turret to gain access to power plant rear access panel (TM 9-2350-366-10-2)

T

1. Measure distance between center of throttle linkage pin (1) and bulkhead.
2. Is center of pin between 1 1/16 inch (27 mm) and 1 1/8 inch (28.5 mm) from bulkhead?

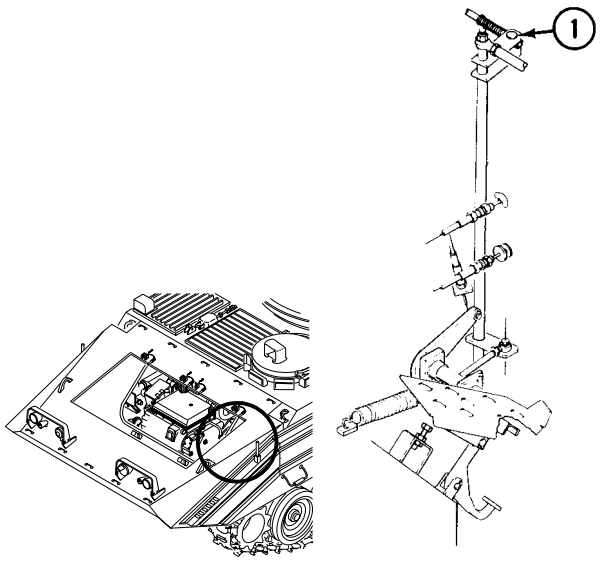

NO

TN

1. Adjust accelerator linkage. See TM 9-2350-366-34-1.
2. Verify no faults found.

YES

TRANSMISSION WILL NOT UPSHIFT OR SHIFTS ERRATICALLY IN 1-4 POSITION—Continued **0053 00**

Y

1. Adjust throttle valve modulator. See TM 9-2350-366-34-1.
2. Can throttle valve modulator be adjusted?

NO

YN

1. Replace throttle valve modulator and lever. See TM 9-2350-366-34-1.
2. Verify no faults found.

YES

2Y

1. Remove plug (1) from GOVERNOR TWO (G2) pressure port (2).
2. Install STE/ICE 11669236 hose (3) into G2 pressure port (2).
3. Install STE/ICE 444012 adapter (4) onto 11669236 hose (3).
4. Install STE/ICE 12258876 pressure transducer (5) onto 444012 adapter (4).
5. Hook up STE/ICE W4 cable (6) to transducer (5).
6. Route STE/ICE W4 cable (6) around left side of transmission, over engine, and thru power plant rear access opening (7), as shown.
7. Install rear upper access panel (WP 0309 00), allowing W4 cable slack to reach VTM.
8. Close front power plant access door (WP 0308 00).
9. Hook up VTM to DCA 6.
10. Hook up STE/ICE W4 cable (6) to VTM jack J2TK.
11. Perform STE/ICE Test 50 TM 9-4910-571-12&P with vehicle traveling over flat, level terrain at 30 MPH and transmission selector in 1-4 position.
12. Does VTM read between 92 and 107 psi?

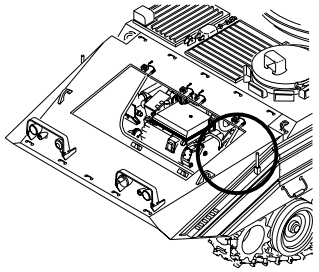

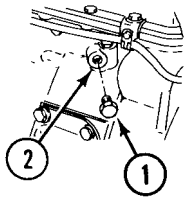

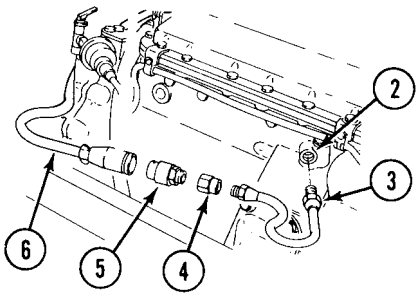

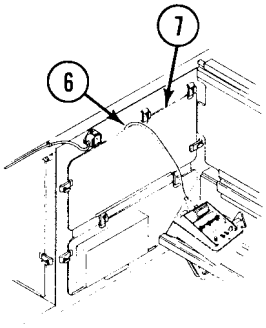

NO

2YN

1. Replace governor assembly (WP 0137 00).
2. Verify no faults found.

YES

TRANSMISSION WILL NOT UPSHIFT OR SHIFTS ERRATICALLY IN 1-4 POSITION—Continued **0053 00**

3Y

1. G2 pressure is OK.
2. Faulty transmission. Beyond unit maintenance repair.
3. Notify supervisor.

TRANSMISSION DOES NOT DOWNSHIFT IN 1-4 POSITION 0054 00

INITIAL SETUP:

Maintenance Level
Unit

Tools and Special Tools
General Mechanic's Tool Kit: Automotive (WP 0397 00, Item 64)
Pressure Gauge Kit (WP 0397 00, Item 35)

Personnel Required
Unit Mechanic 63T10

References
TM 9-2350-366-10-1
TM 9-2350-366-10-2

Equipment Condition
Engine stopped (TM 9-2350-366-10-1)
Vehicle blocked (TM 9-2350-366-10-1)
Engine access panel removed (WP 0308 00)
Driver's power plant access panel removed (WP 0312 00)
Power plant rear upper access panel removed (WP 0309 00)
Transmission in SL (TM 9-2350-366-10-1)
Rotate turret to gain access to power plant rear access panel (TM 9-2350-366-10-2)

T

NOTE

Pressure tester must read 4 psi. Any other reading indicates a fault.

1. Remove plug (1) from GOVERNOR TWO (G2) pressure port (2).
2. Install 1/16 inch pressure tester adapter in G2 port (2).
3. Install pressure tester on pressure tester adapter.
4. Start engine and let idle. See TM 9-2350-366-10-1.
5. Does pressure tester read more than 4 psi?

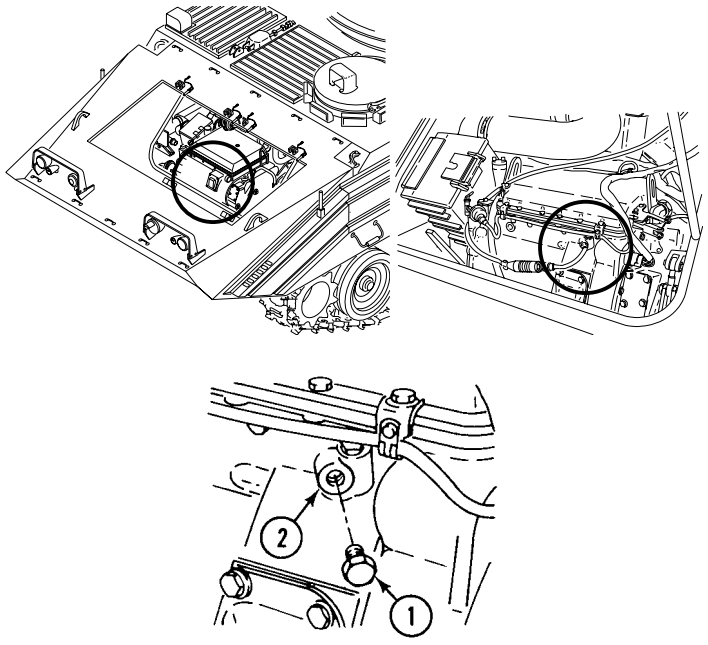

NO → **TN**

1. Faulty transmission. Beyond unit maintenance repair.
2. Notify supervisor.

YES

TRANSMISSION DOES NOT DOWNSHIFT IN 1-4 POSITION—Continued **0054 00**

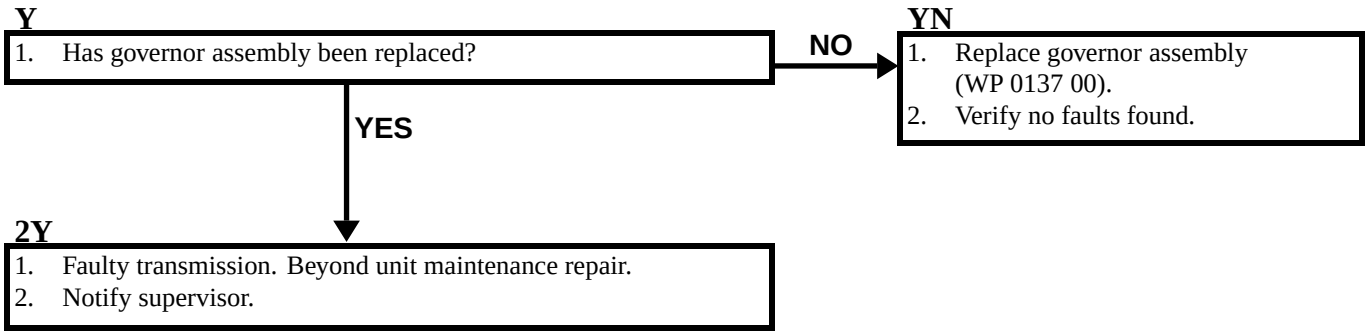

TRANSMISSION DOES NOT HOLD 1ST POSITION 0055 00

INITIAL SETUP:

Maintenance Level
Unit

Tools and Special Tools
General Mechanic's Tool Kit: Automotive (WP 0397 00, Item 64)
Multimeter (WP 0397 00, Item 30)
Electrical Connector Pliers (WP 0397 00, Item 31)

Personnel Required
Unit Mechanic 63T10
Helper (H)

References
TM 9-2350-366-10-1

Equipment Condition
Engine stopped (TM 9-2350-366-10-1)
Vehicle blocked (TM 9-2350-366-10-1)
Engine access panel removed (WP 0308 00)
Front VISMOD access panels removed (WP 0307 00)
Transmission in 1st position (TM 9-2350-366-10-1)

TRANSMISSION DOES NOT HOLD 1ST POSITION—Continued **0055 00**

T

1. Remove harness 12349810 plug (1) from transmission jack (2).
2. Turn MASTER SWITCH ON.
3. Measure voltage between each socket on harness 12349810 plug (1) and ground. Multimeter should read 18 volts or more at sockets A (3), C (4), and E (5), and 0 volts for all remaining socket checks.
4. Does multimeter read less than 18 volts at sockets A, C, and E, or more than 0 volts for all remaining sockets?

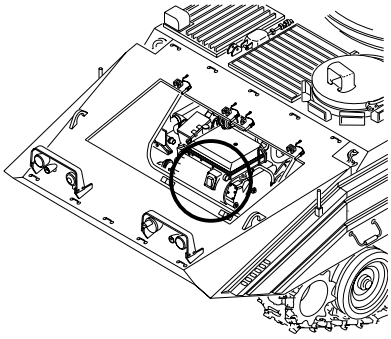

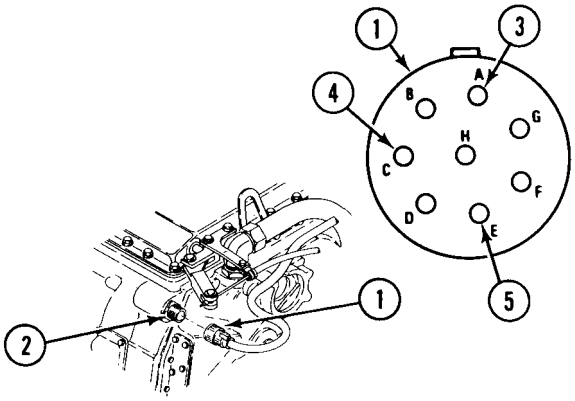

NO

TN

1. Faulty transmission. Beyond unit maintenance repair.
2. Notify supervisor.

YES

TRANSMISSION DOES NOT HOLD 1ST POSITION—Continued 0055 00

Y

1. Remove harness 12349810 plug (1) from harness 12349813 jack (2) at vehicle bulkhead.
2. Measure voltage between each socket on harness 12349813 jack (2) and ground. Multimeter should read 18 volts or more at sockets A (3), C (4), E (5), and J (6) and 0 volts for all remaining socket checks.
3. Does multimeter read less than 18 volts at sockets A (3), C (4), E (5), and J (6), or more than 0 volts for all remaining sockets?

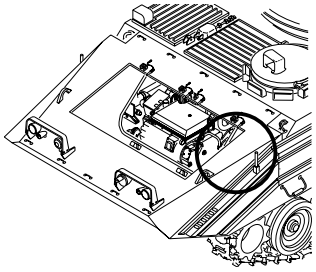

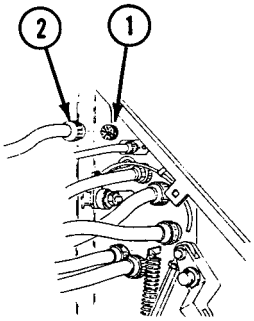

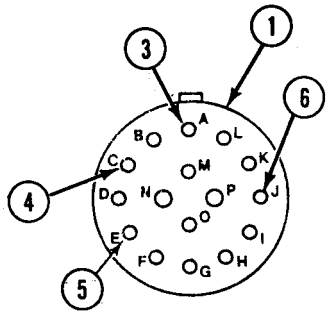

NO →

YN

1. Faulty harness 12349810 (transmission control wiring harness). Beyond unit maintenance repair.
2. Notify supervisor.

YES ↓

2Y

1. Turn MASTER SWITCH OFF.
2. Install harness 12349810 plug on transmission jack.
3. Remove transmission controller (WP 0266 00).
4. Measure resistance between transmission controller jack (1), pin M (2) and pins A thru G. Multimeter should read 0 ohms for pins A, C, and E, and infinity for all remaining pin checks.
5. Does multimeter read more than 0 ohms for pins A, C, and E, or less than infinity for all remaining pins?

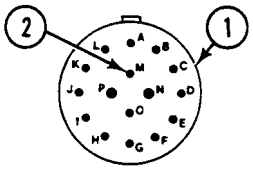

NO

2YN

1. Install transmission controller (WP 0266 00).
2. Faulty harness 12349813 (transmission wiring harness). Beyond unit maintenance repair.
3. Notify supervisor.

YES

3Y

1. Install harness 12349810 plug on harness 12349813 jack at vehicle bulkhead.
2. Replace faulty transmission controller (WP 0266 00).
3. Verify no faults found.

TRANSMISSION DOES NOT HOLD 2ND POSITION 0056 00

INITIAL SETUP:

Maintenance Level
Unit

Tools and Special Tools
General Mechanic's Tool Kit: Automotive (WP 0397 00, Item 64)
Multimeter (WP 0397 00, Item 30)
Electrical Connector Pliers (WP 0397 00, Item 31)

Personnel Required
Unit Mechanic 63T10
Helper (H)

References
TM 9-2350-366-10-1

Equipment Condition
Engine stopped (TM 9-2350-366-10-1)
Vehicle blocked (TM 9-2350-366-10-1)
Engine access panel removed (WP 0308 00)
Front VISMOD access panels removed (WP 0307 00)
Transmission in 1-2 position (TM 9-2350-366-10-1)

T

1. Remove harness 12349810 plug (1) from transmission jack (2).
2. Turn MASTER SWITCH ON.
3. Measure voltage between each socket on harness 12349810 plug (1) and ground. Multimeter should read 18 volts or more at sockets A (3), C (4), E (5), and G (6), and 0 volts for all remaining socket checks.
4. Does multimeter read less than 18 volts at sockets A (3), C (4), E (5), and G (6), or more than 0 volts for all remaining sockets?

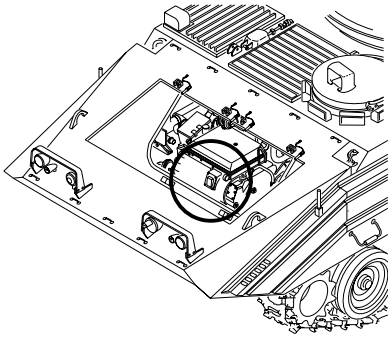

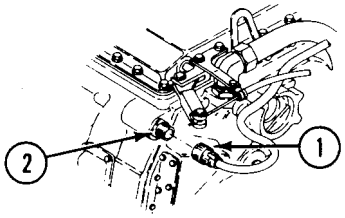

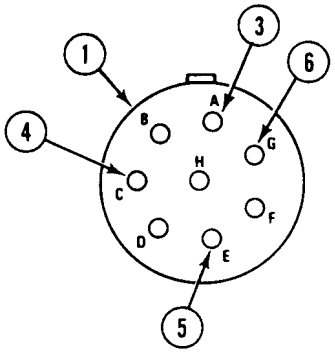

NO

TN

1. Faulty transmission. Beyond unit maintenance repair.
2. Notify supervisor.

YES

TRANSMISSION DOES NOT HOLD 2ND POSITION—Continued **0056 00**

Y

1. Remove harness 12349810 plug (1) from harness 12349813 jack (2) at vehicle bulkhead.
2. Measure voltage between each socket on harness 12349813 jack (2) and ground. Multimeter should read 18 volts or more at sockets A (3), C (4), E (5), G (6), and J (7) and 0 volts for all remaining socket checks.
3. Does multimeter read less than 18 volts at sockets A (3), C (4), E (5), G (6), and J (1), or more than 0 volts for all remaining sockets?

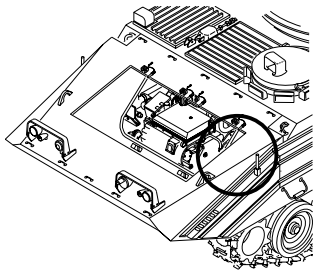

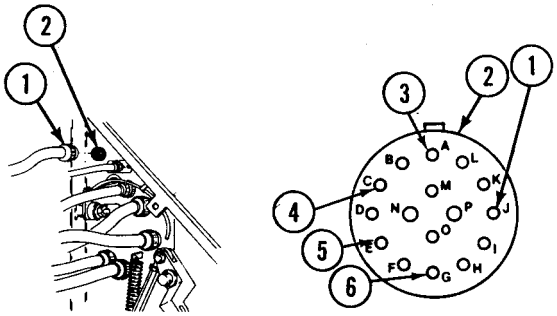

NO →

YN

1. Faulty transmission wiring harness 12349810. Beyond unit maintenance repair.
2. Notify supervisor.

YES ↓

2Y

1. Turn MASTER SWITCH OFF.
2. Install harness 12349810 plug on transmission jack.
3. Remove transmission controller (WP 0266 00).
4. Measure resistance between transmission controller jack (1), pin M (2) and pins A thru G. Multimeter should read 0 ohms for pins A, C, E, and G, and infinity for all remaining pin checks.
5. Does multimeter read more than 0 ohms for pins A, C, E, and G, or less than infinity for all remaining pins?

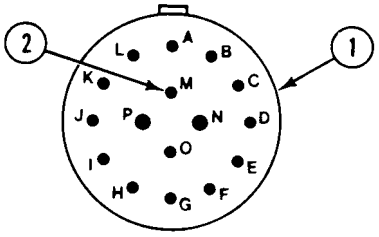

NO

2YN

1. Install transmission controller (WP 0266 00).
2. Faulty transmission controller wiring harness 12349813. Beyond unit maintenance repair.
3. Notify supervisor.

YES

3Y

1. Install transmission wiring harness 12349810 plug on transmission controller wiring harness 12349813 jack at vehicle bulkhead.
2. Replace faulty transmission controller (WP 0266 00).
3. Verify no faults found.

TRANSMISSION DOES NOT HOLD 3RD POSITION 0057 00

INITIAL SETUP:

Maintenance Level
Unit

Tools and Special Tools
General Mechanic's Tool Kit: Automotive (WP 0397 00, Item 64)
Multimeter (WP 0397 00, Item 30)
Electrical Connector Pliers (WP 0397 00, Item 31)

Personnel Required
Unit Mechanic 63T10

References
TM 9-2350-366-10-1

Equipment Condition
Engine stopped (TM 9-2350-366-10-1)
Vehicle blocked (TM 9-2350-366-10-1)
Engine access cover plate removed (WP 0308 00)
Front VISMOD access panels removed (WP 0307 00)
Transmission in 1-3 position (TM 9-2350-366-10-1)

T

1. Remove harness 12349810 plug (1) from transmission jack (2).
2. Turn MASTER SWITCH ON.
3. Measure voltage between each socket on harness 12349810 plug (1) and ground. Multimeter should read 0 volts at socket B (3), D, (4) and H (5), and at least 18 volts for all remaining socket checks.
4. Does multimeter read more than 0 volts at sockets B (3), D, (4) and H (5), or less than 18 volts at all other sockets?

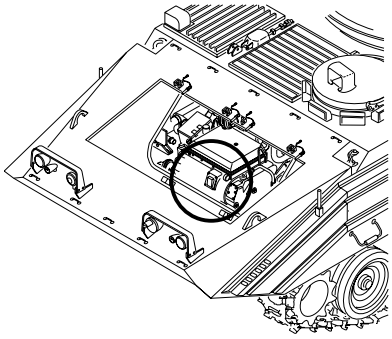

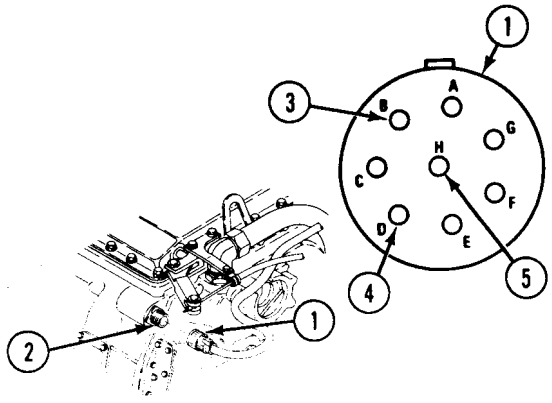

NO

TN

1. Faulty transmission. Beyond unit maintenance repair.
2. Notify supervisor.

YES

TRANSMISSION DOES NOT HOLD 3RD POSITION—Continued 0057 00

Y

1. Remove harness 12349810 plug (1) from harness 12349813 jack (2) at vehicle bulkhead.
2. Measure voltage between each socket on harness 12349813 jack (2) and ground. Multimeter should read 0 volts at socket B (3), D (4), and H (5), and at least 18 volts for all remaining socket checks.
3. Does multimeter read more than 0 volts at sockets B (3), D (4), and H (5), or less than 18 volts at all other sockets?

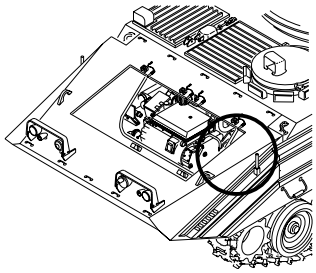

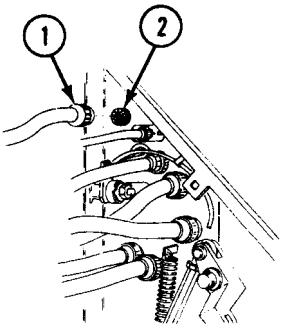

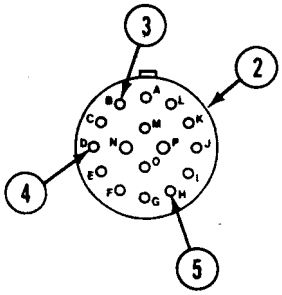

NO →

YN

1. Faulty transmission wiring harness 12349810. Beyond unit maintenance repair.
2. Notify supervisor.

YES ↓

2Y

1. Turn MASTER SWITCH OFF.
2. Install transmission wiring harness 12349810 plug on transmission jack.
3. Remove transmission controller (WP 0266 00).
4. Measure resistance between transmission controller jack (1), pin M (2), and pins A thru G. Multimeter should read infinity for pins B and D, and 0 ohms for pins A, C, E, F, and G.
5. Does multimeter read less than infinity for pins B and D or more than 0 ohms for pins A, C, E, F, and G?

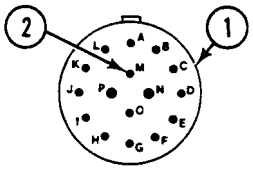

NO

2YN

1. Install transmission controller (WP 0266 00).
2. Faulty transmission controller harness 12349813. Beyond unit maintenance repair.
3. Notify supervisor.

YES

3Y

1. Install transmission wiring harness 12349810 plug on transmission controller wiring harness 12349813 jack at vehicle bulkhead.
2. Replace faulty transmission controller (WP 0266 00).
3. Verify no faults found.

TRANSMISSION DOES NOT REVERSE 0058 00

INITIAL SETUP:

Maintenance Level
Unit

Tools and Special Tools
General Mechanic's Tool Kit: Automotive (WP 0397 00, Item 64)
Multimeter (WP 0397 00, Item 30)
Electrical Connector Pliers (WP 0397 00, Item 31)

Personnel Required
Unit Mechanic 63T10
Helper (H)

References
TM 9-2350-366-10-1

Equipment Condition
Engine stopped (TM 9-2350-366-10-1)
Vehicle blocked (TM 9-2350-366-10-1)
Engine access cover plate removed (WP 0308 00)
Front VISMOD access panels removed (WP 0307 00)
Transmission in R position

T

1. Remove harness 12349810 plug (1) from transmission jack (2).
2. Turn MASTER SWITCH ON.
3. Measure voltage between each socket on harness 12349810 plug (1) and ground. Multimeter should read 18 volts or more at sockets B (3), C (4), and E (5), and 0 volts for all remaining socket checks.
4. Does multimeter read less than 18 volts at sockets B, C, and E, or more than 0 volts at all other sockets?

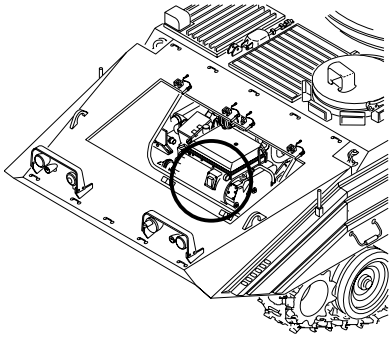

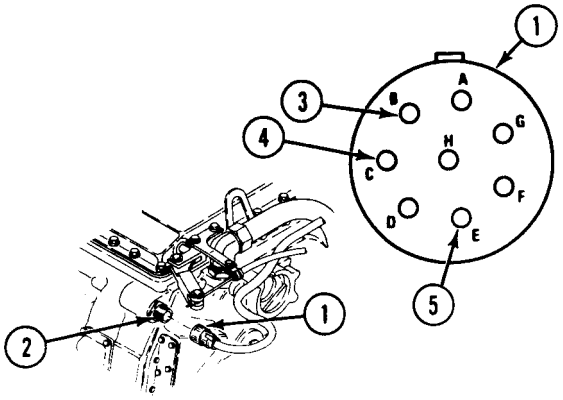

NO →

TN

1. Faulty transmission. Beyond unit maintenance repair.
2. Notify supervisor.

YES ↓

TRANSMISSION DOES NOT REVERSE—Continued **0058 00**

Y

1. Remove harness 12349810 plug (1) from harness 12349813 jack (2) at vehicle bulkhead.
2. Measure voltage between each socket on harness 12349813 jack (2) and ground. Multimeter should read 18 volts or more at sockets B (3), C (4), E (5), and J (6), and 0 volts for all remaining socket checks.
3. Does multimeter read less than 18 volts at sockets B, C, E, and J, or more than 0 volts at all other sockets?

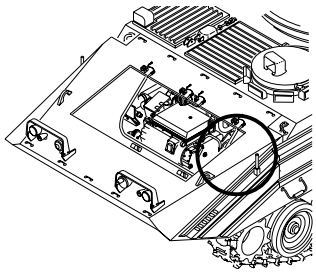

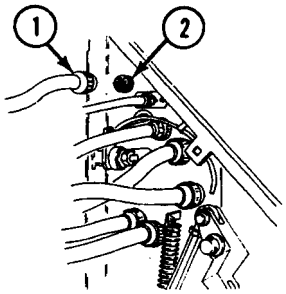

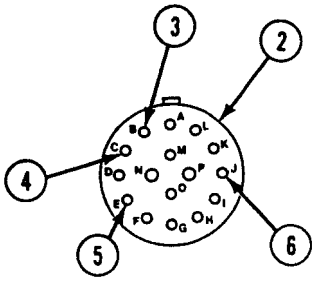

NO →

YN

1. Faulty transmission wiring harness 12349810. Beyond unit maintenance repair.
2. Notify supervisor.

YES ↓

2Y

1. Turn MASTER SWITCH OFF.
2. Install transmission wiring harness 12349810 plug on transmission jack.
3. Remove transmission controller (WP 0266 00).
4. Measure resistance between transmission controller jack (1), pin M (2), and pins A thru G. Multimeter should read 0 ohms for pins B, C, and E, and infinity for all other pins.
5. Does multimeter read more than 0 ohms for pins B, C, and E or less than infinity for all other pins?

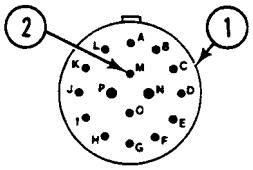

NO

2YN

1. Install transmission controller (WP 0266 00).
2. Faulty transmission controller harness 12349813. Beyond unit maintenance repair.
3. Notify supervisor.

YES

3Y

1. Install transmission wiring harness 12349810 plug on harness 12349813 jack at vehicle bulkhead.
2. Replace faulty transmission controller (WP 0266 00).
3. Verify no faults found.

TRANSMISSION DOES NOT PIVOT STEER 0059 00

INITIAL SETUP:

Maintenance Level
Unit

Tools and Special Tools
General Mechanic's Tool Kit: Automotive (WP 0397 00, Item 64)
Multimeter (WP 0397 00, Item 30)
Electrical Connector Pliers (WP 0397 00, Item 31)

Personnel Required
Unit Mechanic 63T10
Helper (H)

References
TM 9-2350-366-10-1

Equipment Condition
Engine stopped (TM 9-2350-366-10-1)
Vehicle blocked (TM 9-2350-366-10-1)
Engine access cover plate removed (WP 0308 00)
Front VISMOD access panels removed (WP 0307 00)
Transmission in PV position (TM 9-2350-366-10-1)

T

1. Remove harness 12349810 plug (1) from transmission jack (2).
2. Turn MASTER SWITCH ON.
3. Measure voltage between each socket on harness 12349810 plug (1) and ground. Multimeter should read 18 volts or more at sockets B (3), D (4), and E (5), and 0 volts for all remaining socket checks.
4. Does multimeter indicate an incorrect reading?

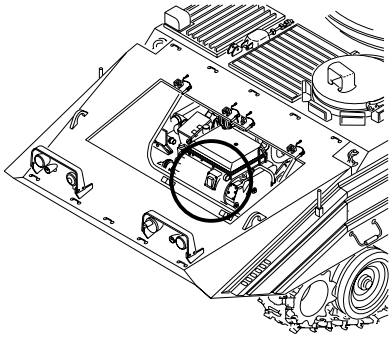

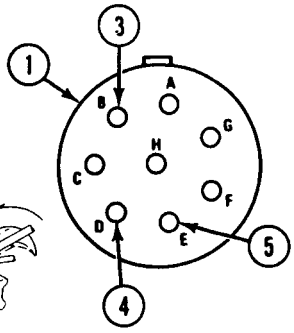

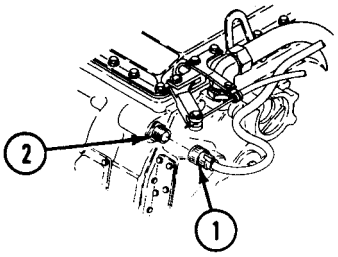

NO → **TN**

1. Faulty transmission. Beyond unit maintenance repair.
2. Notify supervisor.

YES ↓

TRANSMISSION DOES NOT PIVOT STEER—Continued **0059 00**

Y

1. Remove harness 12349810 plug (1) from harness 12349813 jack (2) at vehicle bulkhead.
2. Measure voltage between each socket on harness 12349813 jack (2) and ground. Multimeter should read 18 volts or more at sockets B (3), D (4), E (5), and J (6), and 0 volts for all remaining socket checks.
3. Does multimeter indicate an incorrect reading?

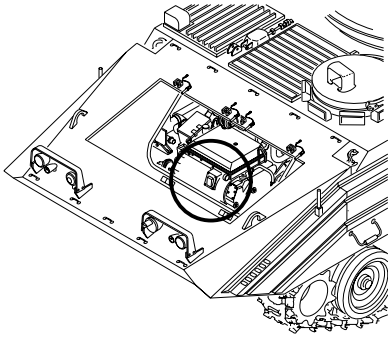

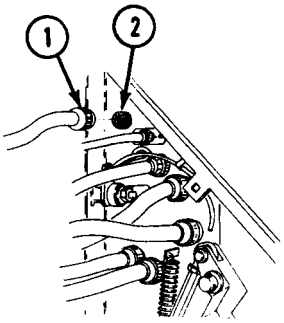

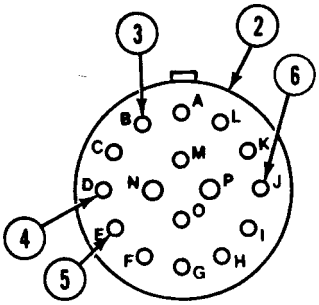

NO → **YN**

1. Faulty transmission wiring harness 12349810. Beyond unit maintenance repair.
2. Notify supervisor.

YES ↓

2Y

1. Turn MASTER SWITCH OFF.
2. Install harness 12349810 plug on transmission jack.
3. Remove transmission controller (WP 0266 00).
4. Measure resistance between transmission controller jack (1), pin M (2), and pins A thru G. Multimeter should read 0 ohms for pins B, D, and E, and infinity for all other pins.
5. Does multimeter indicate an incorrect reading?

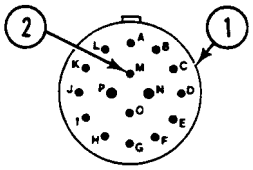

NO

2YN

1. Install transmission controller (WP 0266 00).
2. Faulty transmitter controller wiring harness 12349813. Beyond unit maintenance repair.
3. Notify supervisor.

YES

3Y

1. Install harness 12349810 plug on harness 12349813 jack at vehicle bulkhead.
2. Replace faulty transmission controller (WP 0266 00).
3. Verify no faults found.

TRANSMISSION HIGH TEMP INDICATOR COMES ON 0060 00

INITIAL SETUP:

Maintenance Level
Unit

Tools and Special Tools
General mechanic's tool kit: automotive (WP 0397 00, Item 64)
Pressure gauge kit (WP 0397 00, Item 35)

Personnel Required
Unit Mechanic 63T10

References
TM 9-2350-366-10-1
TM 9-2350-366-10-2

Equipment Condition
Engine stopped (TM 9-2350-366-10-1)
Vehicle blocked (TM 9-2350-366-10-1)
Engine access cover plate removed (WP 0308 00)
Driver's power plant access panel removed (WP 0312 00)
Front VISMOD access panels removed (WP 0307 00)
Transmission in SL (TM 9-2350-366-10-1)
Transmission oil level checked (TM 9-2350-366-10-1)
Turret rotated to 3200 mils (TM 9-2350-366-10-2)

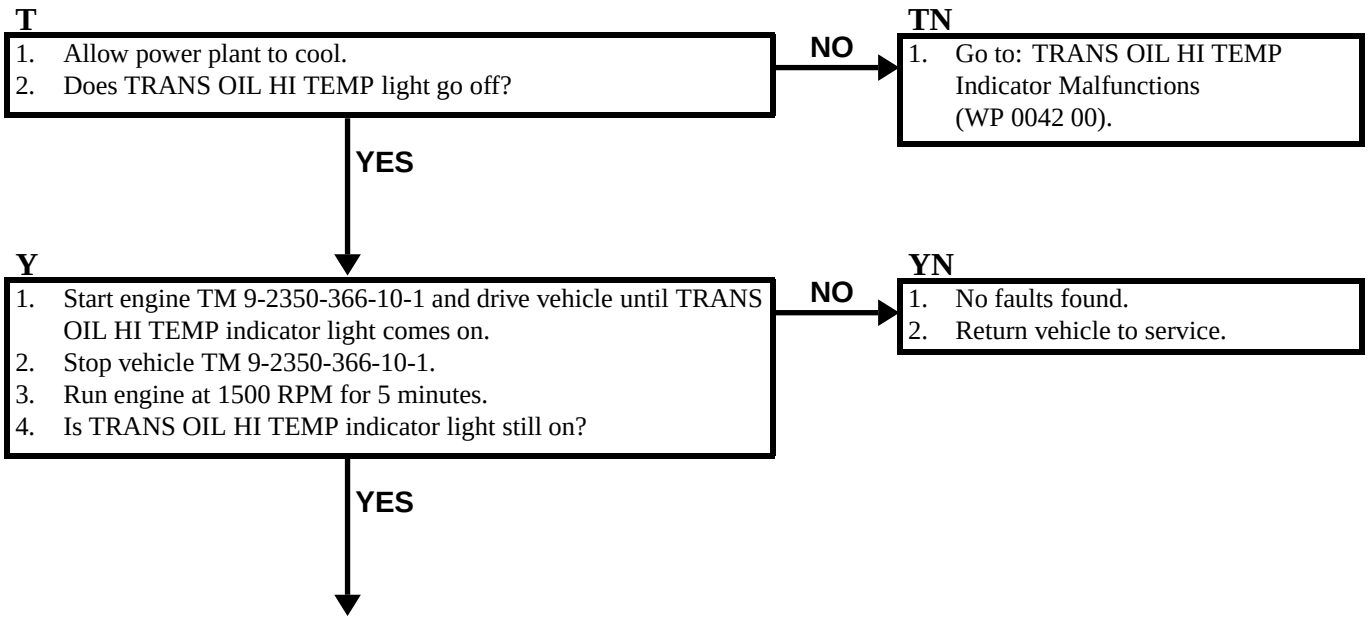

2Y

1. Stop vehicle TM 9-2350-366-10-1.
2. Remove plug (1) from MAIN port (2) on top of filter housing.
3. Install elbow (3) into MAIN port (2).
4. Remove quick-disconnect (4) and adapter (5) from test hose (6).
5. Install test hose (6) on elbow (3).
6. Start engine TM 9-2350-366-10-1.
7. With engine at 600 RPM, measure MAIN pressure with transmission in R, then in 1-4 position. Use 400 psi gauge. Pressure should be 280-325 psi in R, and 190-210 psi in 1-4 position.
8. Does pressure tester indicate an incorrect reading?

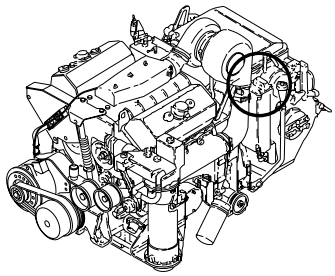

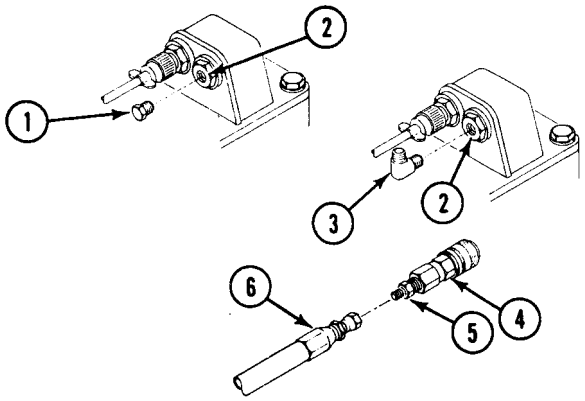

NO → GO TO **BY** (PAGE 0060 00-4)

YES

3Y

1. Stop engine TM 9-2350-366-10-1.
2. Remove pressure tester, elbow, and install MAIN port plug (1).
3. Remove plug (2) from FILTER IN port (3).
4. Remove turbo air inlet duct (4) and TRANS FILTER CLOGGED switch plug (5).
5. Install elbow (6) into FILTER IN port (3).
6. Install pressure tester into elbow (6).
7. Install turbo air inlet duct (4).
8. Start engine TM 9-2350-366-10-1.
9. With engine at 600 RPM, measure FILTER IN pressure with transmission in R, then in 1-4 position. Pressure should be 280-325 psi in R, and 190-210 psi in 1-4 position.
10. Is FILTER IN pressure 35 psi or more greater than MAIN pressure?

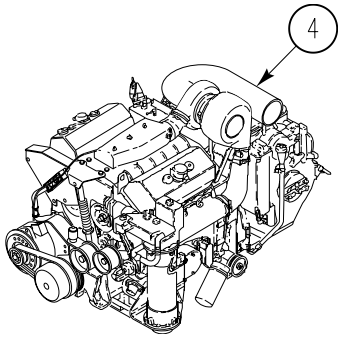

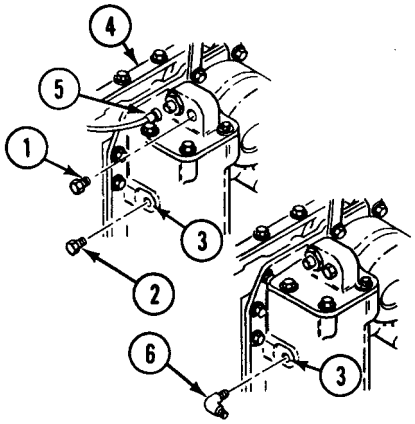

NO → GO TO **CY** (PAGE 0060 00-5)

YES ↓

4Y

1. Is TRANS FILTER CLOGGED indicator ON?

NO → GO TO **DY** (PAGE 0060 00-5)

YES

5Y

1. Stop engine TM 9-2350-366-10-1.
2. Replace transmission oil filter element (WP 0269 00).
3. Verify no faults found.

BY

1. Inspect transmission oil lines (1) connected to transmission cooler (2).
2. Are lines kinked or damaged?

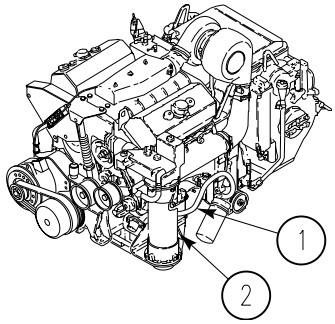

NO

BYN

1. Faulty transmission. Beyond unit maintenance repair.
2. Notify supervisor.

YES

B2Y

1. Replace transmission oil lines, as required (WP 0269 00).
2. Verify no faults found.

CY

1. Is FILTER IN pressure 20 psi to 35 psi greater than MAIN pressure?

NO →

CYN

1. Faulty transmission. Beyond unit maintenance repair.
2. Notify supervisor.

YES ↓

C2Y

1. Replace clogged transmission oil filter (WP 0269 00).
2. Verify no faults found.

DY

1. Is FILTER IN pressure (35 psi or more) greater than MAIN pressure?

NO →

DYN

1. Go to: TRANS FILTER CLOGGED indicator malfunctions (WP 0044 00).

YES ↓

D2Y

1. Faulty transmission. Beyond unit maintenance repair.
2. Notify supervisor.

TRANSMISSION OIL LOW PRESSURE INDICATOR COMES ON 0061 00

INITIAL SETUP:

Maintenance Level

Unit

Tools and Special Tools

General Mechanic's Tool Kit: Automotive (WP 0397 00, Item 64)
Tube-pipe fitting kit (WP 0397 00, Item 21)
Pressure gauge kit (WP 0397 00, Item 35)

Personnel Required

Unit Mechanic 63T10

References

TM 9-2350-366-10-1
TM 9-2350-366-10-2

Equipment Condition

Engine stopped (TM 9-2350-366-10-1)
Vehicle blocked (TM 9-2350-366-10-1)
Parking brake off (TM 9-2350-366-10-1)
Transmission controller in SL (TM 9-2350-366-10-1)
Transmission oil level checked (TM 9-2350-366-10-1)
Power plant warm (TM 9-2350-366-10-1)
Idle speed set at 600 RPM (TM 9-2350-366-10-1)
Turret rotated to 3200 mils (TM 9-2350-366-10-2)
VISMOD access panels removed (WP 0307 00)
Engine access cover plate removed (WP 0308 00)
Driver access panel removed (WP 0312 00)
Rear access panel removed (WP 0309 00)

T

1. Turn MASTER SWITCH to ON. See TM 9-2350-366-10-1.
2. Is TRANS LOW PRESSURE light on?

NO →

TN

1. Go to trans oil pressure indicator malfunctions (WP 0041 00).

YES ↓

Y

1. Turn MASTER SWITCH to OFF.
2. Remove plug (1) from lube port switch (2).
3. Remove lube port switch (2) from tee (3).
4. Install pressure tester in tee (3).
5. Start engine; run at 1500 RPM. See TM 9-2350-366-10-1.
6. Measure lube pressure with transmission in SL. Use 160 PSI gauge. Pressure should be greater than 4 psi.
7. Does pressure gauge read less than 4 psi?

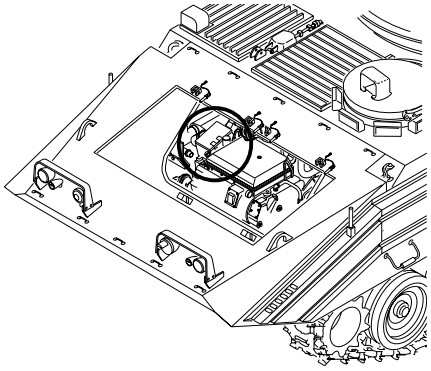

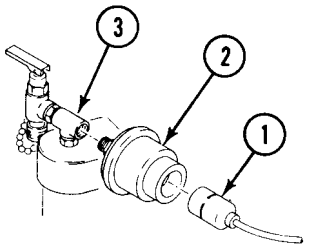

NO

YN

1. Go to trans oil pressure indicator malfunctions (WP 0041 00).

YES

2Y

1. Stop engine. See TM 9-2350-366-10-1.
2. Remove pressure tester and install switch.
3. Remove plug (1) from MAIN port (2).
4. Install 4730-00-254-6211 elbow (3) into MAIN (2) port.
5. Remove quick disconnect (4) and adapter (5) from test hose (6).
6. Install test hose (6) on elbow (3).
7. Start engine. See TM 9-2350-366-10.
8. With engine at 600 rpm, measure MAIN pressure with transmission in R and then in 1-4 position. Use 400 PSI gauge. Pressure should be between 280–325 psi in R. Pressure should be between 190–210 psi in 1-4 position.
9. Does pressure gauge reading differ from above step?

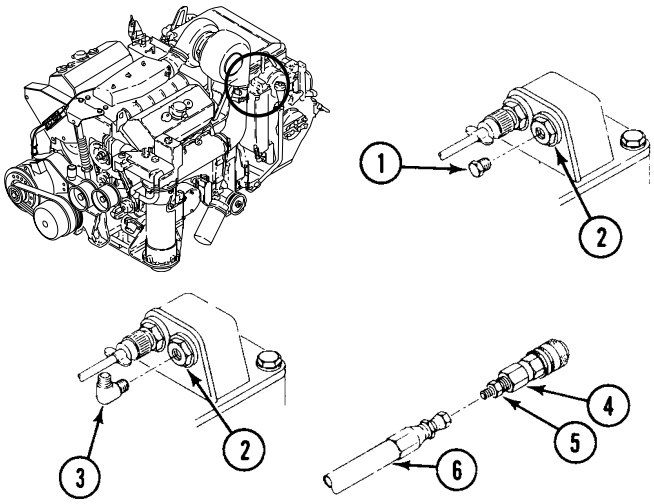

NO

2YN

1. Transmission low lube pressure.
2. Beyond unit maintenance repair.
3. Notify supervisor.

YES

3Y

1. Stop engine. See TM 9-2350-366-10-1.
2. Remove pressure tester and install MAIN port plug (1).
3. Remove plug (2) from FILTER IN port (3).
4. Remove turbo air inlet duct (4) and trans filter clogged switch plug (5).
5. Install 4730-00-254-6225 elbow (6) into FILTER IN port (3).
6. Install pressure tester on elbow (6). Use 400 PSI gauge.
7. Install turbo air inlet duct (4).
8. Start engine. See TM 9-2350-366-10-1.
9. With engine at 600 rpm, measure FILTER IN pressure with transmission in R and then in 1-4 position. FILTER IN pressure should be within 35 psi of MAIN pressure.
10. Is FILTER IN pressure, at 35 psi or more, greater than MAIN pressure?

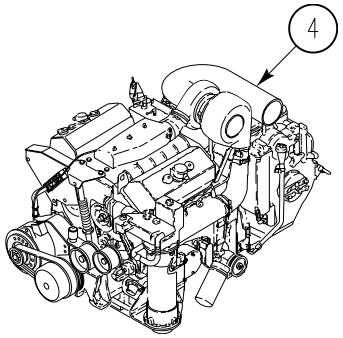

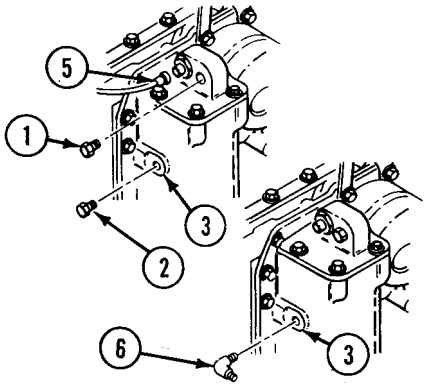

NO → GO TO **BY** (PAGE 0061 00-5)

YES ↓

4Y

1. Is trans filter clogged indicator ON?

NO → GO TO **CY** (PAGE 0061 00-6)

YES

5Y

1. Stop engine. See TM 9-2350-366-10-1.
2. Replace transmission oil filter element (WP 0269 00).
3. Verify no faults found.

BY

1. Is FILTER IN pressure within 20 psi of MAIN pressure?

NO → **BYN**

1. Replace transmission oil filter element (WP 0269 00).
2. Verify no faults found.

YES

B2Y

1. Check transmission brake adjustment (WP 0280 00).
2. Are transmission brakes correctly adjusted?

NO → **B2YN**

1. Adjust transmission brakes (WP 0279 00).
2. Verify no faults found.

YES

B3Y

1. Check service brake control linkage adjustment (WP 0280 00).
2. Is service brake control linkage properly adjusted?

NO → **B3YN**

1. Adjust service brake control linkage (WP 0278 00).
2. Verify no faults found.

YES

B4Y

1. Verify no faults found.

CY

1. Is FILTER IN pressure, at 35 psi or more, greater than MAIN pressure.

NO

CYN

1. Go to transmission filter clogged indicator malfunctions (WP 0044 00).

YES

C2Y

1. Faulty transmission beyond unit maintenance repair.
2. Notify supervisor.

TRANSMISSION SYSTEM SCHEMATIC 0062 00

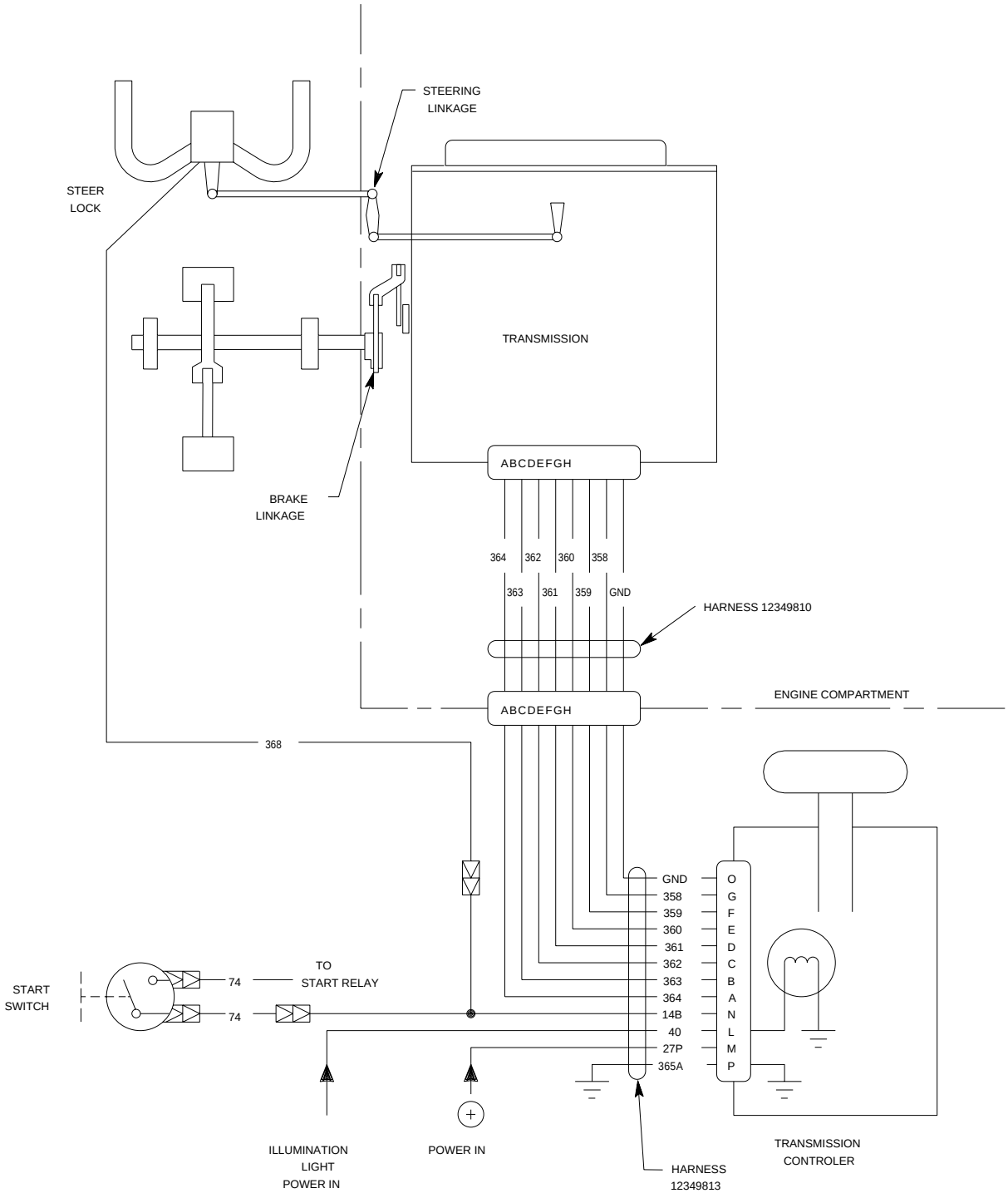

STEERING LOCK MALFUNCTIONS 0063 00

INITIAL SETUP:

Maintenance Level
Unit

Tools and Special Tools
General mechanic's tool kit: automotive (WP 0397 00, Item 64)

Personnel Required
Unit Mech 63T10

References
TM 9-2350-366-10-1

Equipment Condition
Engine stopped (TM 9-2350-366-10-1)
Vehicle blocked (TM 9-2350-366-10-1)
Transmission controller in any position except SL (TM 9-2350-366-10-1)

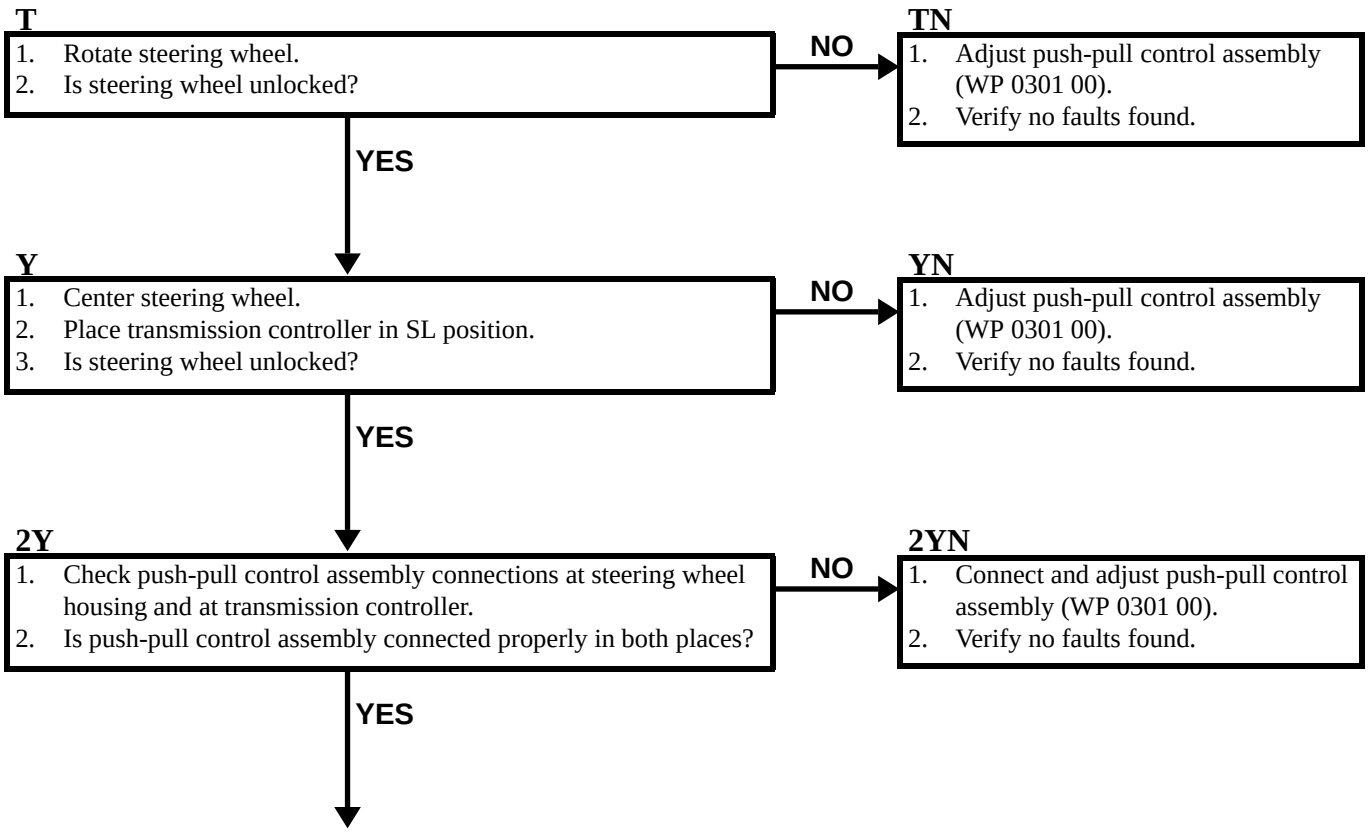

STEERING LOCK MALFUNCTIONS—Continued **0063 00**

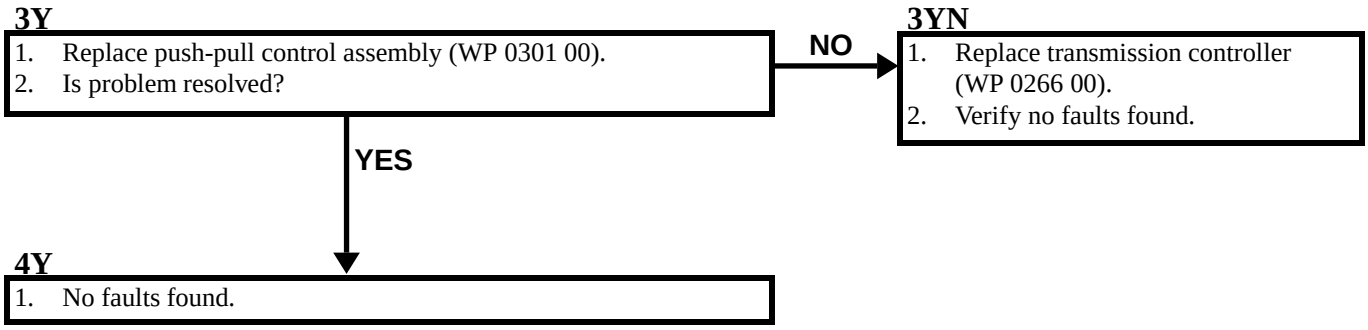

STEERING LOCK SCHEMATIC 0064 00

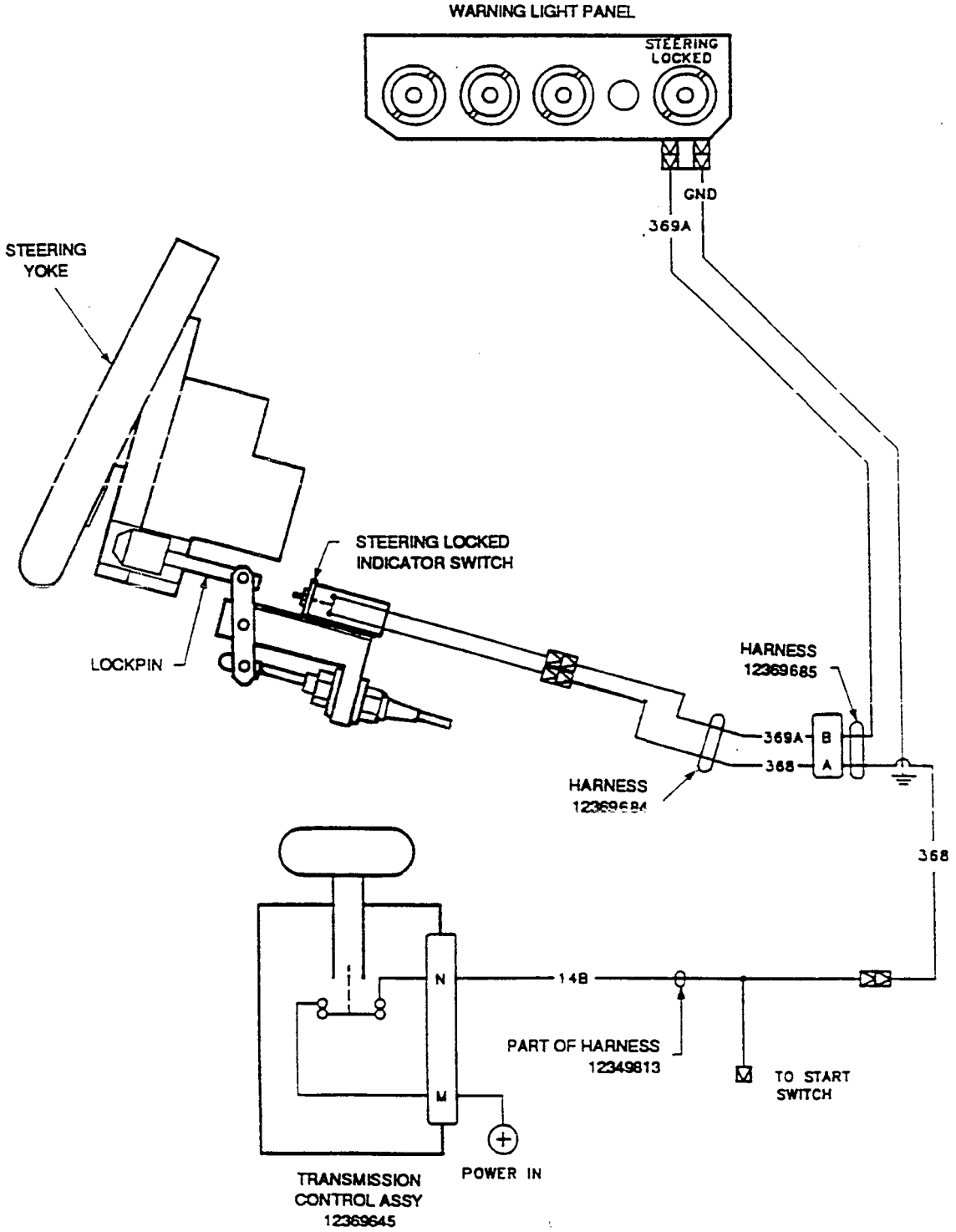

BILGE PUMP AND/OR LIGHT DON'T WORK 0065 00

INITIAL SETUP:

Maintenance Level

Unit

Tools and Special Tools

Unit Mechanic's Tool Kit: Automotive (WP 0397 00, Item 64)
Multimeter (WP 0397 00, Item 30)

Personnel Required

Unit Mechanic 63T10

References

TM 9-2350-366-10-1

Equipment Condition

Engine stopped (TM 9-2350-366-10-1)
Vehicle blocked (TM 9-2350-366-10-1)
MASTER SWITCH OFF (TM 9-2350-366-10-1)
Driver's engine access panel removed (front bilge pump) (WP 0312 00)
Rear floor plate removed (rear bilge pump) (WP 0343 00)

T

1. Turn BILGE PUMP switch to ON. See TM 9-2350-366-10-1.
2. Does bilge pump light come on?

NO → GO TO **BY** (PAGE 0065 00-3)

YES

Y

1. Does bilge pump fail to start?

NO → GO TO **CY** (PAGE 0065 00-5)

YES

2Y

1. Remove circuit 452 plug (1) from pump jack (2).
2. Measure voltage between plug 452 and ground.
3. Does multimeter read 17 or more volts?

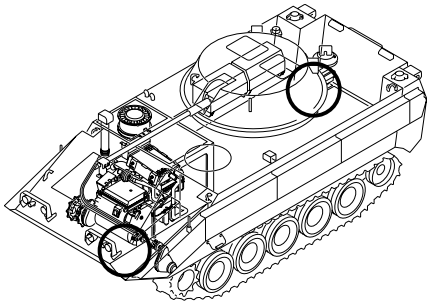

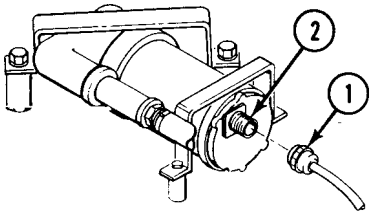

NO

2YN

1. Repair harness 12349881-3 (WP 0189 00).
2. Verify no faults found.

YES

3Y

1. Turn MASTER SWITCH to OFF.
2. Check continuity between bilge pump body (1) and ground lead (2).
3. Is there continuity?

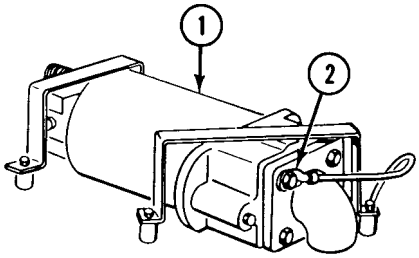

NO

3YN

1. Replace ground lead 10886459 to bilge pump (WP 0189 00).
2. Verify no faults found.

YES

4Y

1. Replace bilge pump (WP 0356 00).
2. Verify no faults found.

BY

1. Remove BILGE PUMP ON indicator lens (1) and bulb (2).
2. Check continuity between bulb center contact and bulb base.
3. Is there any continuity?

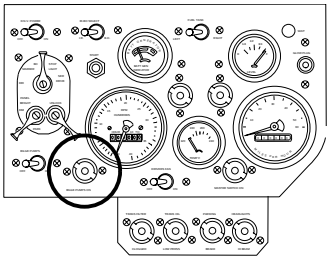

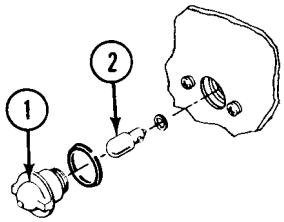

NO

BYN

1. Replace BILGE PUMP ON indicator light bulb (WP 0217 00).
2. Verify no faults found.

YES

B2Y

1. Measure voltage between bulb socket center contact (1) and ground.
2. Does multimeter read less than 17 volts?

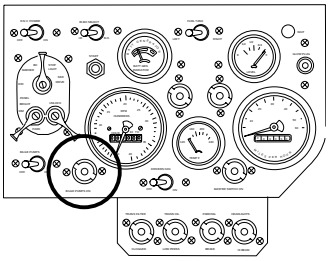

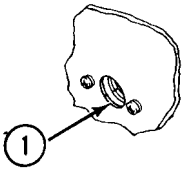

NO

B2YN

1. Replace BILGE PUMP ON light assembly (WP 0218 00).
2. Verify no faults found.

YES

B3Y

1. Turn MASTER SWITCH to OFF.
2. Install plug 452 B on indicator light assembly.
3. Remove master switch panel from distribution box (WP 0246 00).
4. Remove plug 450 B (1) and plug 450 C (2) from bilge pump circuit breaker (3).
5. Check continuity across circuit breaker jack.
6. Is there continuity?

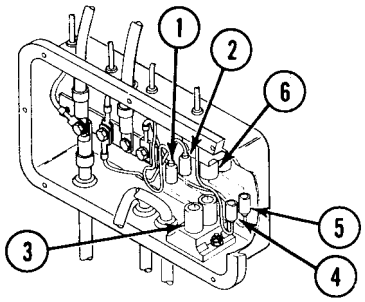

NO →

B3YN

1. Replace bilge pump circuit breaker (WP 0258 00).
2. Verify no faults found.

YES ↓

B4Y

1. Check continuity between plug 450 C (3) to lead 450 C lead end at bus bar (4).
2. Is there continuity?

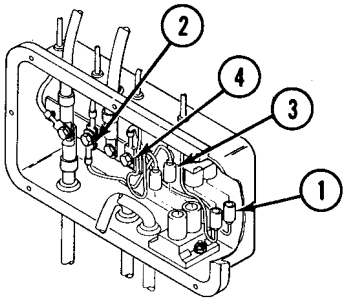

NO →

B4YN

1. Replace lead 10861710 (WP 0189 00).
2. Install bilge pump lead.
3. Verify no faults found.

YES ↓

B5Y

1. Remove instrument panel for access (WP 0220 00).
2. Remove plug 450 B (1) and plug 452 B (2) from bilge pump switch (3).
3. Check continuity between bilge pump switch jacks with BILGE PUMP switch on.
4. Is there continuity?

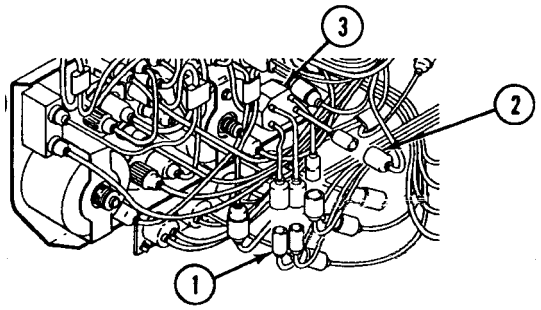

NO → **B5YN**

1. Install master switch panel (WP 0220 00).
2. Replace bilge pump switch (WP 0247 00).
3. Verify no faults found.

YES → **B6Y**

1. Repair harness 137681 circuit 450 B (WP 0189 00).
2. Verify no faults founds.

CY

1. Have bilge pumps been serviced?

NO → **CYN**

1. Service bilge pumps. See TM 9-2350-366-10-1.
2. Verify no faults found.

YES → **C2Y**

1. Inspect bilge pump pipes. See TM 9-2350-366-10-1.
2. Are bilge pump pipes damaged?

NO → **C2YN**

1. Replace bilge pump (WP 0356 00).
2. Verify no faults found.

YES → **C3Y**

1. Replace bilge pump pipes (WP 0355 00).
2. Verify no faults found.

BILGE PUMP SCHEMATIC 0066 00

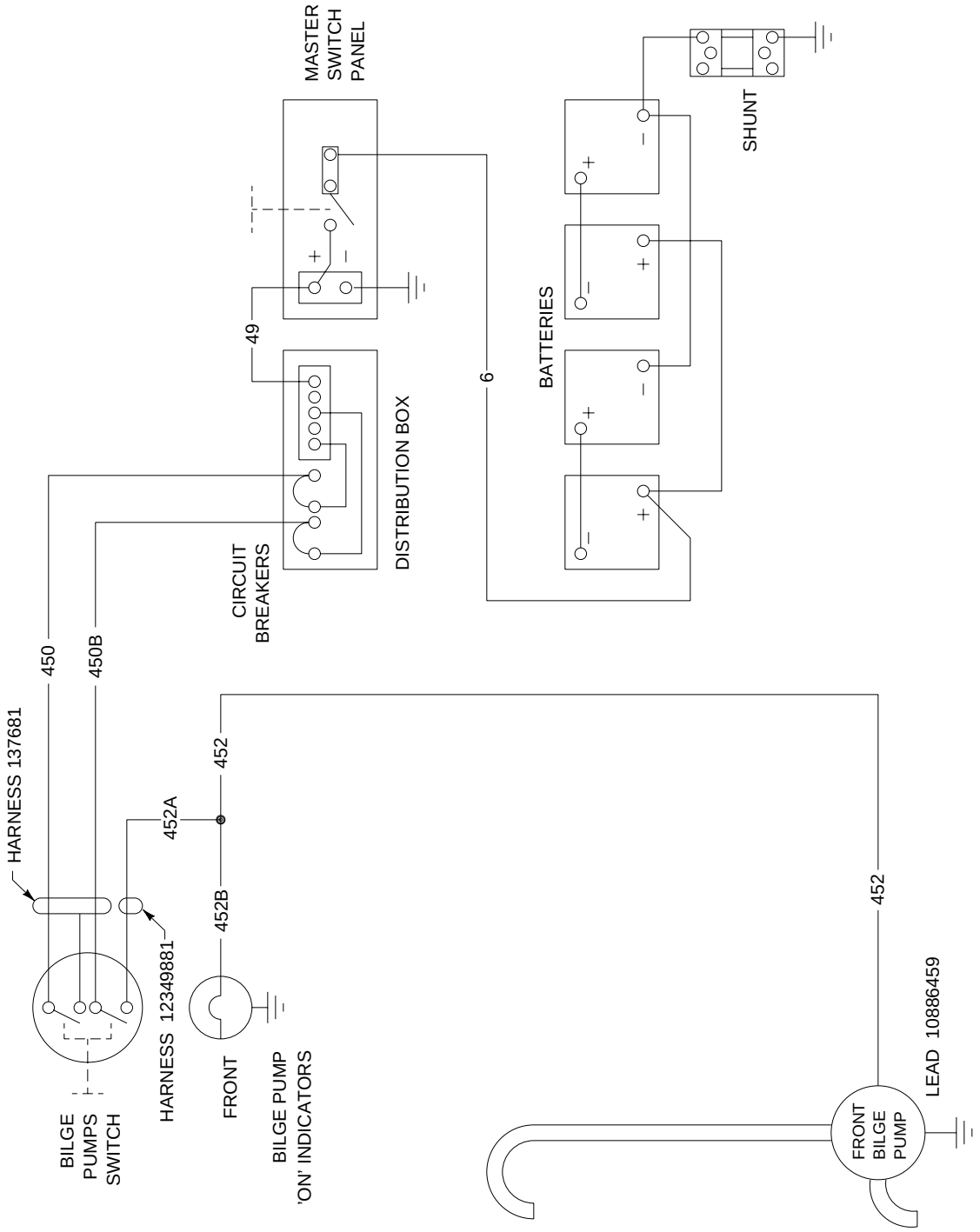

PERSONNEL HEATER MALFUNCTIONS 0067 00

INITIAL SETUP:

Maintenance Level

Unit

Tools and Special Tools

General mechanic's tool kit: automotive (WP 0397 00, Item 64)
Multimeter (WP 0397 00, Item 30)
Electrical connector pliers (WP 0397 00, Item 31)

Personnel Required

Unit Mech 63T10

References

TM 9-2350-277-20-1
TM 9-2350-366-10-1
TM 9-2350-366-10-2
TM 9-2540-205-24&P

Equipment Condition

Engine stopped (TM 9-2350-366-10-1)
Vehicle blocked (TM 9-2350-366-10-1)
Engine access panels removed (WP 0309 00)
Driver's power plant access panels removed (WP 0312 00)
Heater on LOW (TM 9-2350-366-10-1)
Rear floor plates removed (WP 0343 00)
Front VISMOD access panels removed (WP 0307 00)
Turret rotated to gain access to power plant rear engine access panel (TM 9-2350-366-10-2)

T

1. Move MASTER POWER switch to ON.
2. Press HEATER ON indicator lens TM 9-2350-366-10.
3. Does indicator light come on?

NO → GO TO **BY** (PAGE 0067 00-3)

YES

Y

1. Release HEATER ON indicator.
2. Move HEATER switch to START.
3. Does heater blower come on?

NO → GO TO **CY** (PAGE 0067 00-5)

YES

2Y

1. Did heater fuel pump come on?

NO → GO TO **EY** (PAGE 0067 00-8)

YES

3Y

1. Does HEATER ON indicator come on in less than 3 minutes?

NO → GO TO **GY** (PAGE 0067 00-10)

YES

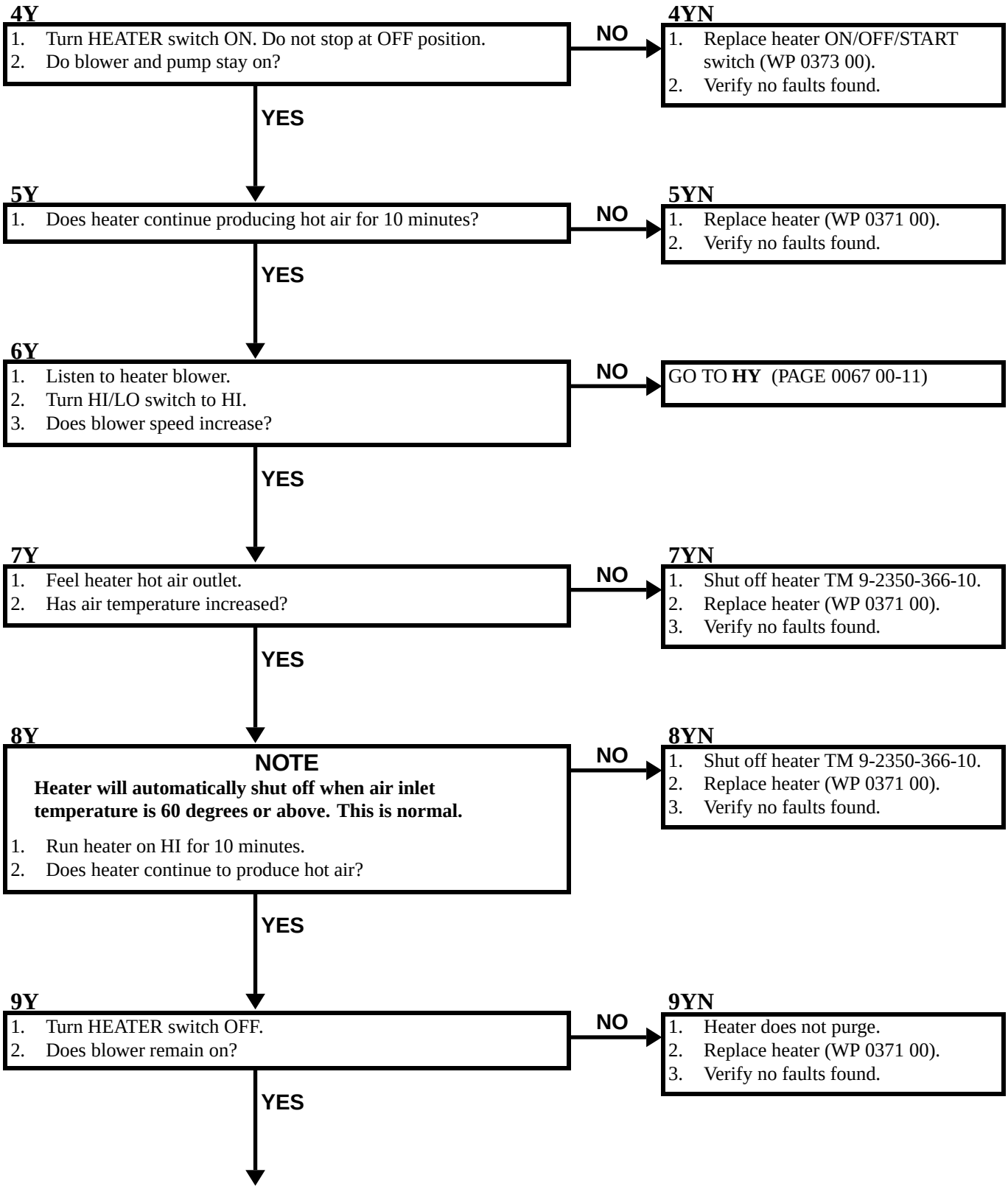
4Y
1. Turn HEATER switch ON. Do not stop at OFF position.
2. Do blower and pump stay on?
NO
4YN
1. Replace heater ON/OFF/START switch (WP 0373 00).
2. Verify no faults found.
YES
5Y
1. Does heater continue producing hot air for 10 minutes?
NO
5YN
1. Replace heater (WP 0371 00).
2. Verify no faults found.
YES
6Y
1. Listen to heater blower.
2. Turn HI/LO switch to HI.
3. Does blower speed increase?
NO
GO TO HY (PAGE 0067 00-11)
YES
7Y
1. Feel heater hot air outlet.
2. Has air temperature increased?
NO
7YN
1. Shut off heater TM 9-2350-366-10.
2. Replace heater (WP 0371 00).
3. Verify no faults found.
YES
8Y
NOTE
Heater will automatically shut off when air inlet temperature is 60 degrees or above. This is normal.
1. Run heater on HI for 10 minutes.
2. Does heater continue to produce hot air?
NO
8YN
1. Shut off heater TM 9-2350-366-10.
2. Replace heater (WP 0371 00).
3. Verify no faults found.
YES
9Y
1. Turn HEATER switch OFF.
2. Does blower remain on?
NO
9YN
1. Heater does not purge.
2. Replace heater (WP 0371 00).
3. Verify no faults found.
YES

10Y

1. Listen to heater until blower shuts off.
2. Does blower shut off in less than 5 minutes?

NO → **10YN**

1. Replace heater (WP 0371 00).
2. Verify no faults found.

YES ↓

11Y

1. Intermittent heater malfunction. Beyond unit maintenance repair.
2. Notify supervisor.

BY

1. Remove heater indicator cover lens (1) and bulb (2).
2. Check continuity between bulb center contact and base.
3. Is there continuity?

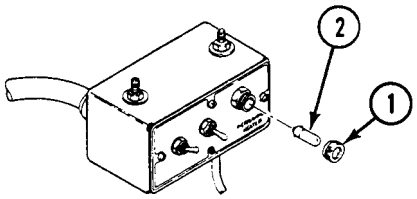

NO → **BYN**

1. Replace heater bulb (WP 0371 00).
2. Verify no faults found.

YES ↓

B2Y

1. Remove harness 1268797 circuit 400 plug (1) from control box jack (2).
2. Measure voltage between harness 12268797 circuit 400 plug pin (1) and ground.
3. Does multimeter read 17 volts or more?

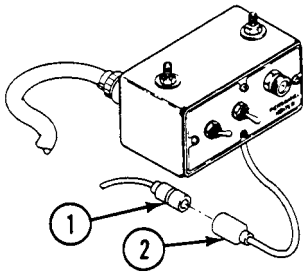

NO → **B2YN**

1. Repair harness 12268797 circuit 400 between MASTER SWITCH and heater control box (WP 0189 00).
2. Verify no faults found.

YES ↓

B3Y

1. Remove heater control box (WP 0373 00).
2. Check continuity between circuit breaker terminals 16 (7) and 17 (6).
3. Does multimeter read 0 ohms?

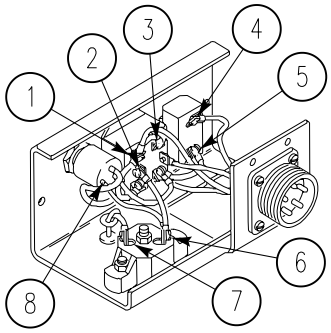

NO

B3YN

1. Replace heater circuit breaker (WP 0371 00).
2. Verify no faults found.

YES

B4Y

1. Check continuity between lead ends, from circuit breaker terminal 17 (6) to indicator light terminal 3 (8).
2. Does multimeter read 0 ohms?

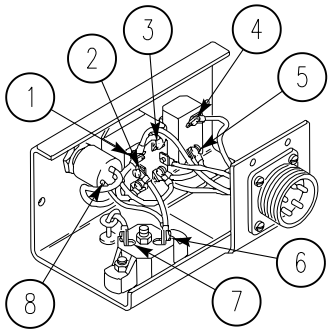

NO

B4YN

1. Repair/replace faulty lead (WP 0371 00).
2. Verify no faults found.

YES

B5Y

1. Replace indicator light assembly (WP 0219 00).
2. Verify no faults found.

CY

1. Remove harness 10942956 plug (1) from heater control box jack (2).
2. Measure voltage between heater control box jack (2), pin C (3), and ground with HEATER switch on START.
3. Does multimeter read 17 volts or more?

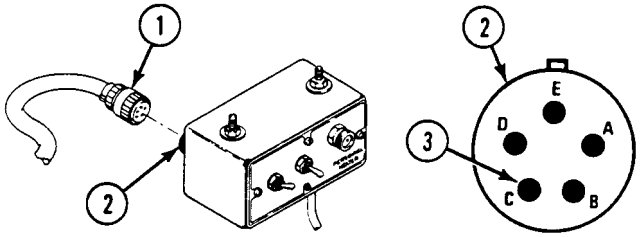

NO → GO TO **DY** (PAGE 0067 00-7)

YES

C2Y

WARNING

During turret rotation, damage may occur to the turret/driver's hatch and personnel may be injured or killed. Driver's hatch must be closed.

1. Rotate turret to allow access to heater.
2. Install harness 10942956 plug on heater control box jack.
3. Remove harness 10942956 plug (1) from heater jack (2).
4. Measure voltage between harness 10942956 plug (1), pin C (3), and ground with HEATER switch on START.
5. Does multimeter read 17 volts or more?

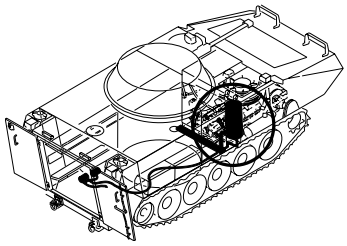

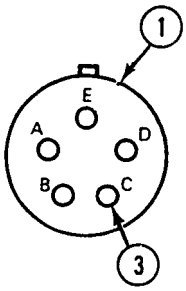

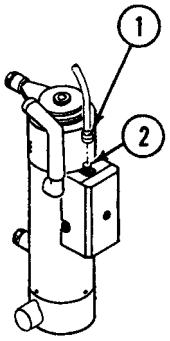

NO →

C2YN

1. Replace heater wiring harness (WP 0371 00).
2. Verify no faults found.

YES ↓

C3Y

1. Replace heater (WP 0371 00).
2. Verify no faults found.

DY

1. Remove heater control box (WP 0373 00).
2. Check continuity between lead ends from circuit breaker terminal 17 (6) and ON/OFF/START switch terminal 15 (1).
3. Does multimeter read 0 ohms?

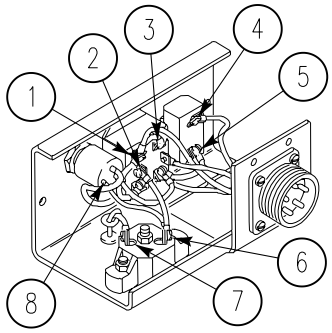

NO →

DYN

1. Repair/replace faulty lead (WP 0371 00).
2. Verify no faults found.

YES ↓

D2Y

1. Check continuity between lead ends from ON/OFF/START switch terminals 21 (3) and 14 (2).
2. Does multimeter read 0 ohms?

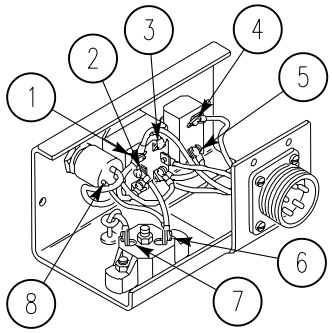

NO →

D2YN

1. Repair HEATER switch jumper lead between terminal 21 and 14 (WP 0371 00).
2. Verify no faults found.

YES ↓

D3Y

1. Replace heater ON/OFF/START switch (WP 0373 00).
2. Verify no faults found.

EY

1. Remove harness 10942956 plug (1) from heater control jack (2).
2. Measure voltage between heater control jack (2), pin A (3), and ground with HEATER switch on START.
3. Does multimeter read 17 volts or more?

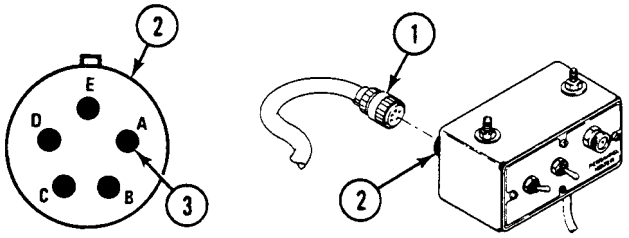

NO → GO TO **FY** (PAGE 0067 00-9)

YES

E2Y

1. Install harness 10942956 plug (1) on heater control jack (2).
2. Remove harness 10942956 plug (1) from heater fuel pump jack (2).
3. Measure voltage between harness 10942956 plug (1), pin and ground with HEATER switch on START.
4. Does multimeter read 17 volts or more?

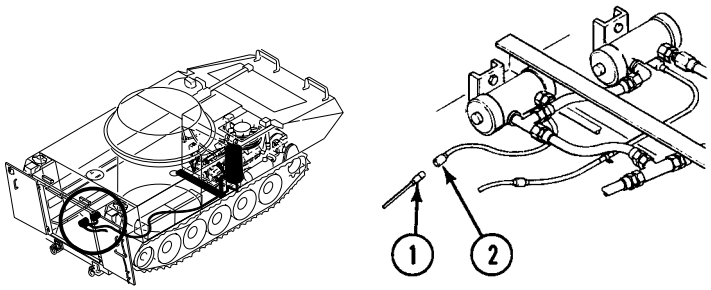

NO →

E2YN

1. Replace harness 10942956 circuit 402 (TM 9-2350-366-20-1).
2. Verify no faults found.

YES

E3Y

1. Replace heater fuel pump (WP 0376 00).
2. Verify no faults found.

FY

1. Remove heater control box (WP 0373 00).
2. Check continuity between lead ends of heater output jack (1), pin A (2), and ON/OFF/START switch terminal 14 (3).
3. Does multimeter read 0 ohms?

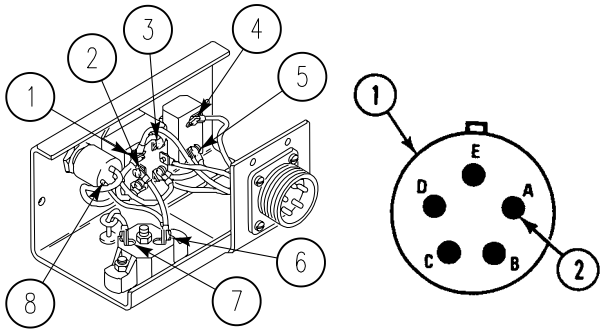

NO

FYN

1. Replace faulty lead (WP 0371 00).
2. Verify no faults found.

YES

F2Y

1. Replace heater ON/OFF/START switch (WP 0373 00).
2. Verify no faults found.

GY

1. Is heater exhaust cold?

NO → **GYN**

1. Replace heater (WP 0371 00).
2. Verify no faults found.

YES ↓

G2Y

1. Loosen fuel inlet line (1) to heater with HEATER switch on START.
2. Does fuel fail to flow out of loosened fitting?

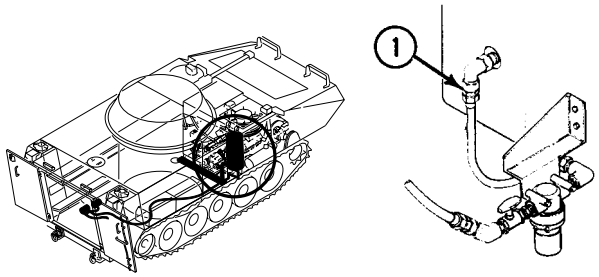

NO → **G2YN**

1. Replace heater (WP 0371 00).
2. Verify no faults found.

YES ↓

G3Y

1. Inspect fuel lines between tee valve (1) and heater (2).
2. Are all lines free from kinks, restrictions or other damage?

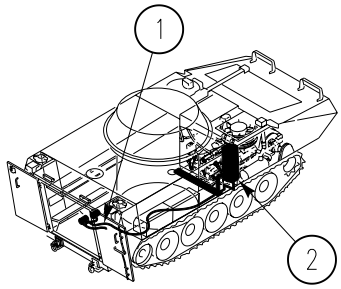

NO → **G3YN**

1. Replace heater fuel lines (WP 0378 00).
2. Verify no faults found.

YES ↓

G4Y

1. Replace heater fuel pump (WP 0376 00).
2. Verify no faults found.

HY

1. Remove heater control box (WP 0373 00).
2. Check continuity on HI/LO switch between terminals 12 (5) and 13 (4).
3. Does multimeter read 0 ohms?

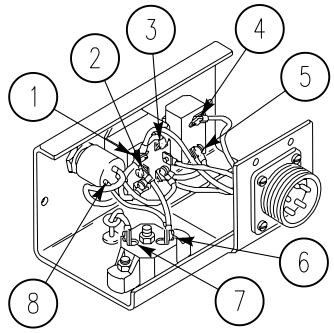

NO →

HYN

1. Replace heater HI/LO switch (WP 0371 00).
2. Verify no faults found.

YES ↓

H2Y

1. Repair lead between HEATER switch and jack or HEATER switch and ON/OFF/START switch. See TM 9-2350-277-20-1.
2. Verify no faults found.

PERSONNEL HEATER SCHEMATIC 0068 00

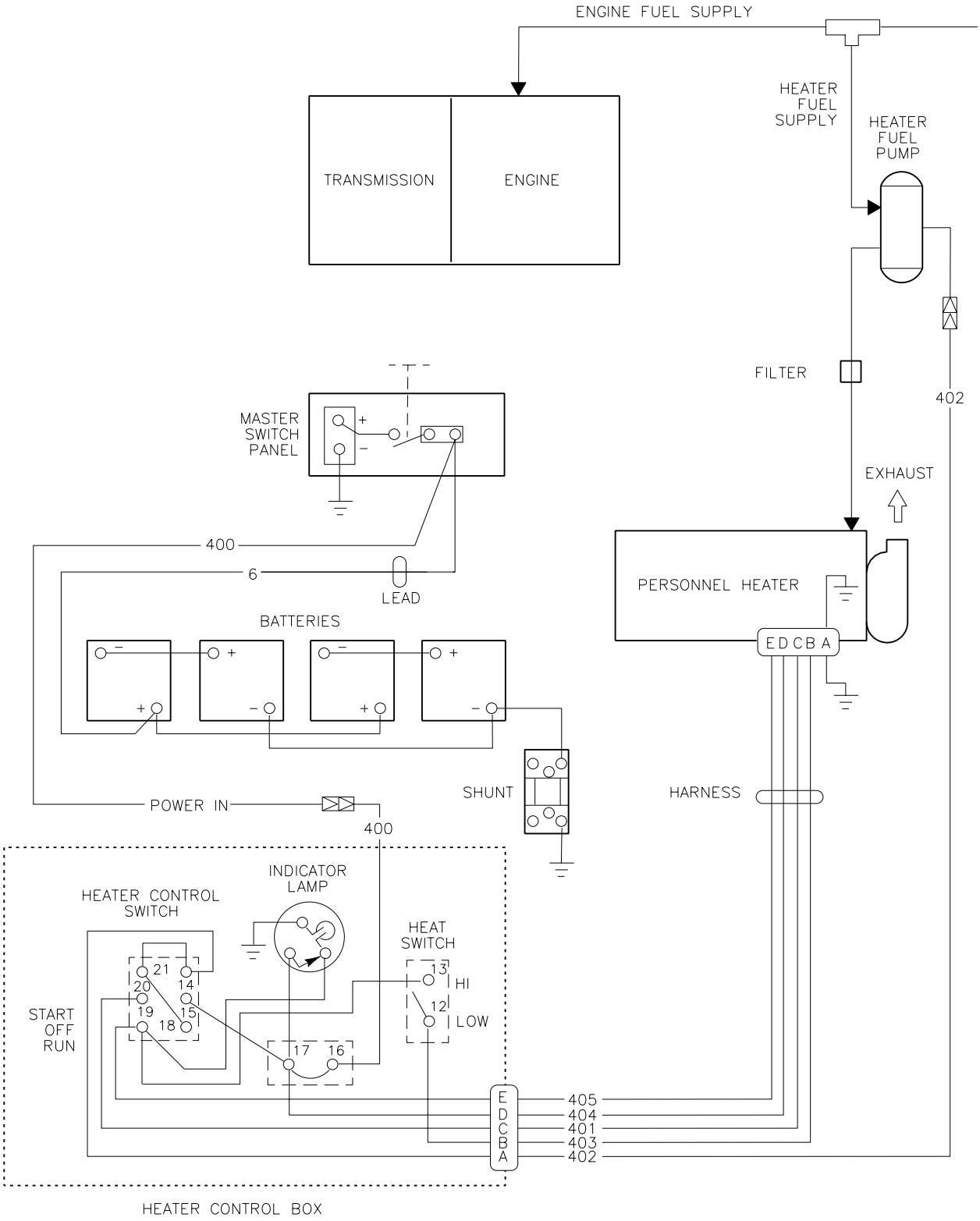

SPEEDOMETER MALFUNCTIONS 0069 00

INITIAL SETUP:

Maintenance Level

Unit

Tools and Special Tools

General Mechanic's Tool Kit: Automotive (WP 0397 00, Item 64)

Personnel Required

Unit Mechanic 63T10
Helper (H)

References

TM 9-2350-366-10-1
TM 9-2350-366-10-2

Equipment Condition

Engine stopped (TM 9-2350-366-10-1)
Vehicle blocked (TM 9-2350-366-10-1)
Turret rotated to 3200 mils (TM 9-2350-366-10-2)
Engine access cover plate removed (WP 0308 00)
Driver's power plant access panels removed (WP 0312 00)
Front VISMOD access panels removed (WP 0307 00)

T

1. Does speedometer fail to give any reading?

NO → GO TO **BY** (PAGE 0069 00-3)

YES

Y

1. Remove speedometer cable (1) from speedometer (2).
2. Check speedometer drive (3).
3. Does speedometer drive spin freely?

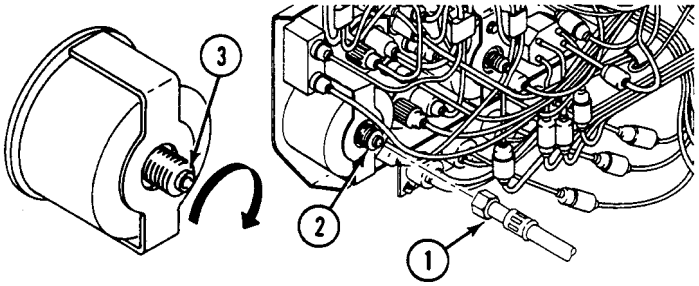

NO → **YN**

1. Replace speedometer (WP 0196 00).
2. Verify no faults found.

YES

SPEEDOMETER MALFUNCTIONS—Continued **0069 00**

2Y

1. Remove speedometer cable (1) and packing (2) from final drive adapter (3).
2. Check speedometer cable ends (4).
3. Does cable spin freely?

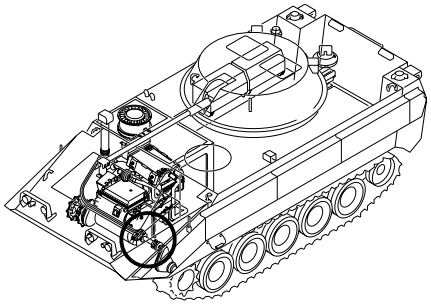

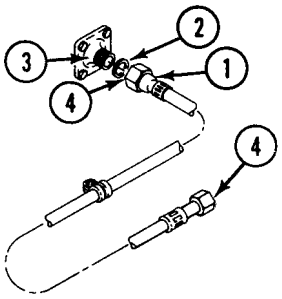

NO

2YN

1. Repair/replace speedometer cable (WP 0197 00) r (WP 0198 00).
2. Verify no faults found.

YES

3Y

1. Remove speedometer drive adapter from final drive (WP 0197 00).
2. Inspect final drive adapter.
3. Is final drive adapter seized or damaged?

NO

3YN

1. Replace speedometer (WP 0196 00).
2. Verify no faults found.

YES

4Y

1. Install speedometer cable on speedometer.
2. Replace final drive adapter (WP 0197 00).
3. Verify no faults found.

BY

1. Has speedometer cable flexible core been serviced?

NO →

BYN

1. Service speedometer cable flexible core (WP 0195 00).
2. Verify no faults found.

YES ↓

B2Y

1. Inspect speedometer cable assembly (1) for damage between speedometer (2) and final drive (3).
2. Is cable assembly free of damage?

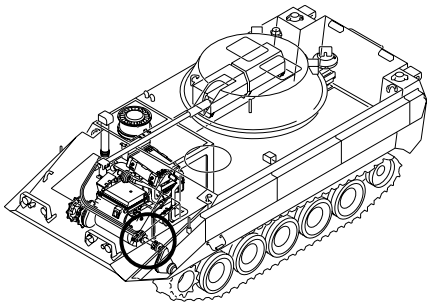

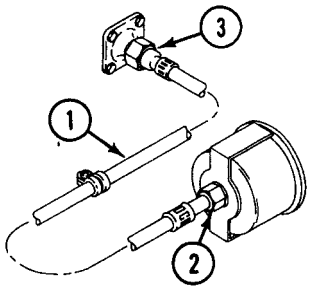

NO →

B2YN

1. Replace speedometer cable assembly (WP 0197 00).
2. Verify no faults found.

YES ↓

B3Y

1. Replace speedometer cable (WP 0197 00).
2. Verify no faults found.

TACHOMETER MALFUNCTIONS 0070 00

INITIAL SETUP:

Maintenance Level

Unit

Tools and Special Tools

General Mechanic's Tool Kit: Automotive (WP 0397 00, Item 64)

Personnel Required

Unit Mechanic 63T10
Helper (H)

References

TM 9-2350-366-10-1
TM 9-2350-366-10-2

Equipment Condition

Engine stopped (TM 9-2350-366-10-1)
Vehicle blocked (TM 9-2350-366-10-1)
Turret rotated to 3200 mils (TM 9-2350-366-10-2)
Engine access cover plate removed (WP 0308 00)
Driver's power plant access panels removed (WP 0312 00)
Front VISMOD access panels removed (WP 0307 00)

T

1. Start engine. See TM 9-2350-366-10-1.
2. Does tachometer fail to give any reading?

NO → GO TO **BY** (PAGE 0070 00-3)

YES

Y

1. Stop engine. See TM 9-2350-366-10-1.
2. Remove tachometer cable (1) from tachometer (2).
3. Start engine. See TM 9-2350-366-10-1.
4. Observe tachometer cable drive tip (3).
5. Does tachometer cable drive tip fail to rotate?

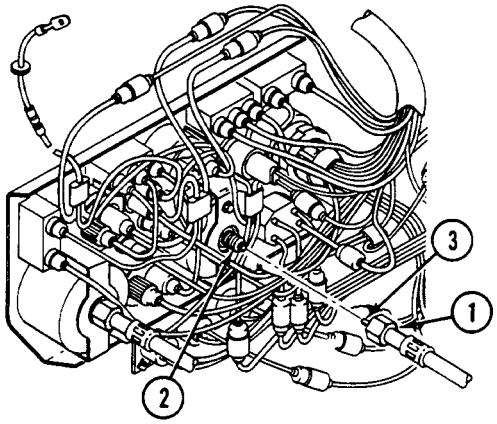

NO

YN

1. Stop engine. See TM 9-2350-366-10-1.
2. Replace tachometer (WP 0199 00).
3. Verify no faults found.

YES

2Y

1. Stop engine. See TM 9-2350-366-10-1.
2. Remove pulse tachometer (WP 0385 00).
3. Manually rotate pulse transducer input (1).
4. Observe pulse transducer output (2).
5. Does output rotate without binding?

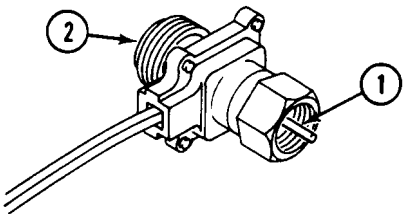

NO →

2YN

1. Install tachometer cable on tachometer.
2. Replace pulse tachometer (WP 0385 00).
3. Verify no faults found.

YES ↓

3Y

1. Remove tachometer adapter (WP 0200 00).
2. Manually rotate tachometer adapter input (1).
3. Observe tachometer adapter output (2).
4. Does output rotate without binding?

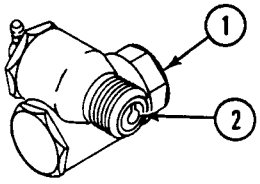

NO →

3YN

1. Replace tachometer adapter (WP 0200 00).
2. Install tachometer cable on tachometer.
3. Verify no faults found.

YES ↓

4Y

1. Install tachometer adapter and pulse tachometer (WP 0200 00) and (WP 0385 00).
2. Replace tachometer cable assembly (WP 0201 00).
3. Verify no faults found.

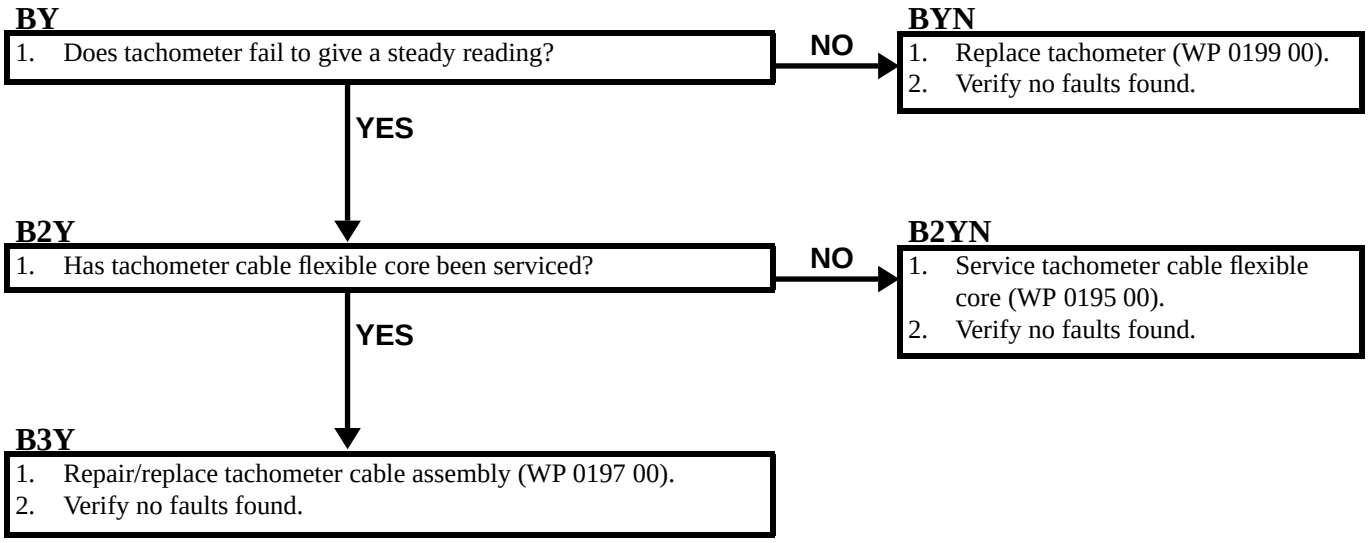
BY
1. Does tachometer fail to give a steady reading?
NO
BYN
1. Replace tachometer (WP 0199 00).
2. Verify no faults found.
YES
B2Y
1. Has tachometer cable flexible core been serviced?
NO
B2YN
1. Service tachometer cable flexible core (WP 0195 00).
2. Verify no faults found.
YES
B3Y
1. Repair/replace tachometer cable assembly (WP 0197 00).
2. Verify no faults found.

HOOK UP/REMOVE STE/ICE TEST SET TO DCA 6 0071 00

THIS WORK PACKAGE COVERS:

Hook up (page 0071 00-1).
Disconnect (page 0071 00-3).

INITIAL SETUP:

Maintenance Level

Unit

Tools and Special Tools

STE/ICE Test Set (WP 0397 00, Item 60)
Electrical Connector Pliers (WP 0397 00, Item 31)

Personnel Required

Unit Mechanic 63T10

References

TM 9-2350-366-10-1
TM 9-4910-571-12&P

Equipment Condition

Engine stopped (TM 9-2350-366-10-1)
Vehicle blocked (TM 9-2350-366-10-1)

HOOK UP

1. REMOVE VTM AND CABLE W1 FROM TRANSIT CASE.
2. PULL VTM CIRCUIT BREAKER TO OFF.
3. INSTALL PLUG W1 P1 (1) ON VTM JACK J1 (2).

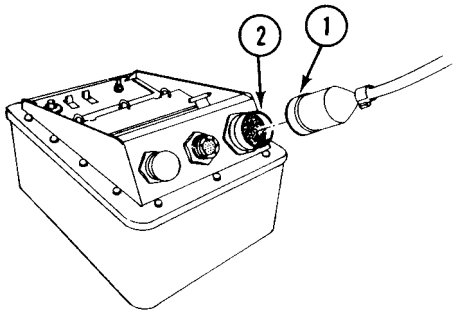

4. REMOVE CAP (3) FROM DCA 6 J2 (5).

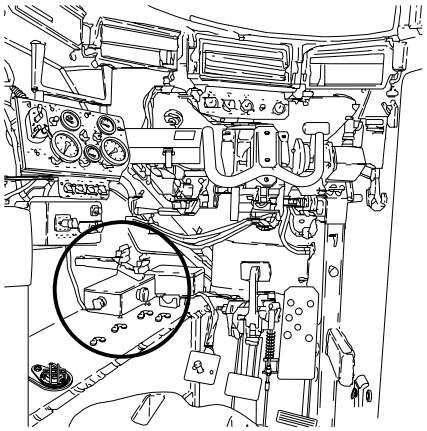

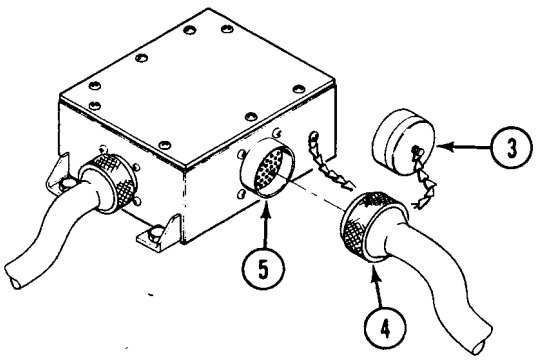

HOOK UP/REMOVE STE/ICE TEST SET TO DCA 6—Continued **0071 00**

5. INSTALL PLUG W1 P2 (4) ON DCA 6 J2 (5).

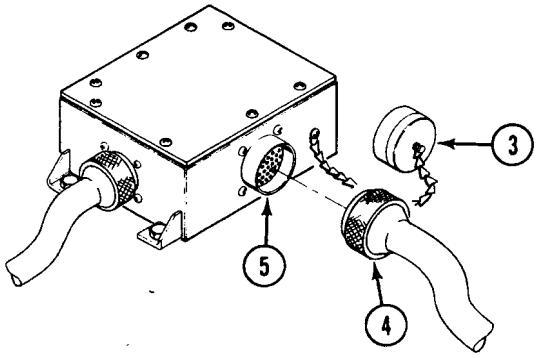

6. PUSH VTM CIRCUIT BREAKER TO ON.
   a. If display reads **(8888)** and **(- - - -)**, go to Step 7.
   b. If display is not blank, but does not read **(8888)** and **(- - - -)**, write up DA form 2404 on faulty VTM display. Notify supervisor.
   c. If display is blank, go to VTM blank display diagnostic troubleshooting (Step WP 0088 00).
7. PERFORM VTM CONFIDENCE CHECK TM 9-4910-571-12&P. IF VTM CONFIDENCE CHECK DOES NOT PASS, GO TO STE/ICE CONFIDENCE TEST DIAGNOSTIC TROUBLESHOOTING (Step WP 0089 00).
8. SELECT TEST 60, THEN PRESS AND RELEASE TEST BUTTON.
9. ENTER VEHICLE I.D. **(26)** INTO VTM, THEN PRESS AND RELEASE TEST BUTTON.
10. SELECT TEST 61, THEN PRESS AND RELEASE TEST BUTTON. IF VEHICLE I.D. **(26)** DOES NOT APPEAR ON VTM DISPLAY, SEE TM 9-4910-571-12&P.
11. SELECT TEST 62, THEN PRESS AND RELEASE TEST BUTTON. IF DCA TO WHICH VTM IS CONNECTED DOES NOT APPEAR ON VTM DISPLAY, SEE TM 9-4910-571-12&P.
12. RETURN TO TROUBLESHOOTING.

DISCONNECT

1. PULL VTM CIRCUIT BREAKER TO OFF.
2. TURN MASTER SWITCH TO OFF.
3. REMOVE W1 CABLE (1) FROM VTM JACK J1 (2) AND REMOVE PLUG W1 P2 (4) FROM DCA 6 J2 (5).

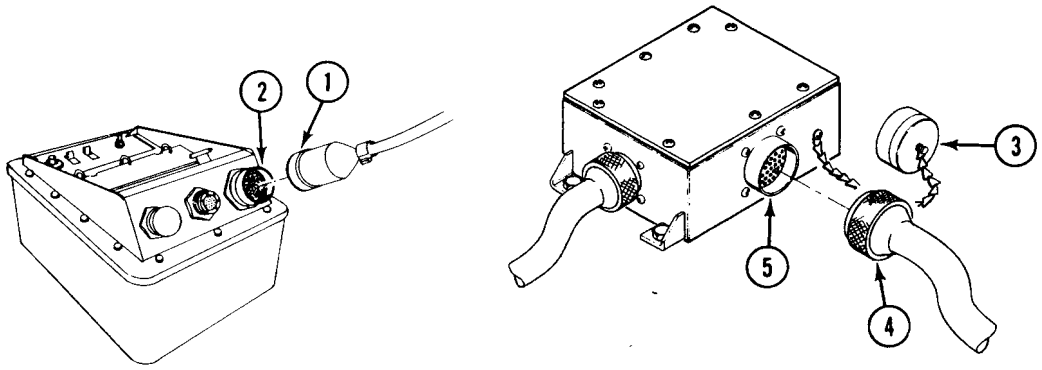

4. INSTALL CAP (3) ON DCA 6 J2 (5).
5. STOW VTM AND CABLE W1 IN TRANSIT CASE.

STE/ICE TEST 10 ENGINE RPM 0072 00

THIS WORK PACKAGE COVERS:

Test (page 0072 00-1).

INITIAL SETUP:

Maintenance Level

Unit

Personnel Required

Unit Mech 63T10

References

TM 9-2350-366-10
TM 9-4910-571-12&P

Equipment Condition

Engine stopped (TM 9-2350-366-10)
Vehicle blocked (TM 9-2350-366-10)
STE/ICE hooked up to DCA 6 (WP 0071 00)

TEST

1. SELECT TEST 10.
2. PRESS AND RELEASE TEST BUTTON.
3. VTM WILL DISPLAY ENGINE RPM:

Condition	Engine RPM
Cranking	100 Minimum
Idle	600-700
Governed speed (no load)	2900-3050

   a. If error message appears, see TM 9-4910-571-12&P.
   b. If display is erratic or reads 0 with engine turning, go to: STE/ICE Test 10 Diagnostic Troubleshooting (WP 0090 00).

4. RETURN TO TROUBLESHOOTING.

STE/ICE TEST 24 FUEL SUPPLY PRESSURE 0073 00

THIS WORK PACKAGE COVERS:

Test (page 0073 00-1).

INITIAL SETUP:

Maintenance Level

Unit

Personnel Required

Unit Mech 63T10

References

TM 9-2350-366-10
TM 9-4910-571-12&P

Equipment Condition

Engine stopped (TM 9-2350-366-10-1)
Vehicle blocked (TM 9-2350-366-10-1)
STE/ICE hooked up to DCA 6 (WP 0071 00)

TEST

1. SELECT TEST 24.
2. PERFORM OFFSET TEST.
   a. Push and hold TEST button until **CAL** appears. Release TEST button.
   b. If VTM reads between **-10** and **+10**, offset test passes.
   c. If offset test fails, go to: STE/ICE Test 24 Diagnostic Troubleshooting (WP 0114 00).
3. PRESS AND RELEASE TEST BUTTON.
4. START ENGINE AND RUN AT GOVERNED NO LOAD SPEED (WP 0104 00, step 4).
   a. If VTM reads 55 (psi) or more, test passes.
   b. If error message appears, see TM 9-4910-571-12&P.
   c. If readings are erratic or cannot be obtained, go to: STE/ICE Test 24 Diagnostic Troubleshooting (WP 0114 00).
5. STOP ENGINE TM 9-2350-366-10-1.
6. RETURN TO TROUBLESHOOTING.

STE/ICE TEST 25 FUEL RETURN PRESSURE 0074 00

THIS WORK PACKAGE COVERS:

Test (page 0074 00-1).

INITIAL SETUP:

Maintenance Level

Unit

Personnel Required

Unit Mech 63T10

References

TM 9-2350-366-10
TM 9-4910-571-12&P

Equipment Condition

Engine stopped (TM 9-2350-366-10)
Vehicle blocked (TM 9-2350-366-10)
STE/ICE hooked up to DCA 6 (WP 0071 00)

TEST

1. SELECT TEST 25.
2. PERFORM OFFSET TEST.
   a. Push and hold TEST button until **CAL** appears. Release TEST button.
   b. If VTM reads between **-10** and **+10**, offset test passes.
   c. If offset test fails, go to: STE/ICE Test 25 Diagnostic Troubleshooting (WP 0116 00).
3. PRESS AND RELEASE TEST BUTTON.
4. START ENGINE AND RUN AT GOVERNED NO LOAD SPEED (WP 0104 00, step 4).
   a. If VTM reads 18 (psi) or more, test passes.
   b. If error message appears, see TM 9-4910-571-12&P.
   c. If readings are erratic or cannot be obtained, go to: STE/ICE Test 25 Diagnostic Troubleshooting (WP 0116 00).
5. STOP ENGINE TM 9-2350-366-10.
6. RETURN TO TROUBLESHOOTING.

STE/ICE TEST 32 AIR BOX PRESSURE 0075 00

THIS WORK PACKAGE COVERS:

Test (page 0075 00-1).

INITIAL SETUP:

Maintenance Level

Unit

Personnel Required

Unit Mech 63T10

References

TM 9-2350-366-10-1
TM 9-4910-571-12&P

Equipment Condition

Engine stopped (TM 9-2350-366-10-1)
Vehicle blocked (TM 9-2350-366-10-1)
STE/ICE hooked up to DCA 6 (WP 0071 00)

TEST

1. SELECT TEST 32.
2. PERFORM OFFSET TEST.
   a. Press and hold TEST button until **CAL** appears. Release TEST button.
   b. If VTM reads between **-3** to **+3**, offset test passes.
   c. If offset test fails, go to: STE/ICE Test 32 Diagnostic Troubleshooting (WP 0130 00).
3. PRESS AND RELEASE TEST BUTTON.
4. START ENGINE TM 9-2350-366-10-1.
5. ACCELERATE ENGINE TO GOVERNED NO LOAD SPEED (WP 0104 00, step 4). RECORD READING.
   a. If VTM reads **6.0** or more at no load governed RPM, test passes.
   b. If error message appears, see TM 9-4910-571-12&P.
   c. If readings are erratic or cannot be obtained, go to: STE/ICE Test 32 Diagnostic Troubleshooting (WP 0131 00).
6. STOP ENGINE TM 9-2350-366-10-1.
7. RETURN TO TROUBLESHOOTING.

STE/ICE TEST 67 BATTERY VOLTAGE 0076 00

THIS WORK PACKAGE COVERS:

Test (page 0076 00-1).

INITIAL SETUP:

Maintenance Level

Unit

Personnel Required

Unit Mech 63T10

References

TM 9-2350-366-10-1
TM 9-4910-571-12&P

Equipment Condition

Engine stopped (TM 9-2350-366-10-1)
Vehicle blocked (TM 9-2350-366-10-1)
STE/ICE hooked up to DCA 6 (WP 0071 00)

TEST

1. SELECT TEST 67.
2. PRESS AND RELEASE TEST BUTTON.

Conditions	Volts
Engine off/MASTER SWITCH OFF	21 or more
Cranking engine fuel off	17 or more
Charging 1100-1300 RPM/service lights on	26 to 29.5

   a. If display is erratic or shows 0 (volts), go to: STE/ICE DCA Battery Voltage Diagnostic Troubleshooting (WP 0091 00).

   b. If error message appears, see TM 9-4910-571-12&P.

3. RETURN TO TROUBLESHOOTING.

STE/ICE TEST 68 STARTER MOTOR VOLTAGE 0077 00

THIS WORK PACKAGE COVERS:

Test (page 0077 00-1).

INITIAL SETUP:

Maintenance Level

Unit

Personnel Required

Unit Mech 63T10

References

TM 9-2350-366-10-1
TM 9-4910-571-12&P

Equipment Condition

Engine stopped (TM 9-2350-366-10-1)
Vehicle blocked (TM 9-2350-366-10-1)
STE/ICE hooked up to DCA 6 (WP 0071 00)

TEST

1. SELECT TEST 68.
2. PRESS AND RELEASE TEST BUTTON.
3. TURN MASTER SWITCH ON.
4. PRESS START SWITCH FOR 3 SECONDS AND OBSERVE VTM READING.
   a. If display reads 16 (volts) or more, test passes.
   b. If error message appears, see TM 9-4910-571-12&P.
   c. If starter cranks normally, but no reading appears, go to: STE/ICE Test 68 Diagnostic Troubleshooting (WP 0096 00).
5. TURN MASTER SWITCH OFF.
6. RETURN TO TROUBLESHOOTING.

STE/ICE TEST 69 STARTER NEGATIVE CABLE VOLTAGE DROP 0078 00

THIS WORK PACKAGE COVERS:

Test (page 0078 00-1).

INITIAL SETUP:

Maintenance Level

Unit

Personnel Required

Unit Mech 63T10

References

TM 9-2350-366-10-1
TM 9-4910-571-12&P

Equipment Condition

Engine stopped (TM 9-2350-366-10-1)
Vehicle blocked (TM 9-2350-366-10-1)
STE/ICE hooked up to DCA 6 (WP 0071 00)

TEST

1. SELECT TEST 69.
2. PRESS AND RELEASE TEST BUTTON.
3. TURN MASTER SWITCH ON.
4. PRESS START SWITCH FOR 3 SECONDS AND OBSERVE VTM READING.
   a. If display reads .60 (volts) or less, test passes.
   b. If error message appears, see TM 9-4910-571-12&P.
   c. If engine cranks normally, but reading is erratic or cannot be obtained, go to: STE/ICE Test 69 Diagnostic Troubleshooting (WP 0097 00).
5. TURN MASTER SWITCH OFF.
6. RETURN TO TROUBLESHOOTING.

STE/ICE TEST 70 STARTER SOLENOID VOLTAGE 0079 00

THIS WORK PACKAGE COVERS:

Test (page 0079 00-1).

INITIAL SETUP:

Maintenance Level

Unit

Personnel Required

Unit Mech 63T10

References

TM 9-2350-366-10-1
TM 9-4910-571-12&P

Equipment Condition

Engine stopped (TM 9-2350-366-10-1)
Vehicle blocked (TM 9-2350-366-10-1)
STE/ICE hooked up to DCA 6 (WP 0071 00)

TEST

1. SELECT TEST 70.
2. PRESS AND RELEASE TEST BUTTON.
3. TURN MASTER SWITCH ON.
4. PRESS START SWITCH FOR 3 SECONDS AND OBSERVE VTM READING.
   a. If display reads 16 (volts) or more, test passes.
   b. If error message appears, see TM 9-4910-571-12&P.
   c. If engine cranks normally, but reading is erratic or cannot be obtained, go to: STE/ICE Test 70 Diagnostic Troubleshooting (WP 0098 00).
5. TURN MASTER SWITCH OFF.
6. RETURN TO TROUBLESHOOTING.

STE/ICE TEST 71 STARTER CURRENT (AVERAGE) 0080 00

THIS WORK PACKAGE COVERS:

Test (page 0080 00-1).

INITIAL SETUP:

Maintenance Level

Unit

Personnel Required

Unit Mech 63T10

References

TM 9-2350-291-10-1
TM 9-4910-571-12&P

Equipment Condition

Engine stopped (TM 9-2350-366-10-1)
Vehicle blocked (TM 9-2350-366-10-1)
STE/ICE hooked up to DCA 6 (WP 0071 00)

TEST

1. SELECT TEST 71.
2. PERFORM OFFSET TEST.
   a. Press TEST button until display reads **CAL**. Release TEST button.
   b. If VTM reads between **–250** and **+250**, offset test passes.
   c. If offset test fails, go to STE/ICE DCA current shunt diagnostic troubleshooting (WP 0092 00).
3. PRESS AND RELEASE TEST BUTTON.
4. CRANK ENGINE FOR FIVE SECONDS AND NOTE STEADY READING.
   a. If VTM reads between **200** and **490**, test passes.
   b. If error message appears, see TM 9-4910-571-12&P.
   c. If no reading appears and engine cranks normally, go to STE/ICE DCA current shunt diagnostic troubleshooting (WP 0092 00).
5. RETURN TO TROUBLESHOOTING.

STE/ICE TEST 72 STARTER CURRENT (FIRST PEAK) 0081 00

THIS WORK PACKAGE COVERS:

Test (page 0081 00-1).

INITIAL SETUP:

Maintenance Level

Unit

Personnel Required

Unit Mech 63T10

References

TM 9-2350-366-10-1
TM 9-4910-571-12&P

Equipment Condition

Engine stopped (TM 9-2350-366-10-1)
Vehicle blocked (TM 9-2350-366-10-1)
Fuel shut off (TM 9-2350-366-10-1)
STE/ICE hooked up to DCA 6 (WP 0071 00)

TEST

1. SELECT TEST 72.
2. PERFORM OFFSET TEST.
   a. Press and hold TEST button until **CAL** appears. Release TEST button.
   b. If VTM reads between **-250** and **+250**, offset test passes.
   c. If offset test fails, go to STE/ICE DCA current shunt diagnostic troubleshooting (WP 0092 00).
3. PRESS AND RELEASE TEST BUTTON.
4. CRANK ENGINE FOR ONE SECOND AND NOTE READING DISPLAYED ON VTM.
   a. If VTM reads between **900 - 1540**, test passes.
   b. If error message appears, see TM 9-4910-571-12&P.
   c. If no reading appears and engine cranks normally, go to STE/ICE DCA current shunt diagnostic troubleshooting (WP 0092 00).
5. RETURN TO TROUBLESHOOTING.

STE/ICE TEST 73 BATTERY RESISTANCE AND STE/ICE TEST 75 BATTERY RESISTANCE CHANGE (PACK) 0082 00

THIS WORK PACKAGE COVERS:

Test (page 0082 00-1).

INITIAL SETUP:

Maintenance Level

Unit

Personnel Required

Unit Mech 63T10

References

TM 9-2350-366-10-1
TM 9-4910-571-12&P

Equipment Condition

Engine stopped (TM 9-2350-366-10-1)
Vehicle blocked (TM 9-2350-366-10-1)
All electrical accessories turned off (TM 9-2350-366-10)
Fuel OFF, engine must not start (TM 9-2350-366-10)
STE/ICE hooked up to DCA 6 (WP 0071 00)

TEST

NOTE

Both TEST 73 and TEST 75 must be performed to determine battery pack condition.

1. SELECT TEST 73.
2. PERFORM OFFSET TEST.
   a. Press and hold TEST button until **CAL** appears. Release TEST button.
   b. If VTM reads between **-250** and **+250**, offset test passes.
   c. If offset test fails, go to STE/ICE DCA current shunt diagnostic troubleshooting (WP 0092 00).
3. PRESS AND RELEASE TEST BUTTON.
   a. If VTM display is erratic or cannot be obtained, go to STE/ICE DCA battery voltage diagnostic troubleshooting (WP 0042 00).
   b. If fault cannot be corrected in (WP 0091 00), go to STE/ICE DCA current shunt diagnostic troubleshooting (WP 0092 00).
4. WHEN **GO** APPEARS, CRANK ENGINE OVER FOR TWO SECONDS OR UNTIL ONE OF THE FOLLOWING APPEARS ON DISPLAY:

Display	Perform/Result
OFF	Stop cranking and wait for message to appear.
A number	BATTERY RESISTANCE Step 5 page 0082 00-1
.9.9.9.9	Beyond range of VTM, cannot be measured
Error message	See TM 9-4910-571-12&P
(—)	VTM lost power during test. Batteries may be too weak. Try powering VTM using external source.

5. OBSERVE VTM READING.
   a. If VTM reading is 30 (milliohms) or less, test passes.
   b. If VTM reading is 30 (milliohms) or more, test fails.
6. SELECT TEST 75.
7. REPEAT STEPS (Steps 2 page 0082 00-0 - 5 page 0082 00-1).
8. DETERMINE CONDITION OF BATTERY PACK USING TABLE.

Test 73 Battery Internal Resistance Test Result	Test 75 Battery Resistance Change Test Result	Battery Pack Condition
PASS	PASS	The batteries tested are OK and in good state of charge.
PASS	FAIL	The batteries tested are in poor condition, but have a fresh charge.
FAIL	PASS	The batteries tested are OK but need to be recharged.
FAIL	FAIL	The batteries tested are in poor condition and in a state of discharge.

   a. If batteries are in poor condition, go to individual battery tests 77 and 79. See TM 9-4910-571-12&P.

STE/ICE TEST 74 STARTER CIRCUIT RESISTANCE 0083 00

THIS WORK PACKAGE COVERS:

Test (page 0083 00-1).

INITIAL SETUP:

Maintenance Level
Unit

Personnel Required
Unit Mech 63T10

References
TM 9-2350-366-10-1
TM 9-4910-571-12&P

Equipment Condition
Engine stopped (TM 9-2350-366-10-1)
Vehicle blocked (TM 9-2350-366-10-1)
All electrical accessories turned off (TM 9-2350-366-10-1)
Fuel OFF, engine must not start (TM 9-2350-366-10-1)
STE/ICE hooked up to DCA 6 (WP 0071 00)

TEST

1. SELECT TEST 74.
2. PERFORM OFFSET TEST.
   a. Press an hold TEST button until **CAL** appears. Release TEST button.
   b. If VTM reads between **–250** and **+250**, offset test passes.
   c. If offset test fails, go to STE/ICE DCA current shunt diagnostic troubleshooting (WP 0092 00).
3. PRESS AND RELEASE TEST BUTTON.
4. WHEN **GO** APPEARS, TURN MASTER SWITCH TO ON AND CRANK ENGINE FOR FIVE SECONDS OR UNTIL ONE OF THE FOLLOWING APPEARS ON THE VTM:

Display	Perform/Result
OFF	Stop cranking and wait for message to appear.
A number	CIRCUIT RESISTANCE (in milliohm)
.9.9.9.9	Beyond range of VTM, cannot be measured
Error message	See TM 9-4910-571-12&P

5. TURN MASTER SWITCH TO OFF.
6. OBSERVE VTM READING.
   a. If VTM reads 30 (milliohm) or less, test passes.
   b. If reading is erratic or cannot be obtained, go to STE/ICE DCA battery voltage diagnostic troubleshooting (WP 0091 00) and STE/ICE DCA current shunt diagnostic troubleshooting (WP 0092 00).
7. RETURN TO TROUBLESHOOTING.

STE/ICE TEST 80 BATTERY CURRENT 0084 00

THIS WORK PACKAGE COVERS:

Test (page 0084 00-1).

INITIAL SETUP:

Maintenance Level

Unit

Tools and Special Tools

Electrical connector pliers (WP 0401 00, Item 31)

Personnel Required

Unit Mech 63T10

References

TM 9-2350-366-10
TM 9-4910-571-12&P

Equipment Condition

Engine stopped (TM 9-2350-366-10-1)
Vehicle blocked (TM 9-2350-366-10-1)
All electrical accessories turned off (TM 9-2350-366-10-1)
STE/ICE hooked up to DCA 6 (WP 0071 00)

TEST

1. SELECT TEST 80.
2. PERFORM OFFSET TEST.
   a. Press TEST button until **CAL** appears. Release TEST button.
   b. If VTM reads between **–250** and **+250**, offset test passes.
   c. If offset test fails, go to STE/ICE DCA current shunt diagnostic troubleshooting (WP 0092 00).
3. PRESS AND RELEASE TEST BUTTON.
4. TURN MASTER SWITCH TO ON.
5. DEPRESS START BUTTON FOR FIVE SECONDS.
   a. If VTM reads **0.0** or less (a larger negative number), test passes.
   b. If error message appears, see TM 9-4910-571-12&P.
   c. If engine cranks normally, but reading is erratic or cannot be obtained, go to STE/ICE DCA current shunt diagnostic troubleshooting (WP 0092 00).
6. TURN MASTER SWITCH TO OFF.
7. RETURN TO TROUBLESHOOTING.

STE/ICE TEST 82 GENERATOR OUTPUT VOLTAGE 0085 00

THIS WORK PACKAGE COVERS:

Test (page 0085 00-1).

INITIAL SETUP:

Maintenance Level

Unit

Personnel Required

Unit Mech 63T10

References

TM 9-2350-366-10-1
TM 9-4910-571-12&P

Equipment Condition

Engine stopped (TM 9-2350-366-10)
Vehicle blocked (TM 9-2350-366-10)
STE/ICE hooked up to DCA 6 (WP 0071 00)

TEST

1. SELECT TEST 82
2. START ENGINE AND RUN AT 1400-1600 RPM. See TM 9-2350-366-10-1.
3. TURN MASTER LIGHT SWITCH TO SERV DRIVE.
4. PRESS AND RELEASE TEST BUTTON ON VTM
5. OBSERVE VTM READING.
   a. If VTM reads between **26** to **29.5** (volts), test passes.
   b. If error message appears, see TM 9-4910-571-12&P.
   c. If reading is erratic or cannot be obtained, go to STE/ICE test 82 diagnostic troubleshooting (WP 0099 00).
6. STOP ENGINE. See TM 9-2350-366-10-1.
7. TURN MASTER LIGHT SWITCH TO OFF.
8. RETURN TO TROUBLESHOOTING.

STE/ICE TEST 83 GENERATOR FIELD VOLTAGE 0086 00

THIS WORK PACKAGE COVERS:

Test (page 0086 00-1).

INITIAL SETUP:

Maintenance Level

Unit

Personnel Required

Unit Mech 63T10

References

TM 9-2350-366-10-1
TM 9-4910-571-12&P

Equipment Condition

Engine stopped (TM 9-2350-366-10-1)
Vehicle blocked (TM 9-2350-366-10-1)
STE/ICE hooked up to DCA 6 (WP 0071 00)

TEST

1. SELECT TEST 83.
2. PRESS AND RELEASE TEST BUTTON.
3. START ENGINE AND RUN AT 1400-1600 RPM. SEE TM 9-2350-366-10.
4. OBSERVE VTM DISPLAY.
   a. If VTM reads **26** to **29.5** (volts), test passes.
   b. If error message appears, see TM 9-4910-571-12&P.
   c. If reading is erratic or cannot be obtained, go to STE/ICE test 83 diagnostic troubleshooting (WP 0100 00).
5. STOP ENGINE. See TM 9-2350-366-10-1.
6. RETURN TO TROUBLESHOOTING.

STE/ICE TEST 84 GENERATOR NEGATIVE CABLE VOLTAGE DROP 0087 00

THIS WORK PACKAGE COVERS:

Test (page 0087 00-1).

INITIAL SETUP:

Maintenance Level

Unit

Personnel Required

Unit Mech 63T10

References

TM 9-2350-366-10-1
TM 9-4910-571-12&P

Equipment Condition

Engine stopped (TM 9-2350-366-10)
Vehicle blocked (TM 9-2350-366-10)
STE/ICE hooked up to DCA 6 (WP 0071 00)

TEST

1. SELECT TEST 84.
2. START ENGINE AND RUN AT 1400-1600 RPM. See TM 9-2350-366-10-1.
3. TURN MASTER LIGHT SWITCH TO SER DRIVE.
4. PRESS AND RELEASE TEST BUTTON ON VTM.
5. OBSERVE VTM DISPLAY.
   a. If VTM reads **0.60** (volts) or less, test passes.
   b. If error message appears, see TM 9-4910-571-12&P.
   c. If reading is erratic or cannot be obtained, go to STE/ICE test 84 diagnostic troubleshooting (WP 0101 00).
6. STOP ENGINE. See TM 9-2350-366-10-1.
7. TURN MASTER LIGHT SWITCH TO OFF.
8. RETURN TO TROUBLESHOOTING.

STE/ICE BLANK DISPLAY DIAGNOSTIC TROUBLESHOOTING 0088 00

INITIAL SETUP:

Maintenance Level

Unit

Tools and Special Tools

Electrical connector pliers (WP 0397 00, Item 31)
STE/ICE test set (WP 0397 00, Item 60)

Materials/Parts

Electrical tape (WP 0399 00, Item 37)

Personnel Required

Unit Mechanic 63T10

References

TM 9-2350-366-10-1
TM 9-4910-571-12&P

Equipment Condition

Engine stopped (TM 9-2350-366-10-1)
Vehicle blocked (TM 9-2350-366-10-1)
Driver's power plant access panel removed (WP 0312 00)
Engine access cover plate removed (WP 0308 00)
Front VISMOD panels removed (WP 0307 00)

T

1. Does VTM pass confidence test (WP 0089 00)?

NO →

TN

1. Faulty VTM.
2. Notify supervisor.

YES ↓

Y

1. Set up test 89. See TM 9-4910-571-12&P.
2. Measure voltage between DCA jack J2 (1) socket E+ (2) and F (3).
3. Does VTM read less than 17 volts?

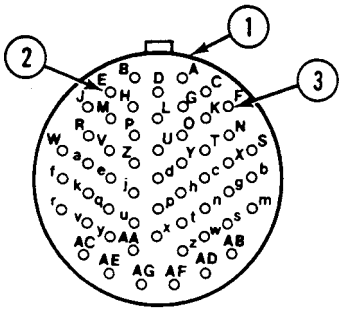

NO →

YN

1. Faulty W1 cable.
2. Notify supervisor.

YES ↓

STE/ICE BLANK DISPLAY DIAGNOSTIC TROUBLESHOOTING—Continued **0088 00**

2Y

1. Remove harness 12354593 plug P1 (1) from STE/ICE distribution box jack J1 (2).
2. Measure voltage between harness 12354593 plug P1 (1) socket A(+) (3) and r (4).
3. Does VTM read less than 17 volts?

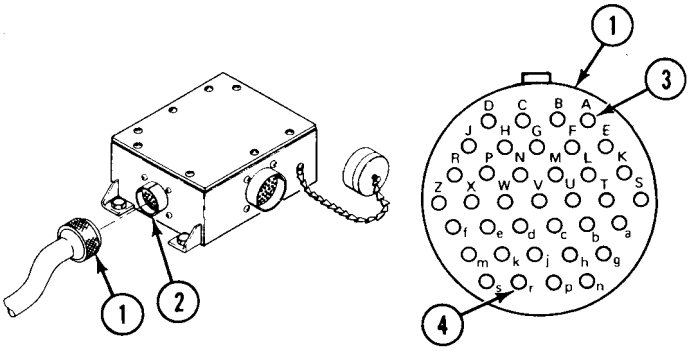

NO

2YN

1. Replace STE/ICE distribution box (WP 0387 00).
2. Verify no faults found.

YES

3Y

1. Inspect harness 12354593 circuit 772 terminal (1) on battery positive.
2. Remove shunt guard (2) and inspect harness 12354593 circuit 770 terminal (3) on current shunt.
3. Are all connections tight, clean, and free from damage?

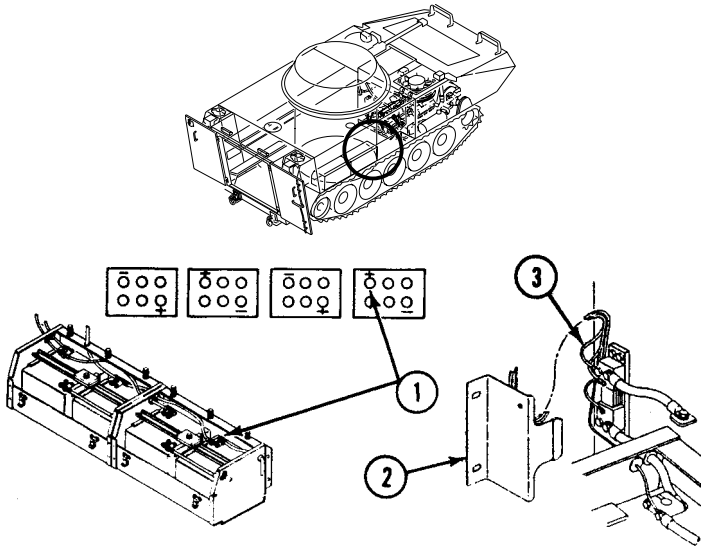

NO

3YN

1. Clean, tighten, or replace parts as necessary. See Table of Contents, Batteries.
2. Verify no faults found.

YES

4Y

1. Replace STE/ICE crew wiring harness (WP 0388 00).
2. Verify no faults found.

STE/ICE CONFIDENCE TEST DIAGNOSTIC TROUBLESHOOTING 0089 00

INITIAL SETUP:

Maintenance Level

Unit

Tools and Special Tools

General mechanic's tool kit: automotive (WP 0397 00, Item 64)
Electrical connector pliers (WP 0397 00, Item 31)
Jumper wire
STE/ICE Test Set (WP 0397 00, Item 60)

Materials/Parts

Electrical tape (WP 0399 00, Item 37)

Personnel Required

Unit Mechanic 63T10

References

TM 9-2350-366-10-1
TM 9-4910-571-12&P

Equipment Condition

Engine stopped (TM 9-2350-366-10-1)
Vehicle blocked (TM 9-2350-366-10-1)
Driver's power plant access panel removed (WP 0312 00)
Engine access cover plate removed (WP 0308 00)
Front VISMOD access panel removed (WP 0307 00)
STE/ICE hooked up to vehicle batteries TM 9-4910-571-12&P

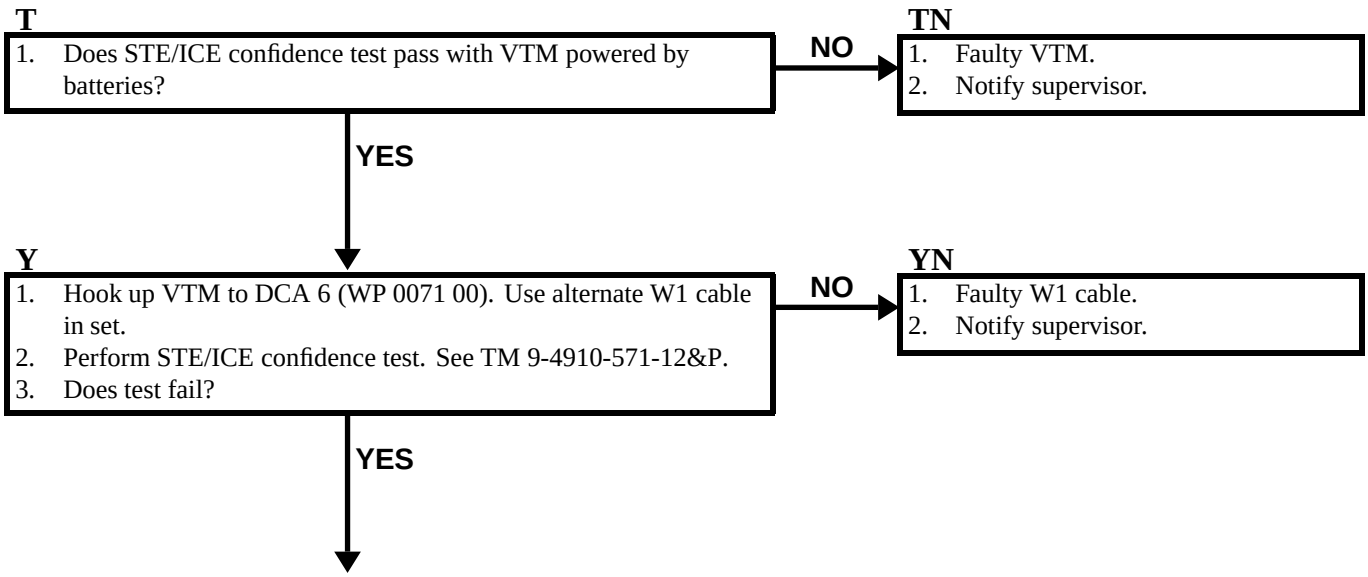

2Y

1. Remove harness 12354672 plug P4 (1) from harness 12354593 jack J1 (2).
2. Perform STE/ICE confidence test. See TM 9-4910-571-12&P.
3. Does test fail?

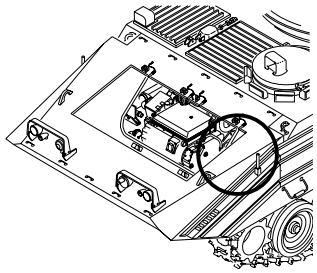

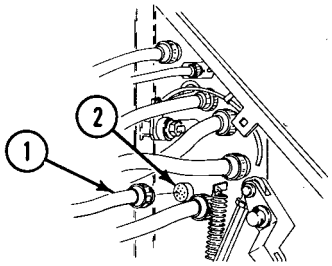

NO → GO TO **BY** (PAGE 0089 00-4)

YES ↓

3Y

1. Remove harness 12354593 plug P1 (1) from STE/ICE distribution box jack J3 (2).
2. Install jumper wire between harness 12354593 plug P1 (1) pin A (3) and STE/ICE distribution box jack J1 (2) pin A (4).
3. Install jumper wire between harness 12354593 plug P1 (1) pin r (5) and STE/ICE distribution box jack J1 (2) pin r (6).
4. Perform STE/ICE confidence test. See TM 9-4910-571-12&P.
5. Does test fail?

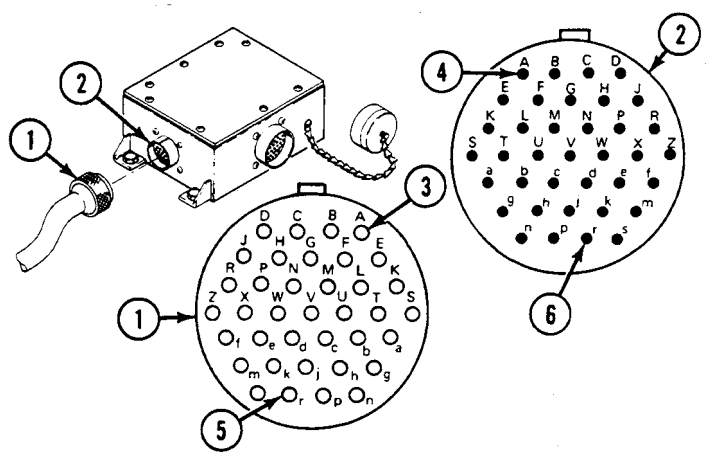

NO →

3YN

1. Faulty harness.
2. Notify supervisor.

YES ↓

4Y

1. Replace STE/ICE distribution box (WP 0387 00).
2. Verify no faults found.

BY

1. Install harness 12354672 plug P4 on harness 12354593 jack J1.
2. Remove harness 12354672 plug P3 (1) from turbo outlet transducer jack (2).
3. Perform STE/ICE confidence test. See TM 9-4910-571-12&P.
4. Does test fail?

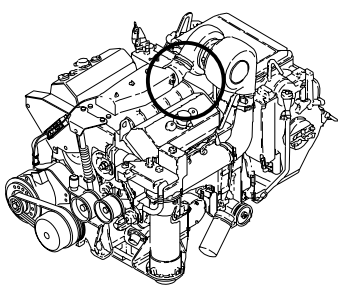

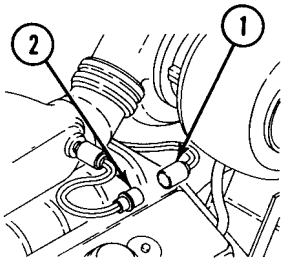

NO →

BYN

1. Replace turbo outlet transducer (WP 0119 00).
2. Verify no faults found.

YES ↓

B2Y

1. Pull VTM circuit breaker to OFF.
2. Install harness 12354672 plug P3 on turbo outlet pressure transducer.
3. Remove harness 12354672 plug P1 (1) from fuel return pressure transducer jack (2).
4. Perform STE/ICE confidence test. See TM 9-4910-571-12&P.
5. Does test fail?

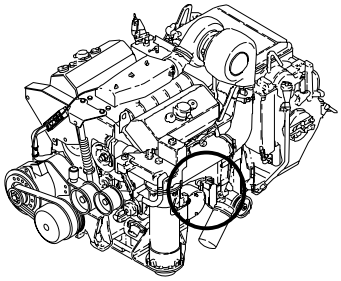

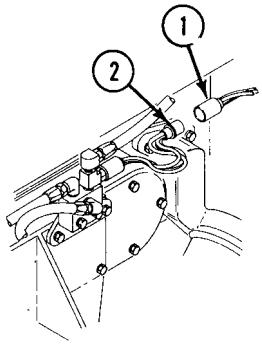

NO →

B2YN

1. Replace fuel return pressure transducer (WP 0118 00).
2. Verify no faults found.

YES ↓

B3Y

1. Pull VTM circuit breaker to OFF.
2. Install harness 12354672 plug P1 on fuel return pressure transducer.
3. Remove harness 12354672 plug P8 (1) on fuel supply pressure transducer jack (2).
4. Perform STE/ICE confidence test. See TM 9-4910-571-12&P.
5. Did test fail?

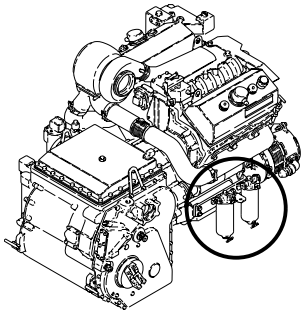

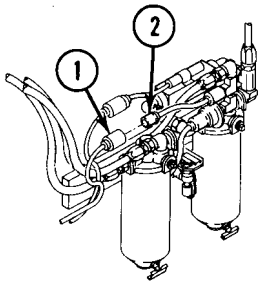

NO →

B3YN

1. Replace fuel supply pressure transducer (WP 0117 00).
2. Verify no faults found.

YES ↓

B4Y

1. Pull VTM circuit breaker to OFF.
2. Install harness 12354672 plug P8 on fuel supply pressure transducer.
3. Remove harness 12354672 plug P9 (1) from air box pressure transducer (2).
4. Perform STE/ICE confidence test. See TM 9-4910-571-12&P.
5. Did test fail?

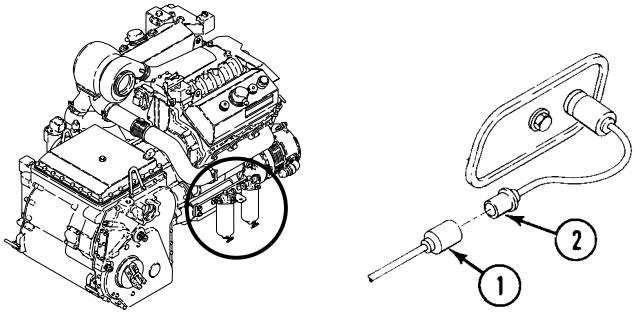

NO

B4YN

1. Replace air box pressure transducer (WP 0120 00).
2. Verify no faults found.

YES

B5Y

1. Repair/replace harness 12354672 (WP 0387 00).
2. Verify no faults found.

STE/ICE TEST 10, 12 AND 13 DIAGNOSTIC TROUBLESHOOTING 0090 00

INITIAL SETUP:

Maintenance Level

Unit

Tools and Special Tools

Electrical connector pliers (WP 0397 00, Item 31)
Jumper wire
STE/ICE Test Set (WP 0397 00, Item 60)

Materials/Parts

Electrical tape (WP 0399 00, Item 37)

Personnel Required

Unit Mechanic 63T10

References

TM 9-2350-366-10-1
TM 9-4910-571-12&P

Equipment Condition

Engine stopped (TM 9-2350-366-10-1)
Vehicle blocked (TM 9-2350-366-10-1)
Engine access cover plate removed (WP 0308 00)
Transmission controller in “SL” (TM 9-2350-366-10-1)
Front VISMOD access panels removed (WP 0307 00)
STE/ICE hooked up to DCA 6 TM 9-4910-571-12&P

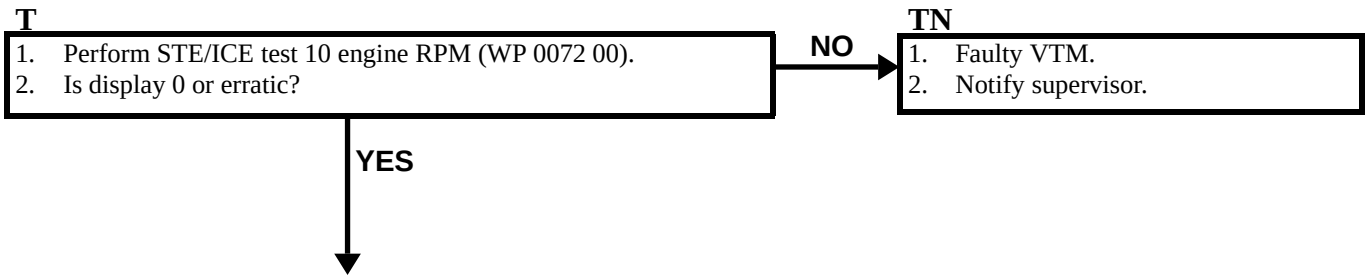

Y

1. Remove plug W1P1 from VTM jack J1.
2. Remove harness 12354672 P2 (1) from pulse transducer (2).
3. Measure resistance between plug W1P1 (3) pins d (4) and c (5).
4. Does VTM read infinity?

NO → GO TO **BY** (PAGE 0090 00-4)

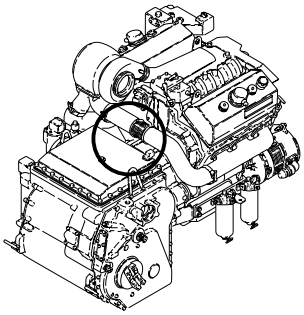

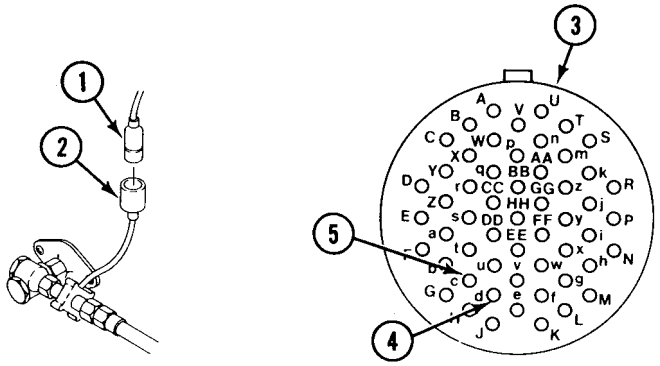

YES

2Y

1. Install jumper wire on harness 12354672 P2 (1) between pins.
2. Measure resistance between plug W1P1 (2) pins d (3) and c (4).
3. Does VTM read 0 ohm?

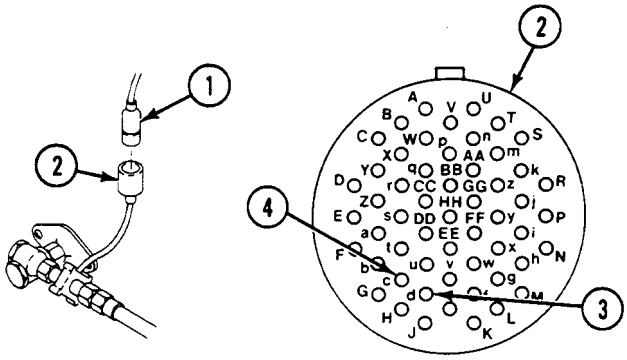

NO → GO TO **CY** (PAGE 0090 00-6)

YES

3Y

1. Replace pulse tachometer (WP 0385 00).
2. Verify no faults found.

STE/ICE TEST 10, 12 AND 13 DIAGNOSTIC TROUBLESHOOTING—Continued 0090 00

BY

1. Remove plug W1P1 (1) from STE/ICE distribution box jack J2 (2).
2. Measure resistance between plug W1P1 (1) pins d (4) and c (5).
3. Does VTM read infinity?

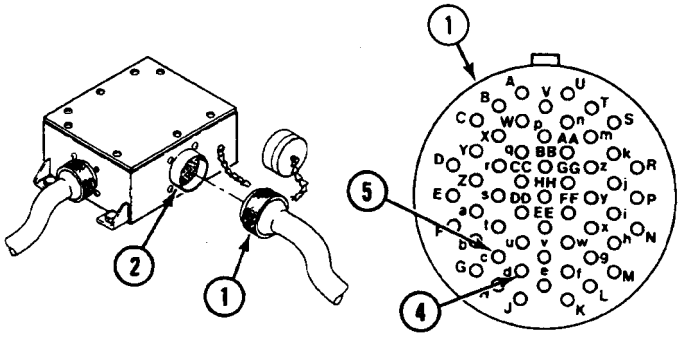

NO →

BYN

1. Faulty W1 cable.
2. Notify supervisor.

YES ↓

B2Y

1. Remove harness 12354672 P4 (1) from jack 12354593 J1 (2) at bulkhead.
2. Measure resistance between harness 12354672 P4 (1) pins X (3) and Y (4).
3. Does VTM read infinity?

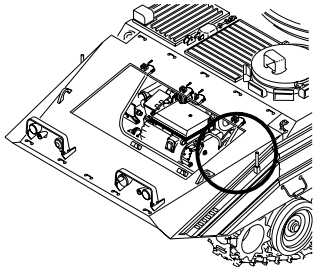

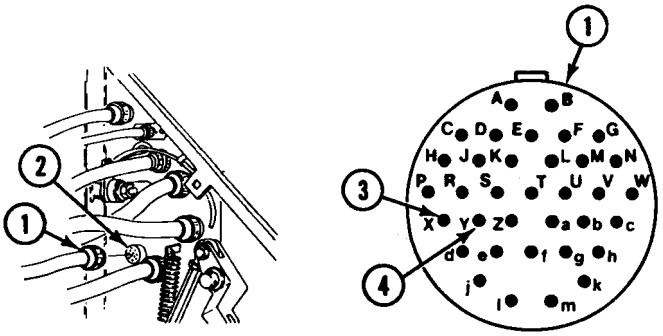

NO →

B2YN

1. Replace harness 12354672 (WP 0389 00).
2. Verify no faults found.

YES ↓

B3Y

1. Remove harness 12354593 P1 (1) STE/ICE distribution box jack J1 (2).
2. Measure resistance between harness 12354593 P1 (1) pins X (3) and R (4).
3. Does VTM read infinity?

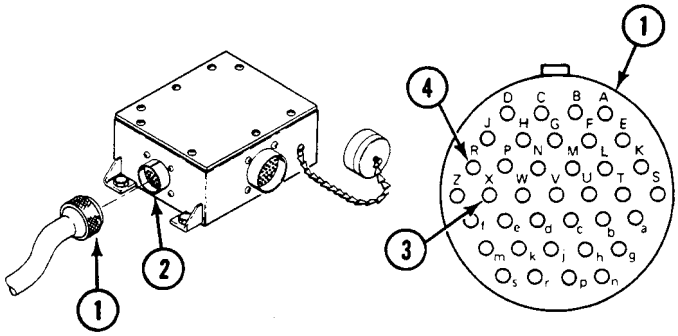

NO

B3YN

1. Replace harness 12354593 WP 0388 00.
2. Verify no faults found.

YES

B4Y

1. Replace STE/ICE distribution box (WP 0387 00).
2. Verify no faults found.

CY

1. Remove plug W1P1 (1) from STE/ICE distribution box jack J2 (2).
2. Measure resistance between STE/ICE distribution box jack J2 (2) pins c (3) and d (4).
3. Does VTM read more than 0 ohm?

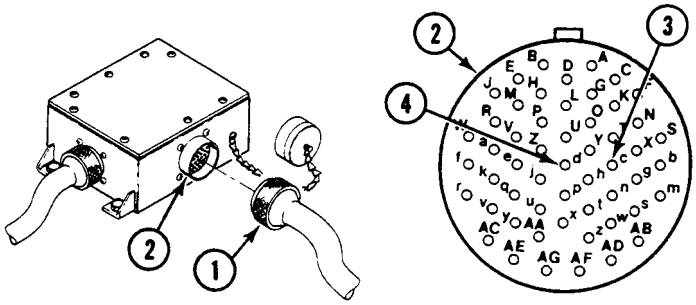

NO

CYN

1. Faulty W1 cable.
2. Notify supervisor.

YES

C2Y

1. Remove harness 12354672 P4 (1) from harness 12354593 J1 (2) at bulkhead.
2. Measure continuity between harness 12354672 P4 (1) pins X (3) and Y (4).
3. Does VTM read 0 ohm?

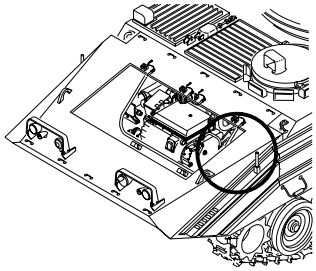

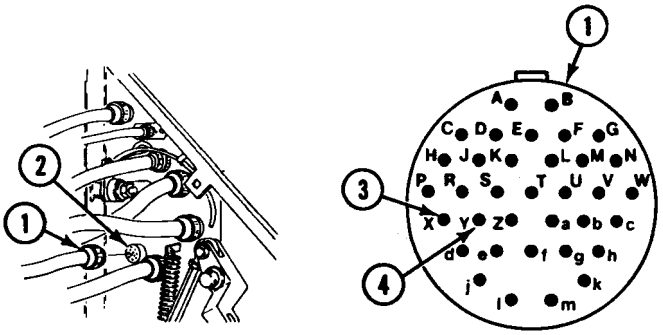

NO

C2YN

1. Repair/replace wiring harness 12354672 (WP 0189 00)(WP 0389 00).
2. Verify no faults found.

YES

C3Y

1. Install harness 12354672 P4 on jack 12354593 J1 at bulkhead.
2. Remove harness 12354593 P1 (1) from STE/ICE distribution box jack J1 (2).
3. Measure resistance between harness 12354593 P1 (1) pins X (3) and R (4).
4. Does VTM read 0 ohm?

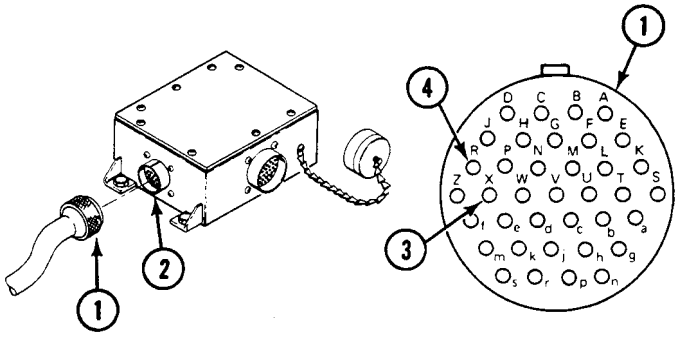

NO

C3YN

1. Replace wiring harness 12354593 (WP 0388 00).
2. Verify no faults found.

YES

C4Y

1. Replace STE/ICE distribution box (WP 0387 00).
2. Verify no faults found.

DCA BATTERY VOLTAGE DIAGNOSTIC TROUBLESHOOTING 0091 00

INITIAL SETUP:

Maintenance Level

Unit

Tools and Special Tools

STE/ICE Test Set (WP 0397 00, Item 60)

Personnel Required

Unit Mechanic 63T10
Helper (H)

References

TM 9-2350-366-10-1
TM 9-4910-571-12&P

Equipment Condition

Engine Stopped TM 9-2350-366-10-1
Vehicle Blocked TM 9-2350-366-10-1
Battery compartment cover opened (TM 9-2350-366-10-1)

T

NOTE

Enter VTM data for tests 14, 67, 73, 74, and 75.

1. Remove plug W1 P1 from VTM jack J1.
2. Hook up VTM to vehicle batteries TM 9-4910-571-12&P.
3. Set up Test 89 TM 9-4910-571-12&P.
4. Measure voltage between battery terminals (1) and (2) with engine cranking for 3 seconds.
5. Does VTM read 17 volts or more?

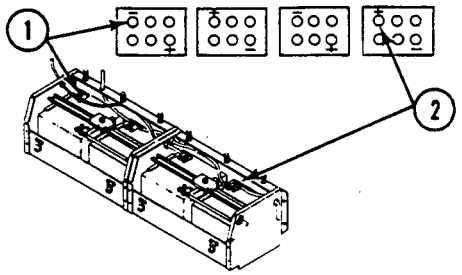

NO →

TN

1. Service vehicle batteries TM 9-2350-366-10-1.
2. Verify no faults found.

YES ↓

DCA BATTERY VOLTAGE DIAGNOSTIC TROUBLESHOOTING—Continued 0091 00

Y

1. Measure voltage between plug W1 P1 (1), pin V (+) (2) and ground. VTM should read 22 volts or more.
2. Set up Test 91 TM 9-4910-571-12&P.
3. Measure voltage between plug W1 P1 (1), pin W (-) (3) and ground. VTM should read 22 volts or more.
4. Does VTM indicate a fault?

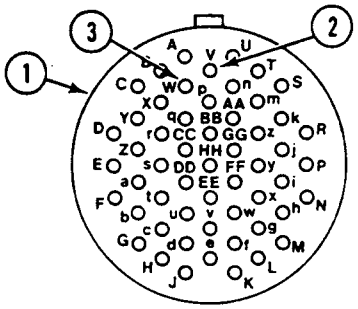

NO

YN

1. Faulty VTM. Beyond unit maintenance repair.
2. Notify supervisor.

YES

2Y

1. Remove plug W1 P2 (1) from STE/ICE distribution box jack J2 (2).
2. Measure voltage between STE/ICE distribution box jack J2 (2), pins V (+) (3) and W (-) (4).
3. Does VTM indicate other than battery voltage?

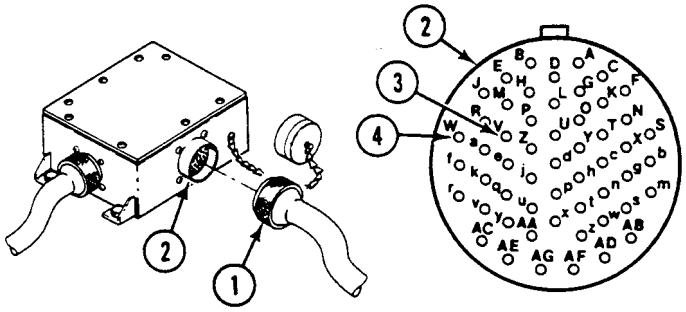

NO

2YN

1. Faulty W1 cable. Beyond unit maintenance repair.
2. Notify supervisor.

YES

3Y

1. Remove harness 12354593 P1 (1) from STE/ICE distribution box jack J1 (2).
2. Measure voltage between 12354593 P1 (1), pins L (+) (3) and k (-) (4).
3. Does VTM indicate other than battery voltage?

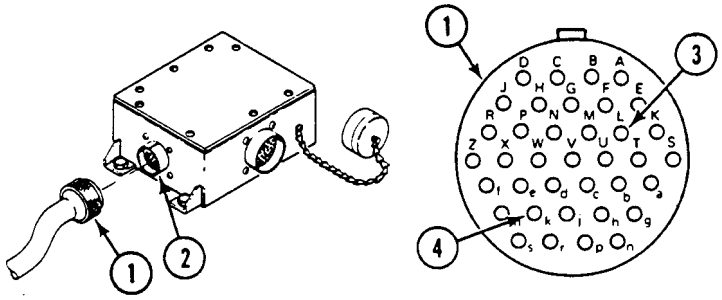

NO →

3YN

1. Replace STE/ICE distribution box (WP 0387 00).
2. Verify no faults found.

YES ↓

4Y

1. Repair/replace wiring harness 12354593 circuit 778 or 779 (WP 0189 00).
2. Verify no faults found.

DCA CURRENT SHUNT DIAGNOSTIC TROUBLESHOOTING 0092 00

INITIAL SETUP:

Maintenance Level
Unit

Tools and Special Tools
Jumper wire
STE/ICE Test Set (WP 0397 00, Item 60)

Personnel Required
Unit Mechanic 63T10

References
TM 9-2350-366-10-1
TM 9-4910-571-12&P

Equipment Condition
Engine stopped (TM 9-2350-366-10-1)
Vehicle blocked (TM 9-2350-366-10-1)

T

NOTE

Enter VTM data for tests 71, 72, 73, 74, 75, and 80.

1. Remove plug W1 P1 from VTM jack J1.
2. Hook up VTM to vehicle batteries TM 9-4910-571-12&P.
3. Set up Test 89 TM 9-4910-571-12&P.
4. Measure resistance between plug W1 P1 (1), sockets X (2) and Y (3).
5. Does VTM read 0 ohms?

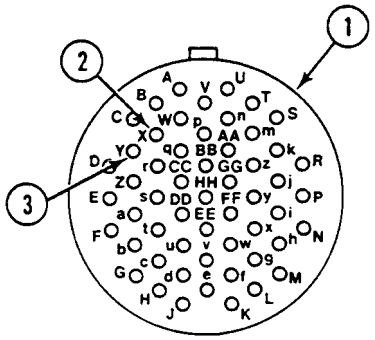

NO → GO TO **BY** (PAGE 0092 00-3)

YES

Y

1. Remove screw (2), lockwasher (3), and harness 12354593 circuit 780 terminal lead E1 (4) from current shunt 1228937 (5).
2. Wrap terminal lead E1 (4) with electrical tape.
3. Measure resistance between plug W1 P1 (6), socket X (7) and Y (8).
4. Does VTM read infinity?

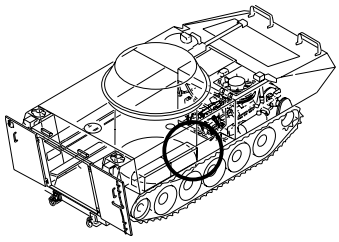

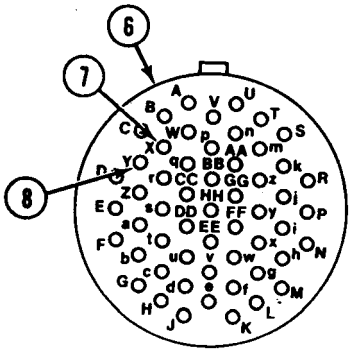

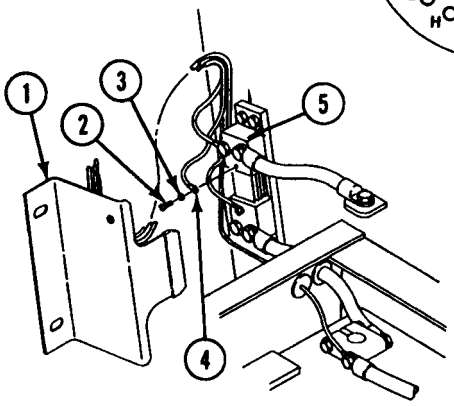

NO → GO TO **CY** (PAGE 0092 00-5)

YES

2Y

1. Faulty VTM.
2. Notify supervisor.

BY

1. Remove plug W1 P1 (1) from STE/ICE distribution box jack J2 (2).
2. Measure resistance between STE/ICE distribution box jack J2 (2), socket X (3) and Y (4).
3. Does VTM read more than one ohm?

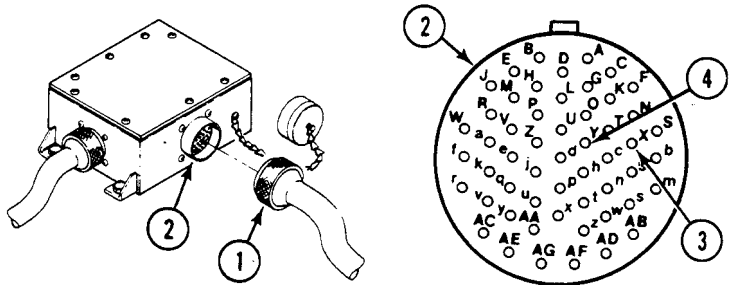

NO

BYN

1. Faulty W1 cable. Beyond unit maintenance repair.
2. Notify supervisor.

YES

B2Y

1. Remove harness 12354593 P1 (1) from STE/ICE distribution box jack J1 (2).
2. Measure resistance between harness 12354593 P1 (1), socket s (3) and m(4).
3. Does VTM read more than one ohm?

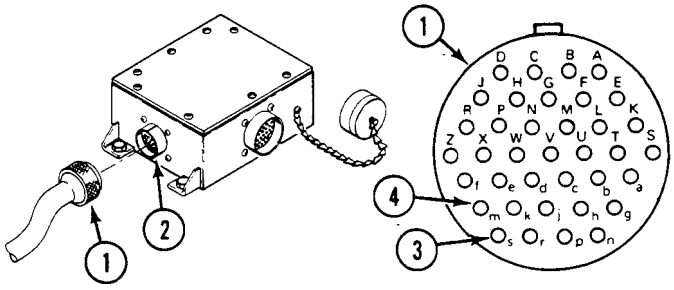

NO

B2YN

1. Replace STE/ICE distribution box (WP 0387 00).
2. Verify no faults found.

YES

DCA CURRENT SHUNT DIAGNOSTIC TROUBLESHOOTING—Continued 0092 00

B3Y

1. Inspect harness 123454593 circuit 780 and 781 terminals (1) on current shunt.
2. Are all connections tight, clean, and free from damage?

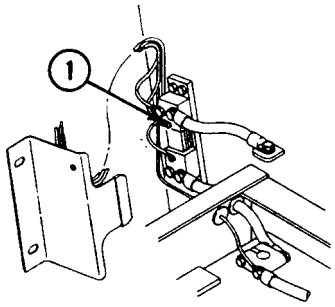

NO →

B3YN

1. Clean, tighten or replace parts as necessary. See Table of Contents, Batteries.
2. Verify no faults found.

YES ↓

B4Y

1. Repair/replace harness 12354593 (WP 0189 00).
2. Verify no faults found.

CY

1. Remove plug W1 P2 (1) from STE/ICE distribution box jack J2 (2).
2. Measure resistance between STE/ICE distribution box jack J2 (2), socket X (3) and Y (4).
3. Does VTM fail to read infinity?

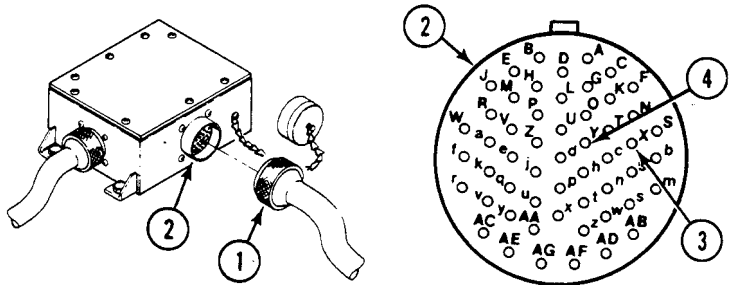

NO →

CYN

1. Faulty W1 cable. Beyond unit maintenance repair.
2. Notify supervisor.

YES ↓

C2Y

1. Remove harness 12354593 P1 (1) from STE/ICE distribution box jack J1 (2).
2. Measure resistance between harness 12354593 P1 (1), socket s (3) and m(4).
3. Does VTM fail to read infinity?

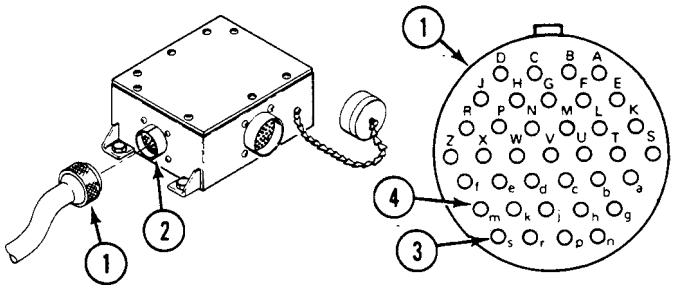

NO →

C2YN

1. Replace STE/ICE distribution box (WP 0387 00).
2. Verify no faults found.

YES ↓

C3Y

1. Repair/replace harness 12354593 (WP 0189 00).
2. Verify no faults found.

STE/ICE TEST 24 FUEL SUPPLY PRESSURE DIAGNOSTIC TROUBLESHOOTING 0093 00

INITIAL SETUP:

Maintenance Level

Unit

Tools and Special Tools

Electrical connector pliers (WP 0397 00, Item 31)
Jumper wire
STE/ICE Test Set (WP 0397 00, Item 60)

Personnel Required

Unit Mechanic 63T10

References

TM 9-2350-366-10-1
TM 9-4910-571-12&P

Equipment Condition

Engine stopped (TM 9-2350-366-10-1)
Vehicle blocked (TM 9-2350-366-10-1)
Engine access cover plate removed (WP 0308 00)
Driver's power plant access panel removed (WP 0312 00)
Front VISMOD access panels removed (WP 0307 00)

T

1. Remove plug W1 P1 from VTM jack J1.
2. Hook up VTM to vehicle batteries. See TM 9-4910-571-12&P.
3. Remove harness 12345672 plug P8 (1) from fuel supply pressure transducer (2).
4. Set up Test 91. See TM 9-4910-571-12&P.
5. Measure resistance between W1 P1 (3), pins v (4) and u (5).
6. Does VTM read infinity?

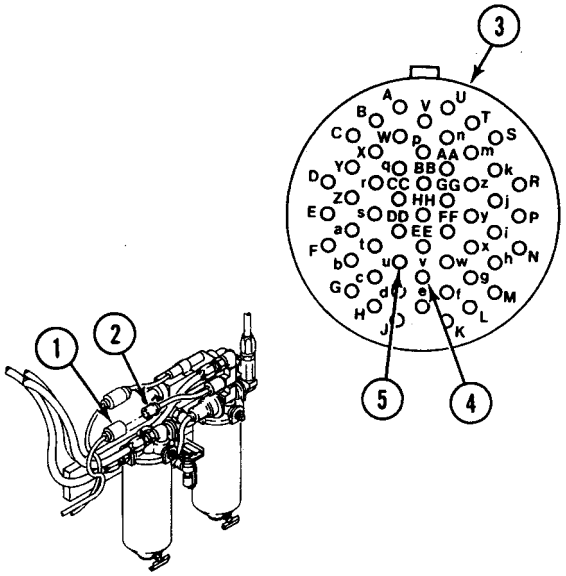

NO → GO TO **BY** (PAGE 0093 00-5)

YES ↓

STE/ICE TEST 24 FUEL SUPPLY PRESSURE DIAGNOSTIC TROUBLESHOOTING—Continued **0093 00**

Y

1. Install jumper wire between harness 12354672 plug P8 (1), pins 3 (2) and 4 (3).
2. Measure resistance between plug W1 P1 (4), pins v (5) and u (6).
3. Does VTM read 0 ohms?

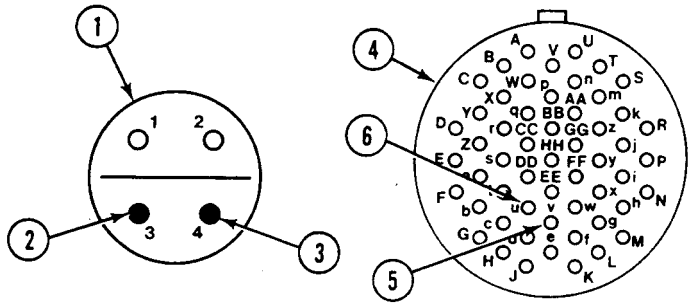

NO → GO TO **CY** (PAGE 0093 00-7)

YES

2Y

1. Remove plug W1 P2 (1) from STE/ICE distribution box jack J2 (2).
2. Measure resistance between the following plug pins:
   W1 P1 (3), pin BB (4) to W1 P2 (1), pin AB (5)
   W1 P1 (3), pin f (6) to W1 P2 (1), pin f (7)
   W1 P1 (3), pin g (8) to W1 P2 (1), pin g (9)
3. Does VTM read 0 ohms for each measurement?

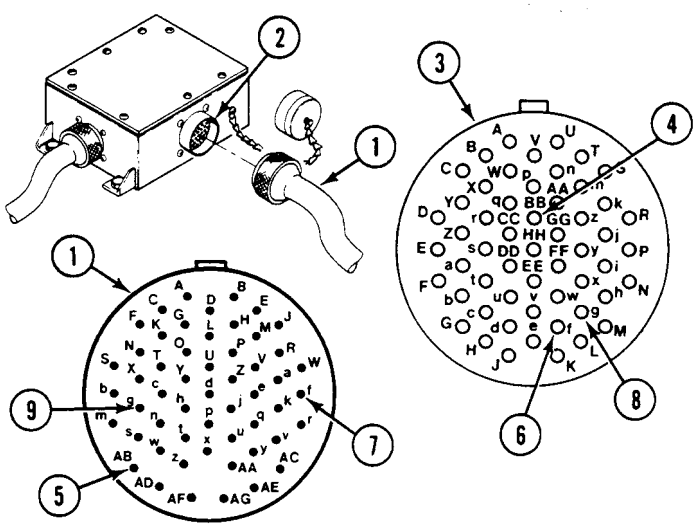

NO → **2YN**

1. Faulty W1 cable. Beyond unit maintenance repair.
2. Notify supervisor.

YES

STE/ICE TEST 24 FUEL SUPPLY PRESSURE DIAGNOSTIC TROUBLESHOOTING—Continued **0093 00**

3Y

1. Remove harness 12354593 P1 (1) from STE/ICE distribution box jack J1 (2).
2. Set up Test 92. See TM 9-4910-571-12&P.
3. Measure resistance between STE/ICE distribution box jack J2 (3), pin AB (4) and the following jack pins:
   - STE/ICE distribution box J2 (3), pin f (7).
   - STE/ICE distribution box J2 (3) pin g (8).
   - STE/ICE distribution box J1 (2), pin N (5).
   - STE/ICE distribution box J1 (2), pin W (6).
4. Does VTM read between 3600 and 4400 ohms for each measurement?

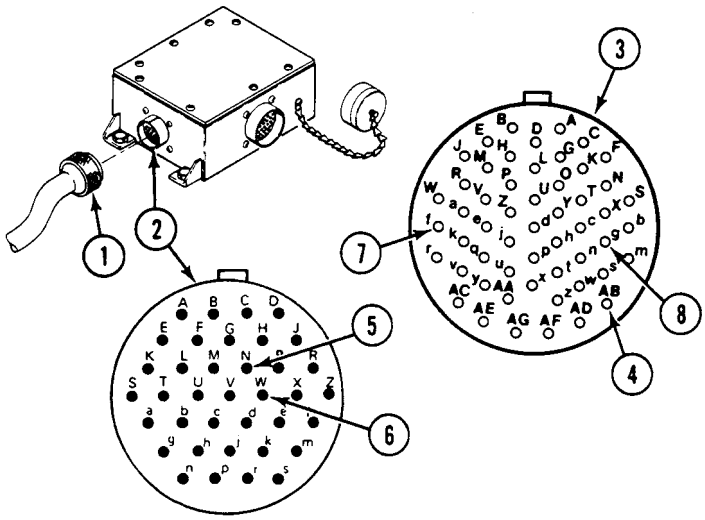

NO → **3YN**

1. Replace STE/ICE distribution box (WP 0387 00).
2. Verify no faults found.

YES

4Y

1. Set up Test 91. See TM 9-4910-571-12&P.
2. Measure resistance between harness 12354593 plug P1 (1), pins N (2) and W (3).
3. Does VTM read infinity?

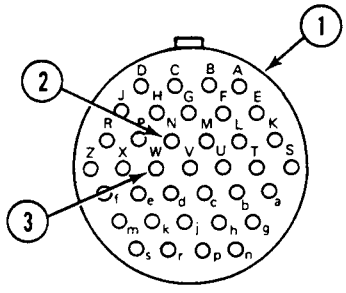

NO → GO TO **DY** (PAGE 0093 00-9)

YES

5Y

1. Move jumper wire on harness 12354672 plug P8 (1) from pins 3 and 4 to pins 1 (2) and 2 (3).
2. Measure resistance between harness 12354593 plug P1 (4), pins N (5) and W (6).
3. Does VTM read 0 ohms?

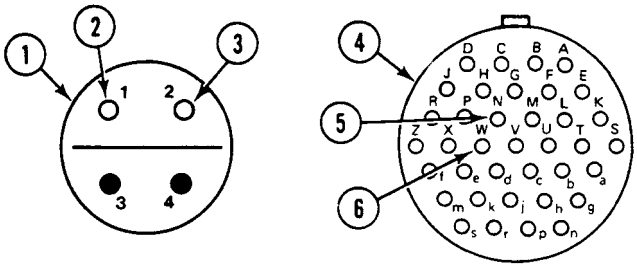

NO → GO TO **EY** (PAGE 0093 00-10)

YES

6Y

1. Has fuel supply pressure transducer been replaced?

NO → **6YN**

1. Replace fuel supply pressure transducer (WP 0134 00).
2. Verify no faults found.

YES

7Y

1. Faulty VTM.
2. Notify supervisor.

STE/ICE TEST 24 FUEL SUPPLY PRESSURE DIAGNOSTIC TROUBLESHOOTING—Continued **0093 00**

BY

1. Remove plug W1 P2 (1) from STE/ICE distribution box jack J2 (2).
2. Measure resistance between STE/ICE distribution box jack J2 (2), pins v (3) and u (4). VTM should read infinity.
3. Does VTM indicate a fault?

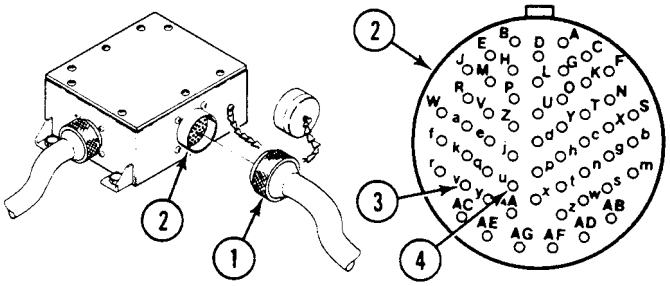

NO →

BYN

1. Faulty W1 cable. Beyond unit maintenance repair.
2. Notify supervisor.

YES ↓

B2Y

1. Remove harness 12354593 P1 (1) from STE/ICE distribution box jack J1 (2).
2. Measure resistance between 12354593 P1 (1), pins M (3) and U (4). VTM should read infinity.
3. Does VTM indicate a fault?

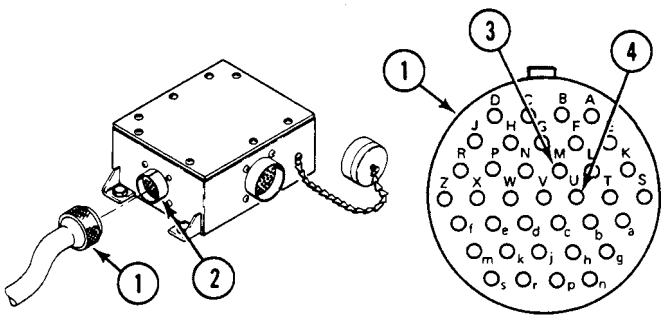

NO →

B2YN

1. Replace STE/ICE distribution box (WP 0387 00).
2. Verify no faults found.

YES ↓

STE/ICE TEST 24 FUEL SUPPLY PRESSURE DIAGNOSTIC TROUBLESHOOTING—Continued **0093 00**

B3Y

1. Remove harness 12354672 P4 (1) from harness 12354593 jack J1 (2).
2. Measure resistance between harness 12354672 plug P4 (1), pins S (3) and K (4).
3. Does VTM read infinity?

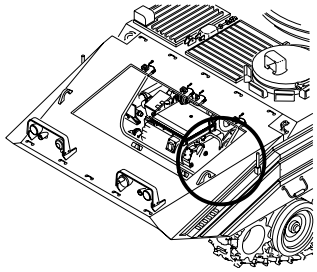

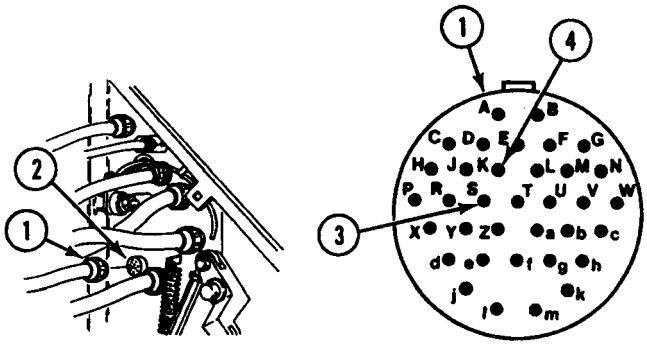

NO

B3YN

1. Replace wiring harness 12354672 (WP 0389 00).
2. Verify no faults found.

YES

B4Y

1. Replace wiring harness 12354593 (WP 0388 00).
2. Verify no faults found.

STE/ICE TEST 24 FUEL SUPPLY PRESSURE DIAGNOSTIC TROUBLESHOOTING—Continued **0093 00**

CY

1. Remove plug W1 P2 (1) from STE/ICE distribution box jack J2 (2).
2. Measure resistance between STE/ICE distribution box jack J2 (2), pins v (3) and u (4). VTM should read 0 ohms.
3. Does VTM indicate a fault?

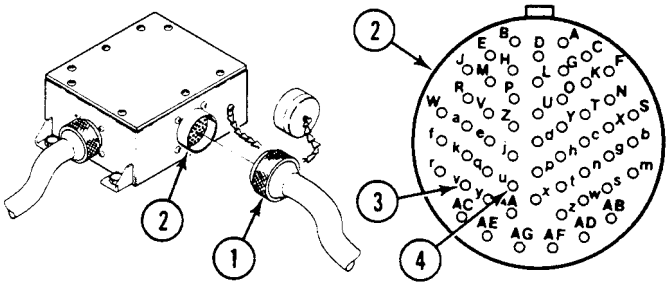

NO →

CYN

1. Faulty W1 cable. Beyond unit maintenance repair.
2. Notify supervisor.

YES ↓

C2Y

1. Remove harness 12354593 P1 (1) from STE/ICE distribution box jack J1 (2).
2. Measure resistance between 12354593 P1 (1), pins M (3) and U (4). VTM should read 0 ohms.
3. Does VTM indicate a fault?

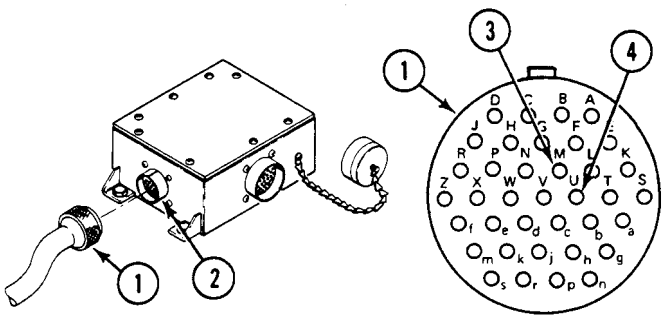

NO →

C2YN

1. Replace STE/ICE distribution box (WP 0387 00).
2. Verify no faults found.

YES ↓

STE/ICE TEST 24 FUEL SUPPLY PRESSURE DIAGNOSTIC TROUBLESHOOTING—Continued **0093 00**

C3Y

1. Remove harness 12354672 P4 (1) from harness 12354593 jack J1 (2).
2. Measure resistance between harness 12354672 plug P4 (1), pins S (3) and K (4).
3. Does VTM read 0 ohms?

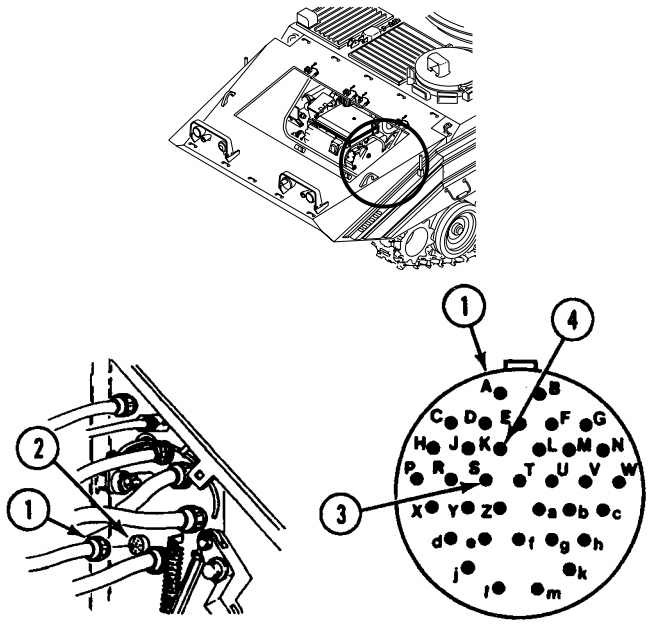

NO

C3YN

1. Repair/replace wiring harness 12354672 (WP 0189 00) or (WP 0389 00).
2. Verify no faults found.

YES

C4Y

1. Repair/replace wiring harness 12354593 (WP 0189 00) or (WP 0388 00).
2. Verify no faults found.

STE/ICE TEST 24 FUEL SUPPLY PRESSURE DIAGNOSTIC TROUBLESHOOTING—Continued **0093 00**

DY

1. Remove harness 12354672 P4 (1) from harness 12354593 jack J1 (2).
2. Measure resistance between harness 12354672 plug P4 (1), pins L (3) and T (4). Use VTM.
3. Does VTM read infinity?

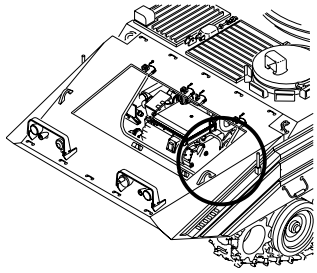

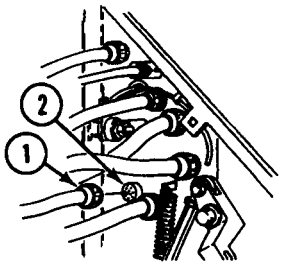

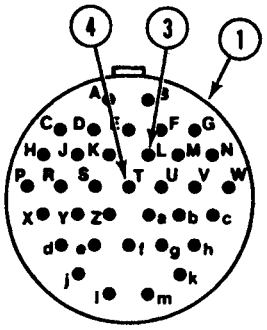

NO

DYN

1. Replace wiring harness 12354672 (WP 0191 00).
2. Verify no faults found.

YES

D2Y

1. Replace wiring harness 12354593 (WP 0388 00).
2. Verify no faults found.

STE/ICE TEST 24 FUEL SUPPLY PRESSURE DIAGNOSTIC TROUBLESHOOTING—Continued **0093 00**

EY

1. Remove harness 12354672 P4 (1) from harness 12354593 jack J1 (2).
2. Measure resistance between harness 12354672 plug P4 (1), pins L (3) and T (4).
3. Does VTM read 0 ohms?

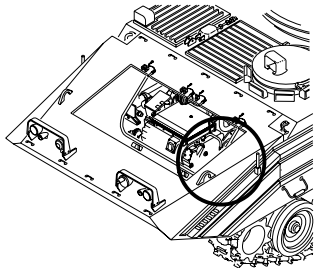

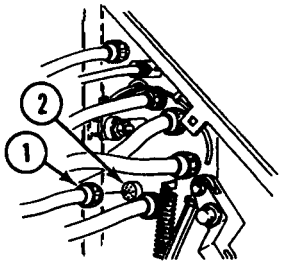

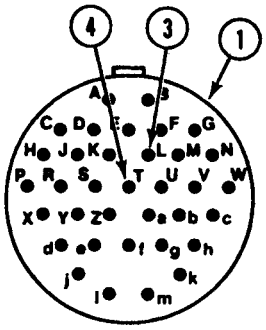

NO

EYN

1. Replace wiring harness 12354672 (WP 0191 00).
2. Verify no faults found.

YES

E2Y

1. Replace wiring harness 12354593 (WP 0388 00).
2. Verify no faults found.

STE/ICE TEST 25 FUEL RETURN PRESSURE DIAGNOSTIC TROUBLESHOOTING 0094 00

INITIAL SETUP:

Maintenance Level

Unit

Tools and Special Tools

Electrical Connector Pliers (WP 0397 00, Item 31)
Jumper Wire
STE/ICE Test Set (WP 0397 00, Item 60)

Personnel Required

Unit Mechanic 63T10
Helper (H)

References

TM 9-2350-366-10-1
TM 9-2350-366-10-2
TM 9-4910-571-12&P

Equipment Condition

Engine stopped (TM 9-2350-366-10-1)
Vehicle blocked (TM 9-2350-366-10-1)
Turret rotated to 3200 mils (TM 9-2350-366-10-2)
STE/ICE hooked up to vehicle batteries (TM 9-4910-571-12&P)
Engine access cover plate removed (WP 0308 00)
Driver's power plant access panel removed (WP 0312 00)
Front VISMOD access panels removed (WP 0307 00)

STE/ICE TEST 25 FUEL RETURN PRESSURE DIAGNOSTIC TROUBLESHOOTING—Continued **0094 00**

T

1. Remove plug W1 P1 from VTM jack J1.
2. Hook up VTM to vehicle batteries. See TM 9-4910-571-12&P.
3. Set up Test 91. See TM 9-4910-571-12&P.
4. Remove harness 12345672 plug (1) from fuel pressure transducer jack (2).
5. Measure resistance between W1 P1 (3), pins CC (4) and DD (5).
6. Does VTM read infinity?

NO → GO TO **BY** (PAGE 0094 00-6)

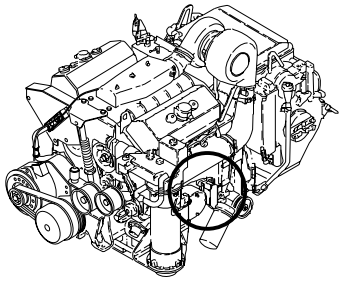

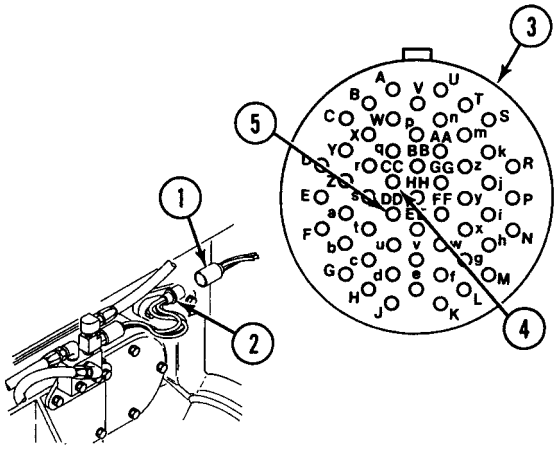

YES

STE/ICE TEST 25 FUEL RETURN PRESSURE DIAGNOSTIC TROUBLESHOOTING—Continued **0094 00**

Y

1. Install jumper wire between harness 12354672 plug P1 (1), pins 3 (2) and 4 (3).
2. Measure resistance between plug W1 P1 (4), pins CC (5) and DD (6).
3. Does VTM read 0 ohms?

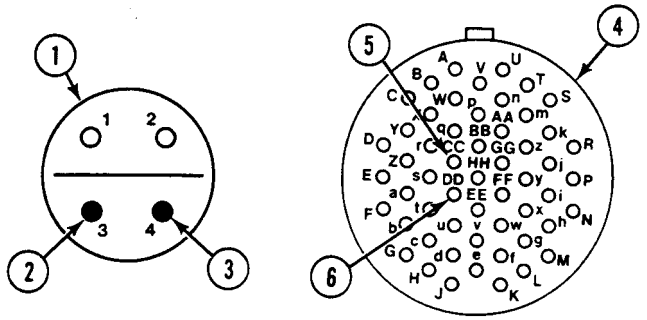

NO → GO TO **CY** (PAGE 0094 00-8)

YES

2Y

1. Remove plug W1 P2 (1) from STE/ICE distribution box jack J2 (2).
2. Measure resistance between the following plug pins:
   W1 P1 (3), pin BB (4) to W1 P2 (1), pin AB (5)
   W1 P1 (3), pin f (6) to W1 P2 (1), pin f (7)
   W1 P1 (3), pin g (8) to W1 P2 (1), pin g (9)
3. Does VTM read 0 ohms for each measurement?

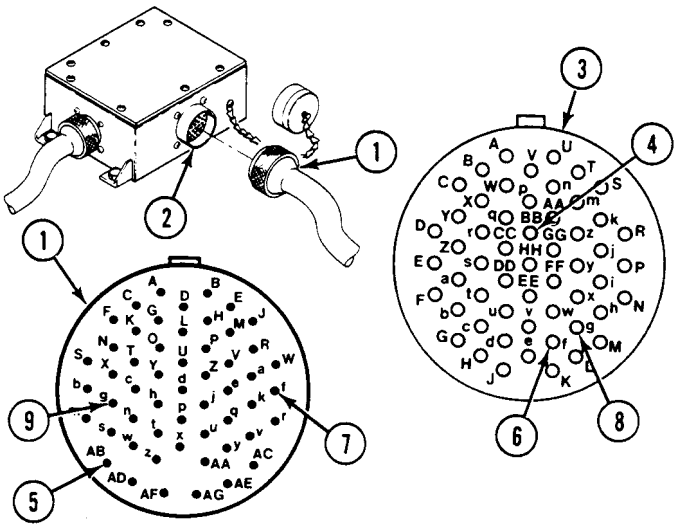

NO → **2YN**

1. Faulty W1 cable. Beyond unit maintenance repair.
2. Notify supervisor.

YES

STE/ICE TEST 25 FUEL RETURN PRESSURE DIAGNOSTIC TROUBLESHOOTING—Continued **0094 00**

3Y

1. Remove harness 12354593 P1 (1) from STE/ICE distribution box jack J1 (2).
2. Measure resistance between STE/ICE distribution box jack J2 (3), pin AB (4) and the following jack pins:
   - STE/ICE distribution box jack J2 (3), pin f, (5)
   - STE/ICE distribution box jack J2 (3)g (6)
   - STE/ICE distribution box jack J1 (2), pin g (7)
   - STE/ICE distribution box jack J1 (2), pin h (8)
3. Does VTM read between 3600 and 4400 ohms for each measurement?

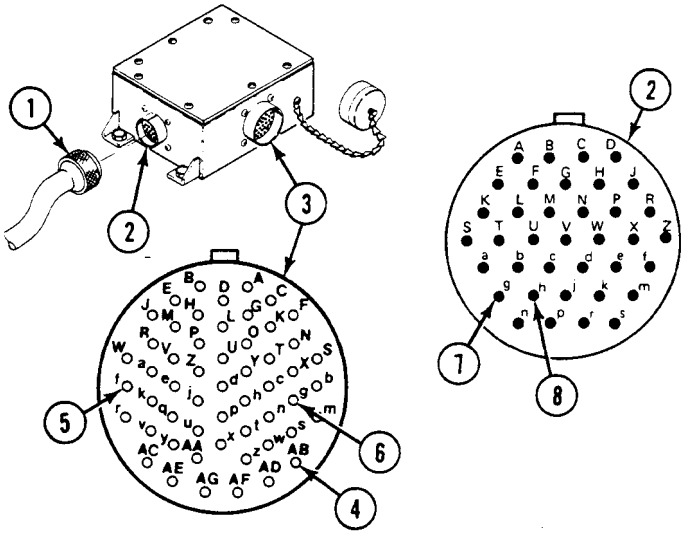

NO →

3YN

1. Replace STE/ICE distribution box (WP 0387 00).
2. Verify no faults found.

YES ↓

4Y

1. Measure resistance between harness 12354593 plug P1 (1), pins g (2) and h (3).
2. Does VTM read infinity?

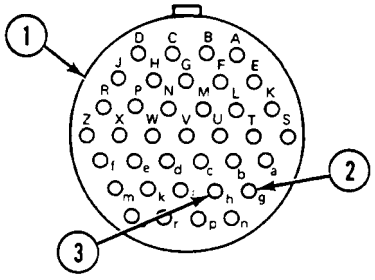

NO →

GO TO **DY** (PAGE 0094 00-10)

YES ↓

5Y

1. Move jumper wire on harness 12354672 plug P1 (1) from pins 3 and 4 to pins 1 (2) and 2 (3).
2. Measure resistance between harness 12354593 plug P1 (4), pins g (5) and h (6).
3. Does VTM read 0 ohms?

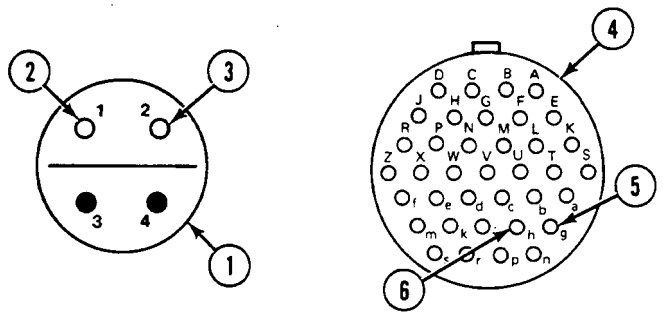

NO → GO TO **EY** (PAGE 0094 00-11)

YES

6Y

1. Has fuel return pressure transducer been replaced?

NO →

6YN

1. Replace fuel return pressure transducer (WP 0118 00).
2. Verify no faults found.

YES

7Y

1. Faulty VTM.
2. Notify supervisor.

STE/ICE TEST 25 FUEL RETURN PRESSURE DIAGNOSTIC TROUBLESHOOTING—Continued **0094 00**

BY

1. Remove plug W1 P2 (1) from STE/ICE distribution box jack J2 (2).
2. Measure resistance between STE/ICE distribution box jack J2 (2), pins AC (3) and AD (4). VTM should read infinity.
3. Does VTM indicate a fault?

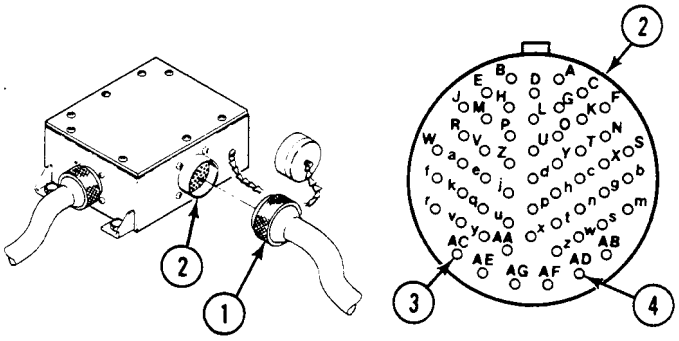

NO →

BYN

1. Faulty W1 cable. Beyond unit maintenance repair.
2. Notify supervisor.

YES ↓

B2Y

1. Remove harness 12354593 P1 (1) from STE/ICE distribution box jack J1 (2).
2. Measure resistance between 12354593 P1 (1), pins p (3) and n (4). VTM should read infinity.
3. Does VTM indicate a fault?

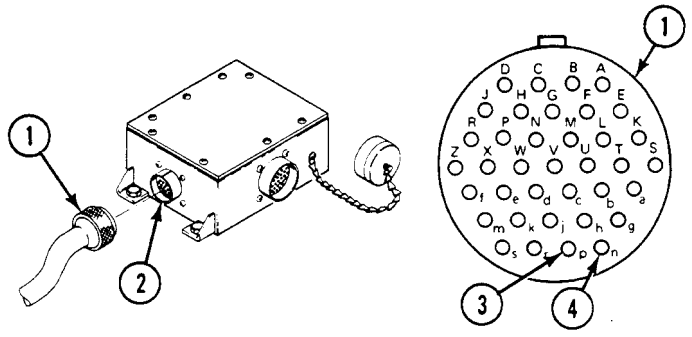

NO →

B2YN

1. Replace STE/ICE distribution box (WP 0387 00).
2. Verify no faults found.

YES ↓

B3Y

1. Remove harness 12354672 P4 (1) from harness 12354593 jack J1 (2).
2. Measure resistance between harness 12354672 plug P4 (1), pins b (3) and c (4).
3. Does VTM read infinity?

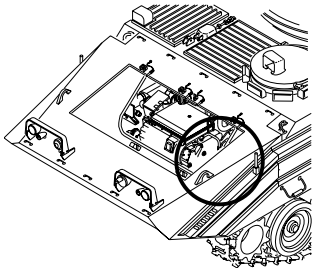

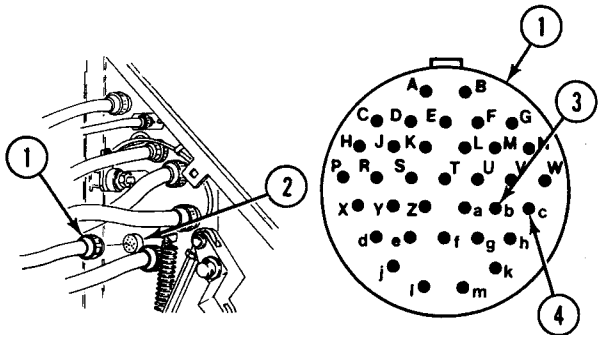

NO

B3YN

1. Replace wiring harness 12354672 (WP 0389 00).
2. Verify no faults found.

YES

B4Y

1. Replace wiring harness 12354593 (WP 0388 00).
2. Verify no faults found.

STE/ICE TEST 25 FUEL RETURN PRESSURE DIAGNOSTIC TROUBLESHOOTING—Continued **0094 00**

CY

1. Remove plug W1 P2 (1) from STE/ICE distribution box jack J2 (2).
2. Measure resistance between STE/ICE distribution box jack J2 (2), pins AC (3) and AD (4). VTM should read 0 ohms.
3. Does VTM indicate a fault?

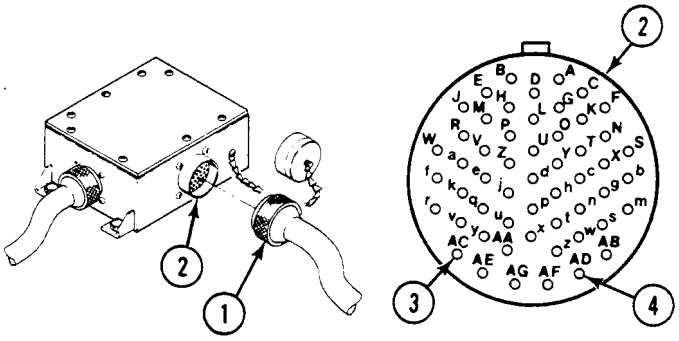

NO →

CYN

1. Faulty W1 cable. Beyond unit maintenance repair.
2. Notify supervisor.

YES ↓

C2Y

1. Remove harness 12354593 P1 (1) from STE/ICE distribution box jack J1 (2).
2. Measure resistance between 12354593 P1 (1), pins p (3) and n (4). VTM should read 0 ohms.
3. Does VTM indicate a fault?

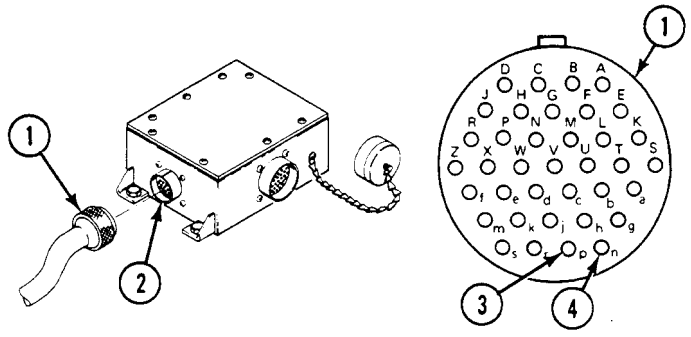

NO →

C2YN

1. Replace STE/ICE distribution box (WP 0387 00).
2. Verify no faults found.

YES ↓

C3Y

1. Remove harness 12354672 P4 (1) from harness 12354593 jack J1 (2).
2. Measure resistance between harness 12354672 plug P4 (1), pins b (3) and c (4).
3. Does VTM read 0 ohms?

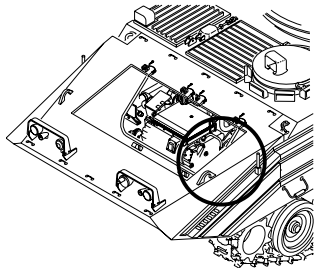

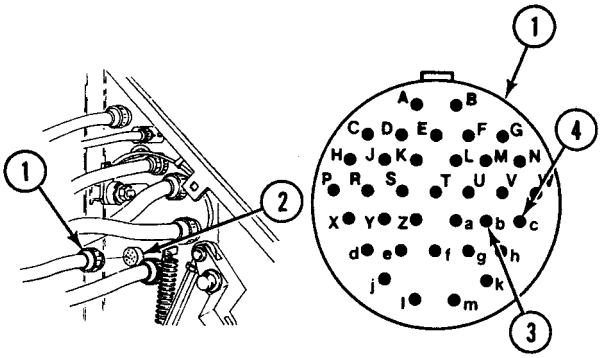

NO →

C3YN

1. Repair/replace wiring harness 12354672 (WP 0189 00) or (WP 0389 00).
2. Verify no faults found.

YES ↓

C4Y

1. Repair/replace wiring harness 12354593 (WP 0189 00) or (WP 0388 00).
2. Verify no faults found.

STE/ICE TEST 25 FUEL RETURN PRESSURE DIAGNOSTIC **0094 00**
TROUBLESHOOTING—Continued

DY

1. Remove harness 12354672 P4 (1) from harness 12354593 jack J1 (2).
2. Measure resistance between harness 12354672 plug P4 (1), pins j (3) and h (4).
3. Does VTM read infinity?

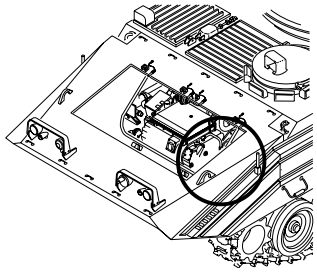

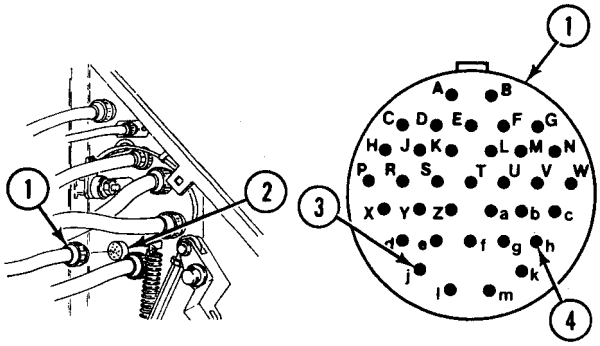

NO →

DYN

1. Replace wiring harness 12354672 (WP 0389 00).
2. Verify no faults found.

YES ↓

D2Y

1. Replace wiring harness 12354593 (WP 0388 00).
2. Verify no faults found.

STE/ICE TEST 25 FUEL RETURN PRESSURE DIAGNOSTIC TROUBLESHOOTING—Continued **0094 00**

EY

1. Remove harness 12354672 P4 (1) from harness 12354593 jack J1 (2).
2. Measure resistance between harness 12354672 plug P4 (1), pins j (3) and h (4).
3. Does VTM read 0 ohms?

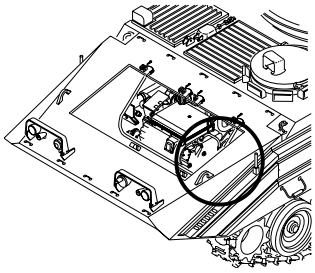

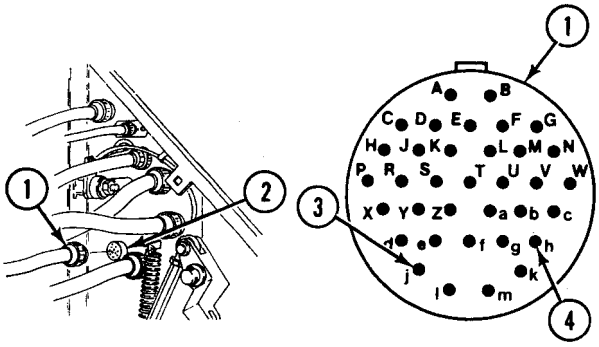

NO

EYN

1. Replace wiring harness 12354672 (WP 0389 00).
2. Verify no faults found.

YES

E2Y

1. Replace wiring harness 12354593 (WP 0388 00).
2. Verify no faults found.

STE/ICE TEST 32 AIR BOX PRESSURE DIAGNOSTIC TROUBLESHOOTING 0095 00

INITIAL SETUP:

Maintenance Level

Unit

Tools and Special Tools

Electrical connector pliers (WP 0397 00, Item 31)
Jumper wire
STE/ICE Test Set (WP 0397 00, Item 60)

Personnel Required

Unit Mechanic 63T10
Helper (H)

References

TM 9-2350-366-10-1
TM 9-2350-366-10-2
TM 9-4910-571-12&P

Equipment Condition

Engine stopped (TM 9-2350-366-10-1)
Vehicle blocked (TM 9-2350-366-10-1)
Turret rotated to 3200 mils (TM 9-2350-366-10-2)
Engine access cover plate removed (WP 0308 00)
Driver's power plant access panel removed (WP 0312 00)
Front VISMOD access panels removed (WP 0307 00)

T

1. Remove plug W1 P1 from VTM jack J1.
2. Hook up VTM to vehicle batteries. See TM 9-4910-571-12&P.
3. Set up Test 91. See TM 9-4910-571-12&P.
4. Remove harness 12345672 plug P9 (1) from air box pressure transducer (2).
5. Measure resistance between W1 P1 (3), pins z (4) and y (5).
6. Does VTM read infinity?

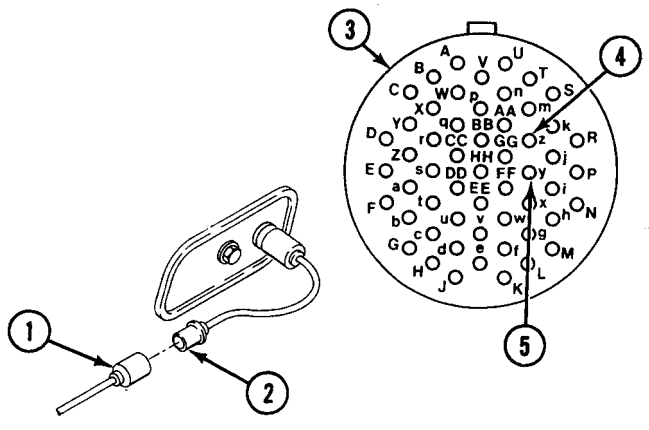

NO → GO TO **BY** (PAGE 0095 00-5)

YES ↓

Y

1. Install jumper wire between harness 12354672 plug P9 (1), pins 3 (2) and 4 (3).
2. Measure resistance between plug W1 P1 (4), pins z (5) and y (6).
3. Does VTM read 0 ohms?

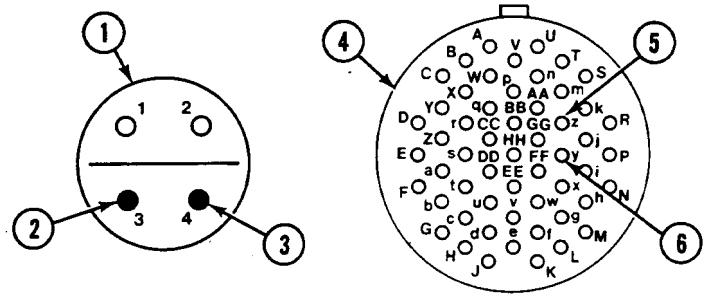

NO → GO TO **CY** (PAGE 0095 00-7)

YES

2Y

1. Remove plug W1 P2 (1) from STE/ICE distribution box jack J2 (2).
2. Measure resistance between the following plug pins:
   W1 P1 (3), pin BB (4) to W1 P2 (1), pin AB (5)
   W1 P1 (3), pin f (6) to W1 P2 (1), pin f (7)
   W1 P1 (3), pin g (8) to W1 P2 (1), pin g (9)
3. Does VTM read 0 ohms for each measurement?

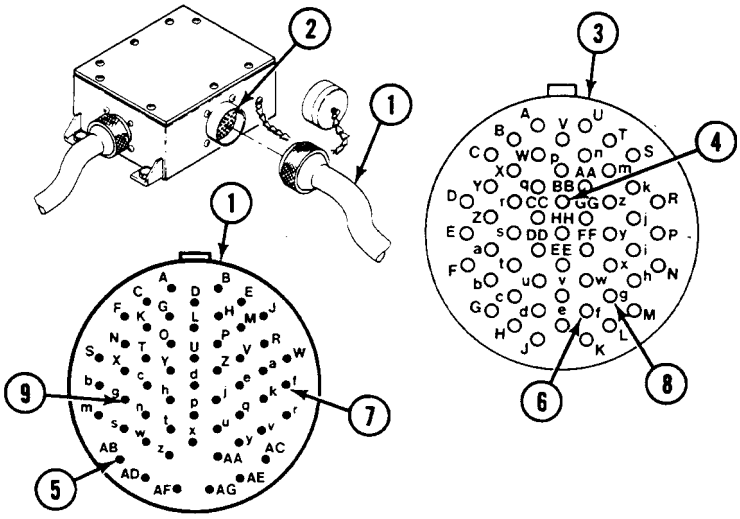

NO → **2YN**

1. Faulty W1 cable. Beyond unit maintenance repair.
2. Notify supervisor.

YES

3Y

1. Remove harness 12354593 P1 (1) from STE/ICE distribution box jack J1 (2).
2. Set up Test 92. See TM 9-4910-571-12&P.
3. Measure resistance between STE/ICE distribution box jack J2 (5), pin AB (4) and the following jack pins:
   - J2 (5), pin AB to J2 pin f (6)
   - J2 (5), pin AB to J2 pin g (7)
   - J2 (5), pin AB to J1 pin d (8)
   - J2 (5), pin AB to J1 pin i (9)
4. Does VTM read between 3600 and 4400 ohms for each measurement?

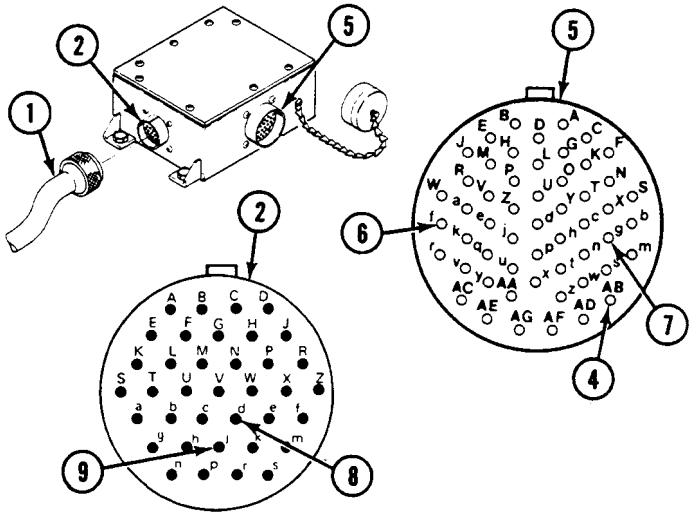

NO →

3YN

1. Replace STE/ICE distribution box (WP 0387 00).
2. Verify no faults found.

YES ↓

4Y

1. Set up Test 91. See TM 9-4910-571-12&P.
2. Measure resistance between harness 12354593 plug P1 (1), pins d (2) and j (3).
3. Does VTM read infinity?

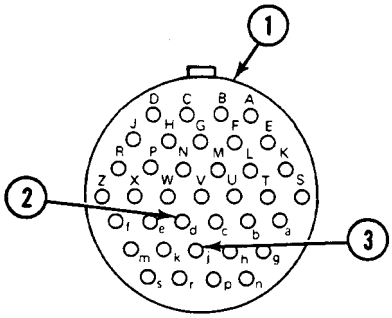

NO → GO TO **DY** (PAGE 0095 00-9)

YES

5Y

1. Move jumper wire on harness 12354672 plug P9 (1) from pins 3 and 4 to pins 1 (2) and 2 (3).
2. Measure resistance between harness 12354593 plug P1 (4), pins d (5) and j (6).
3. Does VTM read 0 ohms?

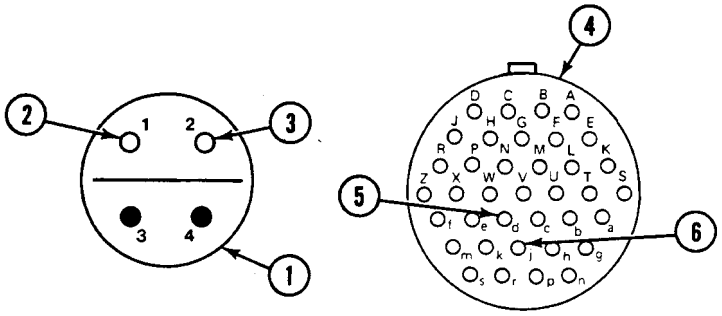

NO → GO TO **EY** (PAGE 0095 00-10)

YES

6Y

1. Has air box pressure transducer been replaced?

NO → **6YN**

1. Replace air box pressure transducer (WP 0120 00).
2. Verify no faults found.

YES ↓

7Y

1. Faulty VTM.
2. Notify supervisor.

BY

1. Remove plug W1 P2 (1) from STE/ICE distribution box jack J2 (2).
2. Measure resistance between STE/ICE distribution box jack J2 (2), pins y (3) and z (4). VTM should read infinity.
3. Does VTM indicate a fault?

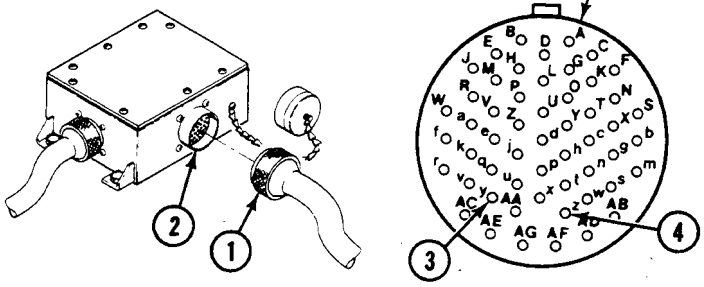

NO → **BYN**

1. Faulty W1 cable. Beyond unit maintenance repair.
2. Notify supervisor.

YES ↓

B2Y

1. Remove harness 12354593 P1 (1) from STE/ICE distribution box jack J1 (2).
2. Measure resistance between 12354593 P1 (1), pins V (3) and c (4). VTM should read infinity.
3. Does VTM indicate a fault?

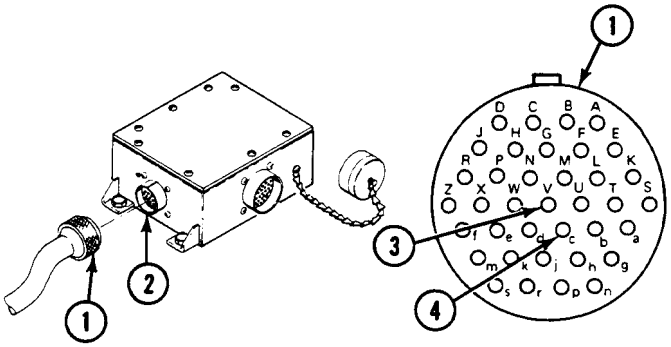

NO → **B2YN**

1. Replace STE/ICE distribution box (WP 0387 00).
2. Verify no faults found.

YES ↓

B3Y

1. Remove harness 12354672 P4 (1) from harness 12354593 jack J1 (2).
2. Measure resistance between harness 12354672 plug P4 (1), pins Z (3) and e (4).
3. Does VTM read infinity?

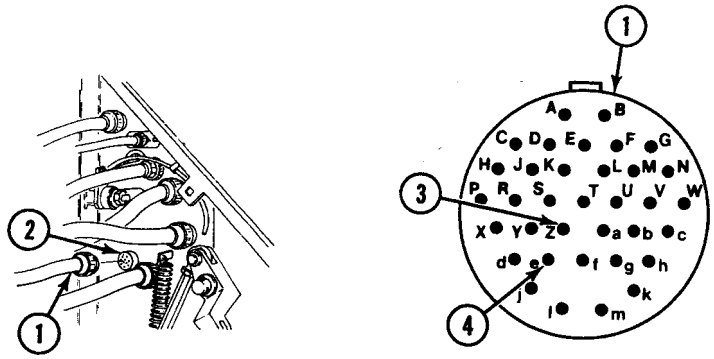

NO → **B3YN**

1. Replace wiring harness 12354672 (WP 0389 00).
2. Verify no faults found.

YES ↓

B4Y

1. Replace wiring harness 12354593 (WP 0388 00).
2. Verify no faults found.

CY

1. Remove plug W1 P2 (1) from STE/ICE distribution box jack J2 (2).
2. Measure resistance between STE/ICE distribution box jack J2 (2), pins y (3) and z (4). VTM should read 0 ohms.
3. Does VTM indicate a fault?

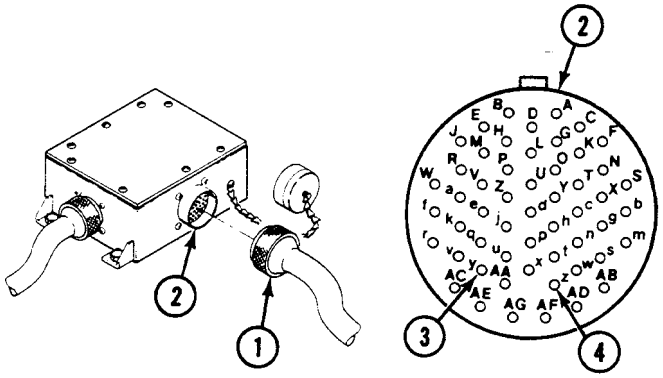

NO

CYN

1. Faulty W1 cable. Beyond unit maintenance repair.
2. Notify supervisor.

YES

C2Y

1. Remove harness 12354593 P1 (1) from STE/ICE distribution box jack J1 (2).
2. Measure resistance between 12354593 P1 (1), pins V (3) and c (4). VTM should read 0 ohms.
3. Does VTM indicate a fault?

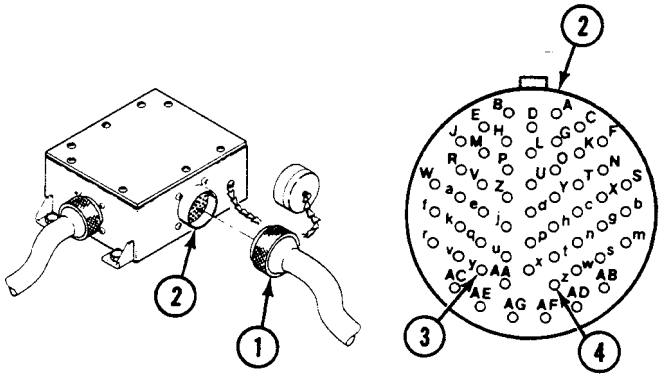

NO

C2YN

1. Replace STE/ICE distribution box (WP 0387 00).
2. Verify no faults found.

YES

C3Y

1. Remove harness 12354672 P4 (1) from harness 12354593 jack J1 (2).
2. Measure resistance between harness 12354672 plug P4 (1), pins Z (3) and e (4).
3. Does VTM read 0 ohms?

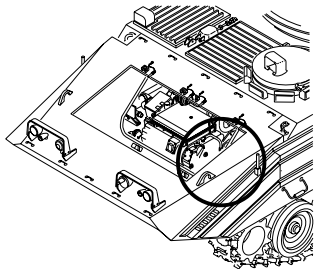

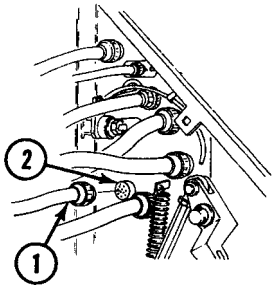

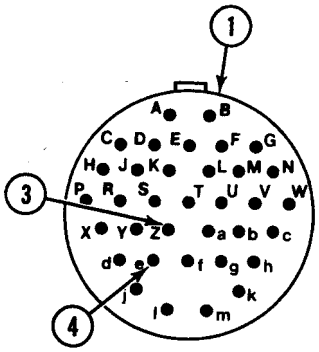

NO

C3YN

1. Repair/replace wiring harness 12354672 (WP 0191 00).
2. Verify no faults found.

YES

C4Y

1. Repair/replace wiring harness 12354593 (WP 0388 00).
2. Verify no faults found.

DY

1. Remove harness 12354672 P4 (1) from harness 12354593 jack J1 (2).
2. Measure resistance between harness 12354672 plug P4 (1), pins a (3) and f (4).
3. Does VTM read infinity?

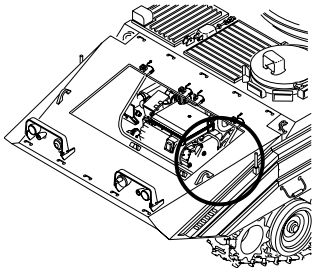

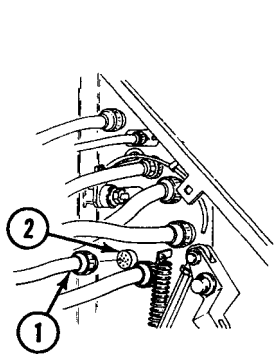

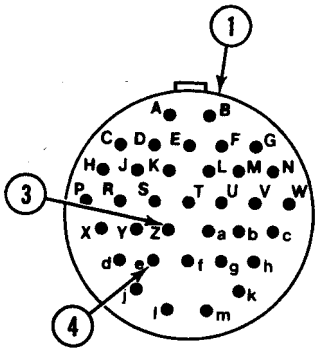

NO

DYN

1. Replace wiring harness 12354672 (WP 0191 00).
2. Verify no faults found.

YES

D2Y

1. Replace wiring harness 12354593 (WP 0388 00).
2. Verify no faults found.

EY

1. Remove harness 12354672 P4 (1) from harness 12354593 jack J1 (2).
2. Measure resistance between harness 12354672 plug P4 (1), pins a (3) and f (4).
3. Does VTM read 0 ohms?

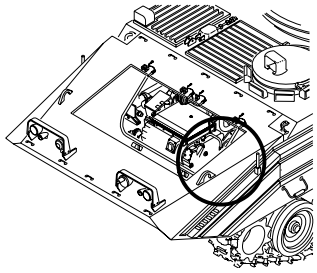

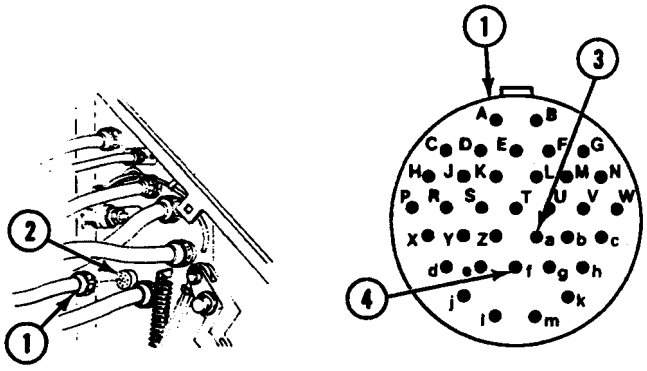

NO →

EYN

1. Replace wiring harness 12354672 (WP 0389 00).
2. Verify no faults found.

YES ↓

E2Y

1. Replace wiring harness 12354593 (WP 0388 00).
2. Verify no faults found.

STE/ICE TEST 68 STARTER MOTOR VOLTAGE DIAGNOSTIC TROUBLESHOOTING 0096 00

INITIAL SETUP:

Maintenance Level

Unit

Tools and Special Tools

Electrical Connector Pliers (WP 0397 00, Item 31)
Jumper Wire
STE/ICE Test Set (WP 0397 00, Item 60)

Personnel Required

Unit Mechanic 63T10

References

TM 9-2350-366-10-1
TM 9-4910-571-12&P

Equipment Condition

Engine stopped (TM 9-2350-366-10-1)
Vehicle blocked (TM 9-2350-366-10-1)
Engine access cover plate removed (WP 0308 00)
Driver's power plant access panel removed (WP 0312 00)
Front VISMOD access panels removed (WP 0307 00)

T

1. Remove plug W1 P1 from VTM jack J1.
2. Hook up VTM to vehicle batteries. See TM 9-4910-571-12&P.
3. Turn MASTER SWITCH ON.
4. Set up Test 89. See TM 9-4910-571-12&P.
5. Measure voltage between W1 P1 (1) pins W (2) and T (3) with START switch pressed.
6. Does VTM read 0 volts?

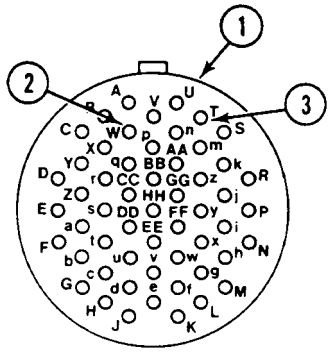

NO →

TN

1. Faulty W1 cable. Beyond unit maintenance repair.
2. Notify supervisor.

YES ↓

STE/ICE TEST 68 STARTER MOTOR VOLTAGE DIAGNOSTIC TROUBLESHOOTING—Continued **0096 00**

Y

1. Remove plug W1 P2 (1) from STE/ICE distribution box jack J2 (2).
2. Measure voltage between STE/ICE distribution box jack J2 (2), pins W (3) and T (4).
3. Press START button for 2 to 4 seconds.
4. Does VTM read 0 volts?

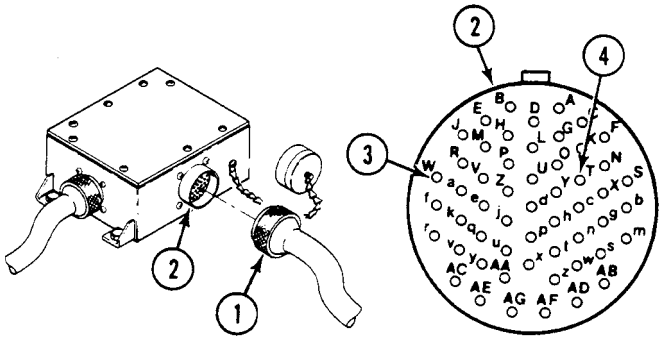

NO

YN

1. Faulty W1 cable. Beyond unit maintenance repair.
2. Notify supervisor.

YES

2Y

1. Remove harness 12354593 P1 (1) from STE/ICE distribution box jack J1 (2).
2. Measure voltage between 12354593 P1 (1), pins K (+) (3) and k (-) (4).
3. Press START button for 2 to 4 seconds.
4. Does VTM read 0 volts?

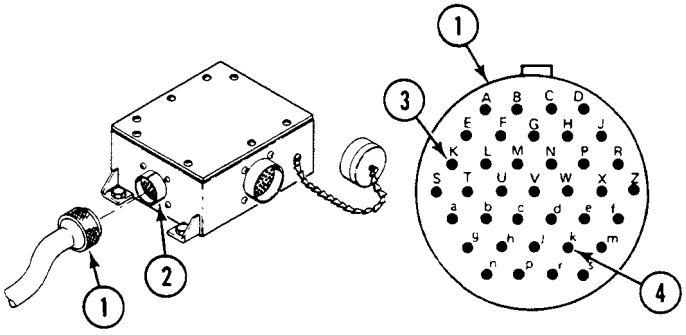

NO

2YN

1. Replace STE/ICE distribution box (WP 0387 00).
2. Verify no faults found.

YES

STE/ICE TEST 68 STARTER MOTOR VOLTAGE DIAGNOSTIC TROUBLESHOOTING—Continued **0096 00**

3Y

1. Turn MASTER SWITCH OFF.
2. Set up Test 91. See TM 9-4910-571-12&P.
3. Measure resistance between harness 12354593 plug P1 (1), pin k (2) and ground.
4. Does VTM read more than 0 ohms?

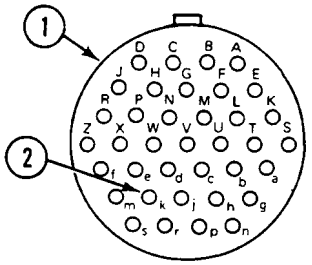

NO →

3YN

1. Replace wiring harness 12354593 (WP 0388 00).
2. Verify no faults found.

YES ↓

STE/ICE TEST 68 STARTER MOTOR VOLTAGE DIAGNOSTIC TROUBLESHOOTING—Continued **0096 00**

4Y

1. Set up Test 89. See TM 9-4910-571-12&P.
2. Remove harness 12354672 plug P4 (1) from harness 12354593 jack J1 (2).
3. Turn MASTER SWITCH ON.
4. Measure voltage between harness 12354672 plug P4 (1), pin A (3) and ground.
5. Press START button for 2 to 4 seconds.
6. Does VTM read 0 volts?

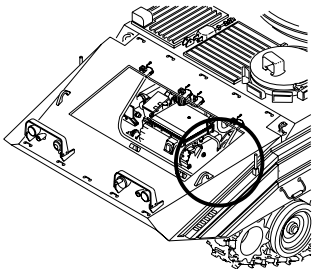

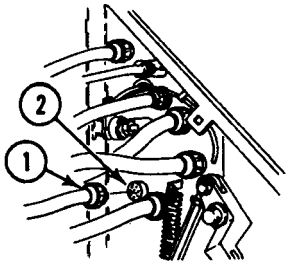

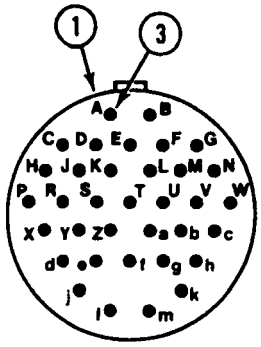

NO

4YN

1. Repair/replace wiring harness 12354593 circuit 799 (WP 0189 00) or (WP 0388 00).
2. Verify no faults found.

YES

5Y

1. Repair/replace wiring harness 12354672 circuit 776 (WP 0189 00) or (WP 0389 00).
2. Verify no faults found.

STE/ICE TEST 69 STARTER NEGATIVE CABLE VOLTAGE DROP DIAGNOSTIC TROUBLESHOOTING 0097 00

INITIAL SETUP:

Maintenance Level

Unit

Tools and Special Tools

Electrical Connector Pliers (WP 0397 00, Item 31)
Jumper Wire
Ste/Ice Test Set (WP 0397 00, Item 60)

Personnel Required

Unit Mech 63T10

References

TM 9-2350-366-10-1
TM 9-4910-571-12&P

Equipment Condition

Engine stopped TM 9-2350-366-10-1
Vehicle blocked TM 9-2350-366-10-1
Engine access cover plate removed (WP 0309 00)
Driver's power plant access panel removed (WP 0312 00)
Front VISMOD access panels removed (WP 0307 00)

STE/ICE TEST 69 STARTER NEGATIVE CABLE VOLTAGE DROP DIAGNOSTIC TROUBLESHOOTING—Continued **0097 00**

T

1. Remove plug W1 P1 from VTM jack J1.
2. Hook up VTM to vehicle batteries. See TM 9-4910-571-12&P.
3. Set up Test 89. See TM 9-4910-571-12&P.
4. Measure resistance between W1 P1 (1), pin W (2) and harness 12354593 circuit 779 terminal E4 (3) on battery negative terminal (4).
5. Measure resistance between W1 P1 (1), pin M (5) and harness 12354672 circuit 773 terminal E2 (6) on starter ground stud (7).
6. Does VTM read more than one ohm either time?

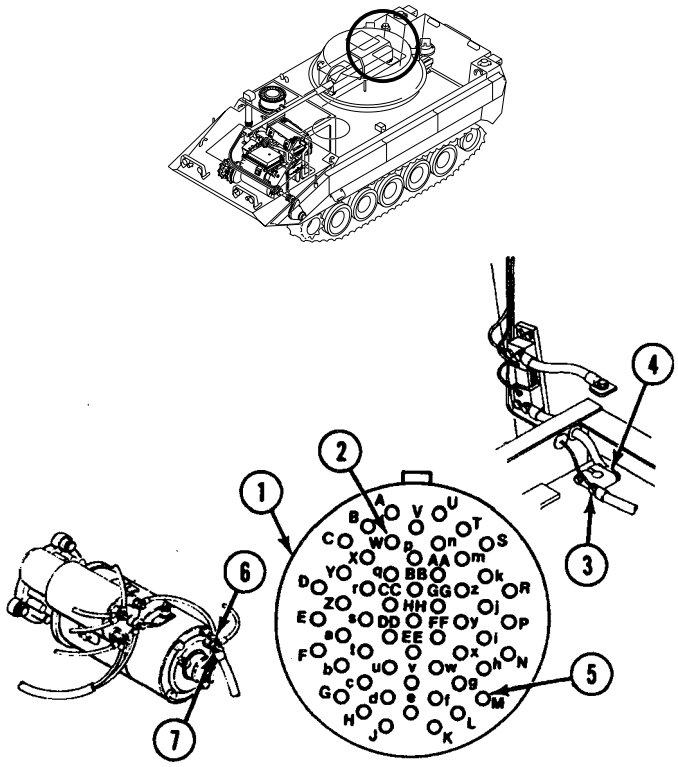

NO

TN

1. Faulty VTM.
2. Notify supervisor.

YES

STE/ICE TEST 69 STARTER NEGATIVE CABLE VOLTAGE DROP DIAGNOSTIC TROUBLESHOOTING—Continued **0097 00**

Y

1. Remove plug W1 P2 (1) from STE/ICE distribution box jack J2 (2).
2. Measure resistance between STE/ICE distribution box jack J2 (2), pin W (3) and harness 12354593 circuit 779 terminal E4 on battery negative terminal.
3. Measure resistance between STE/ICE distribution box jack J2 (2), pin M (4) and harness 12345472 circuit 773 terminal E2 on starter.
4. Does VTM read more than one ohm either time?

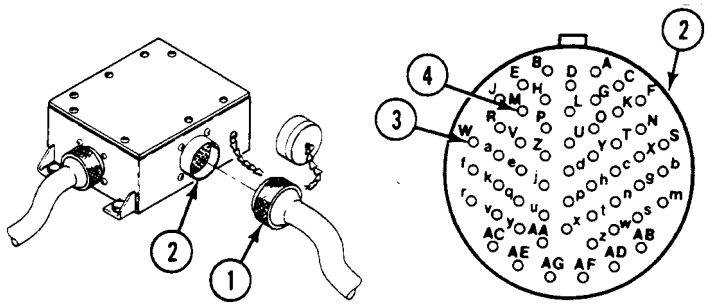

NO

YN

1. Faulty W1 cable. Beyond unit maintenance repair.
2. Notify supervisor.

YES

2Y

1. Remove harness 12354593 P1 (1) from STE/ICE distribution box jack J1 (2).
2. Measure resistance between 12354593 P1 (1), pin k (3) and harness 1235493 circuit 779 terminal E4 on battery negative terminal.
3. Measure resistance between 12354593 P1 (1), pin f (4) and harness 12354672 circuit 773 terminal E2 on starter.
4. Does VTM read more than one ohm either time?

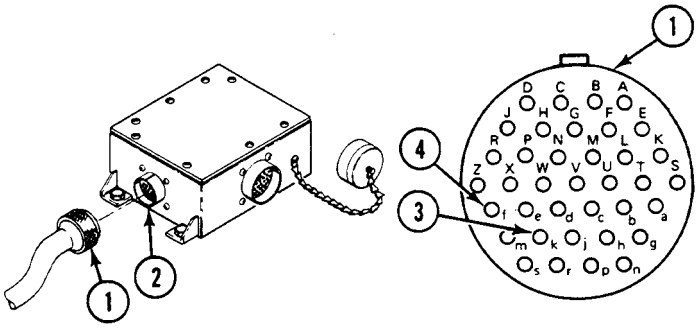

NO

2YN

1. Replace STE/ICE distribution box (WP 0387 00).
2. Verify no faults found.

YES

STE/ICE TEST 69 STARTER NEGATIVE CABLE VOLTAGE DROP DIAGNOSTIC TROUBLESHOOTING—Continued **0097 00**

3Y

1. Remove harness 12354672 P4 (1) from harness 12354593 jack J1 (2).
2. Measure resistance between harness 12354672 plug P4 (1), pin l (3) and starter ground stud (4).
3. Does VTM read more than 1 ohm?

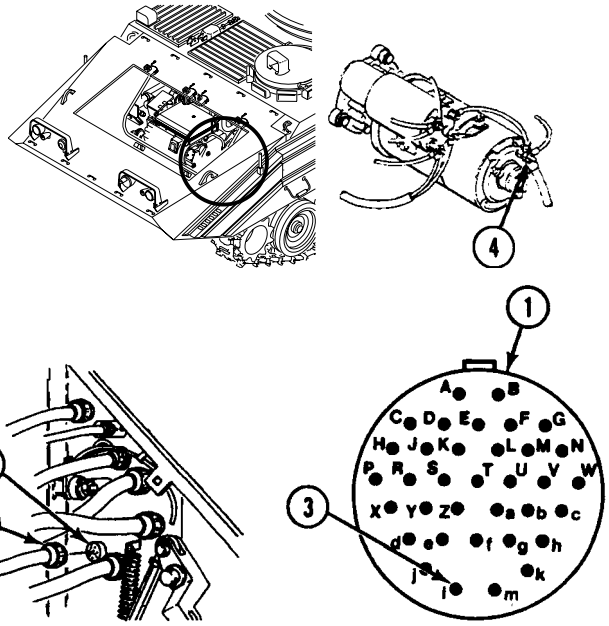

NO

3YN

1. Replace wiring harness 12354593 (WP 0388 00).
2. Verify no faults found.

YES

4Y

1. Replace wiring harness 12354672 (WP 0389 00).
2. Verify no faults found.

STE/ICE TEST 70 STARTER SOLENOID VOLTAGE DIAGNOSTIC TROUBLESHOOTING 0098 00

INITIAL SETUP:

Maintenance Level

Unit

Tools and Special Tools

Electrical Connector Pliers (WP 0397 00, Item 31)
Jumper Wire
STE/ICE Test Set (WP 0397 00, Item 60)

Personnel Required

Unit Mechanic 63T10

References

TM 9-2350-366-10-1
TM 9-4910-571-12&P

Equipment Condition

Engine stopped TM 9-2350-366-10-1
Vehicle blocked TM 9-2350-366-10-1
Engine access panel removed (WP 0308 00)
Driver's power plant access panel removed (WP 0312 00)
Front VISMOD access panel removed (WP 0307 00)

T

1. Remove plug W1 P1 from VTM jack J1.
2. Hook up VTM to vehicle batteries. See TM 9-4910-571-12&P.
3. Set up Test 89. See TM 9-4910-571-12&P.
4. Turn MASTER SWITCH ON.
5. Measure voltage between W1 P1 (1), pins S (+) (2) and M (-) (3).
6. Does VTM read 0 volts?

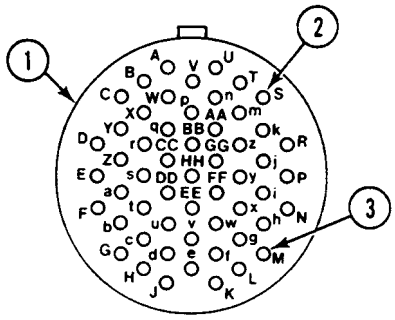

NO →

TN

1. Faulty VTM.
2. Notify supervisor.

YES ↓

STE/ICE TEST 70 STARTER SOLENOID VOLTAGE DIAGNOSTIC TROUBLESHOOTING—Continued **0098 00**

Y

1. Turn MASTER SWITCH OFF.
2. Set up Test 91 TM 9-4910-571-12&P.
3. Remove nut (1) and harness 12354672 circuit 775 terminal end E3 (2) from solenoid positive terminal (3).
4. Ground terminal E3 to starter ground stud (4).
5. Remove plug W1 P2 (5) from STE/ICE distribution box jack J2 (6).
6. Measure resistance between STE/ICE distribution box jack J2 (6), pins S (7) and M (8).
7. Does VTM read more than 0 ohms?

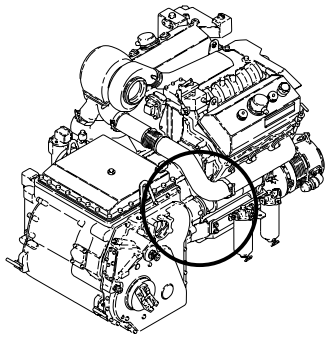

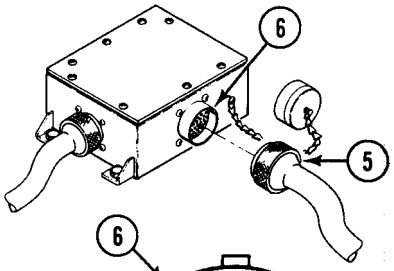

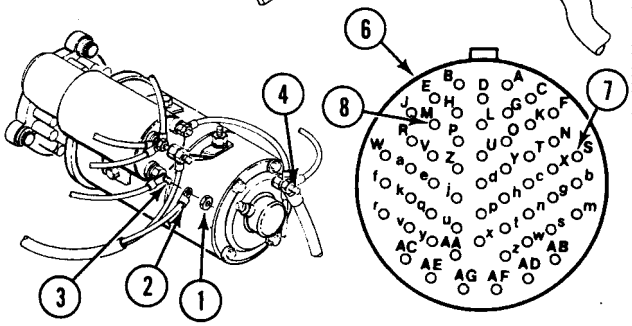

NO

YN

1. Faulty W1 cable. Beyond unit maintenance repair.
2. Notify supervisor.

YES

STE/ICE TEST 70 STARTER SOLENOID VOLTAGE DIAGNOSTIC TROUBLESHOOTING—Continued **0098 00**

2Y

1. Remove harness 12354593 P1 (1) from STE/ICE distribution box jack J1 (2).
2. Measure resistance between 12354593 P1 (1), pins F (3) and f(4).
3. Does VTM read more than 0 ohms?

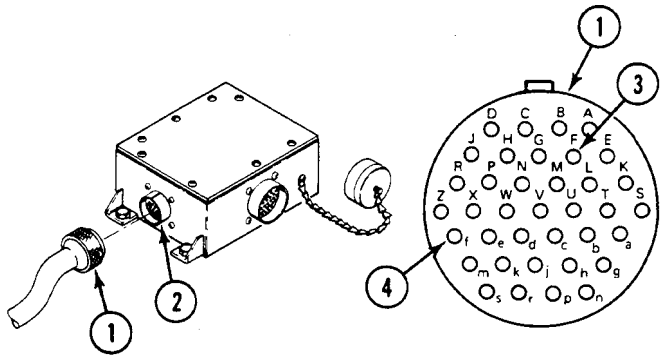

NO

2YN

1. Replace STE/ICE distribution box (WP 0387 00).
2. Verify no faults found.

YES

STE/ICE TEST 70 STARTER SOLENOID VOLTAGE DIAGNOSTIC **0098 00**
TROUBLESHOOTING—Continued

3Y

1. Remove harness 12354672 P4 (1) from harness 12354593 jack J1 (2).
2. Measure resistance between harness 12354672 plug P4 (1), pins F (3) and l(4).
3. Does VTM read more than 0 ohms?

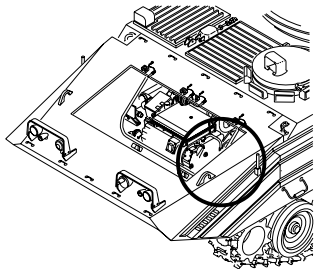

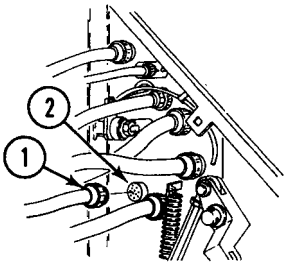

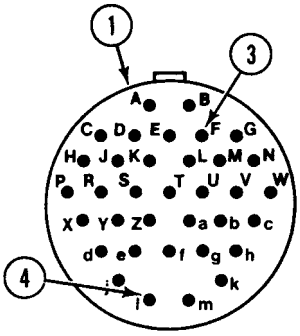

NO →

3YN

1. Replace wiring harness 12354593 (WP 0388 00).
2. Verify no faults found.

YES ↓

4Y

1. Replace wiring harness 12354672 (WP 0389 00).
2. Verify no faults found.

STE/ICE TEST 82 GENERATOR OUTPUT VOLTAGE DIAGNOSTIC TROUBLESHOOTING 0099 00

INITIAL SETUP:

Maintenance Level

Unit

Tools and Special Tools

Electrical Connector Pliers (WP 0397 00, Item 31)
Jumper Wire
STE/ICE Test Set (WP 0397 00, Item 60)

Personnel Required

Unit Mech 63T10
Helper (H)

References

TM 9-2350-366-10-1
TM 9-4910-571-12&P

Equipment Condition

Engine stopped TM 9-2350-366-10-1
Vehicle blocked TM 9-2350-366-10-1
Engine access panel removed (WP 0308 00)
Driver's power plant access panel removed (WP 0312 00)
Front VISMOD access panel removed (WP 0307 00)

T

1. Remove plug W1 P1 from VTM jack J1.
2. Hook up VTM to vehicle batteries. See TM 9-4910-571-12&P.
3. Set up Test 89. See TM 9-4910-571-12&P.
4. Measure voltage between W1 P1 (1), pins N (+) (2) and W (-) (3).
5. Does VTM read 0 volts?

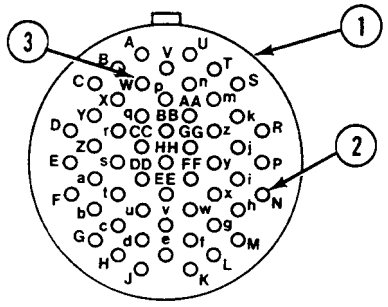

NO →

TN

1. Faulty VTM.
2. Notify supervisor.

YES ↓

STE/ICE TEST 82 GENERATOR OUTPUT VOLTAGE DIAGNOSTIC TROUBLESHOOTING—Continued **0099 00**

Y

1. Remove plug W1 P2 (1) from STE/ICE distribution box jack J2 (2).
2. Measure voltage between STE/ICE distribution box jack J2 (2), pins N (3) and W (4).
3. Does VTM read 0 volts?

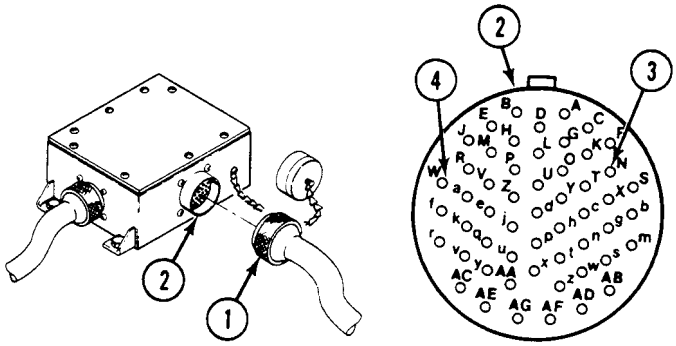

NO

YN

1. Faulty W1 cable. Beyond unit maintenance repair.
2. Notify supervisor.

YES

2Y

1. Remove harness 12354593 P1 (1) from STE/ICE distribution box jack J1 (2).
2. Measure resistance between 12354593 P1 (1), pins B (+) (3) and k (-) (4).
3. Does VTM read 0 volts?

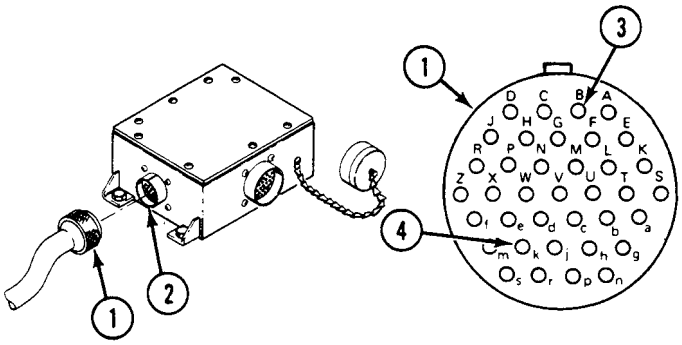

NO

2YN

1. Replace wiring harness 12354593 (WP 0388 00).
2. Verify no faults found.

YES

STE/ICE TEST 82 GENERATOR OUTPUT VOLTAGE DIAGNOSTIC TROUBLESHOOTING—Continued **0099 00**

3Y

1. Remove harness 12354672 P4 (1) from harness 12354593 jack J1 (2).
2. Measure voltage between harness 12354672 plug P4 (1), pin B (3) and ground.
3. Does VTM read 0 volts?

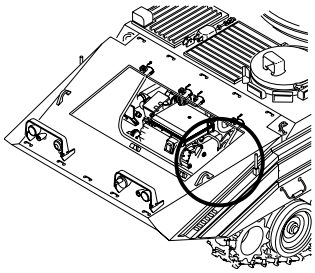

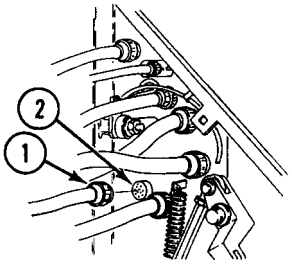

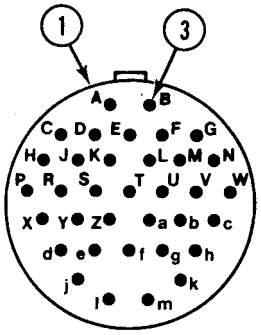

NO

3YN

1. Replace wiring harness 12354593 (WP 0388 00).
2. Verify no faults found.

YES

4Y

1. Replace wiring harness 12354672 (WP 0389 00).
2. Verify no faults found.

STE/ICE TEST 83 GENERATOR FIELD VOLTAGE DIAGNOSTIC TROUBLESHOOTING 0100 00

INITIAL SETUP:

Maintenance Level
Unit

Tools and Special Tools
Electrical Connector Pliers (WP 0397 00, Item 31)
Jumper Wire
STE/ICE Test Set (WP 0397 00, Item 60)

Personnel Required
Unit Mechanic 63T10

References
TM 9-2350-366-10-1
TM 9-4910-571-12&P

Equipment Condition
Engine stopped TM 9-2350-366-10-1
Vehicle blocked TM 9-2350-366-10-1
Engine access panel removed (WP 0308 00)
Driver's power plant access panel removed (WP 0312 00)
Front VISMOD access panels removed (WP 0307 00)

T

1. Remove plug W1 P1 from VTM jack J1.
2. Hook up VTM to vehicle batteries. See TM 9-4910-571-12&P.
3. Set up Test 91. See TM 9-4910-571-12&P.
4. Remove STE/ICE installation harness 12354672 circuit 758 plug P6 (1) from engine wiring harness 12349873 (2).
5. Measure resistance between plug W1 P1 (3), pins M (4) and i (5).
6. Does VTM read infinity?

NO → GO TO **BY** (PAGE 0100 00-3)

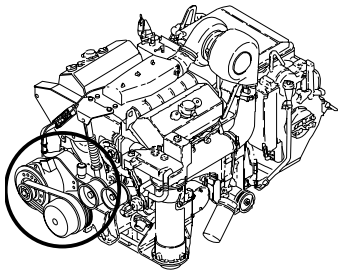

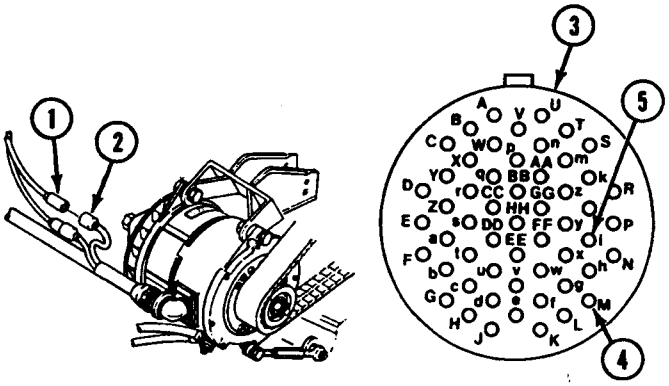

YES

STE/ICE TEST 83 GENERATOR FIELD VOLTAGE DIAGNOSTIC **0100 00**
TROUBLESHOOTING—Continued

Y

1. Install jumper wire between STE/ICE installation harness 12354672 circuit 785 plug P6 and starter ground post (1).
2. Measure resistance between plug W1 P1 (2) pins M (3) and i (4).
3. Does VTM read 0 ohms?

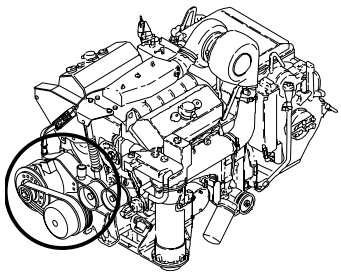

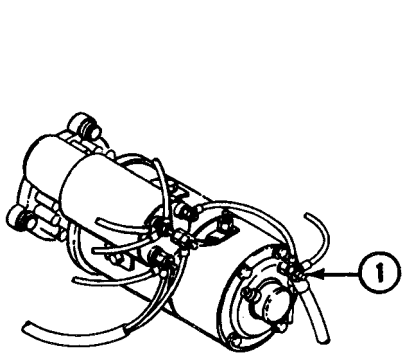

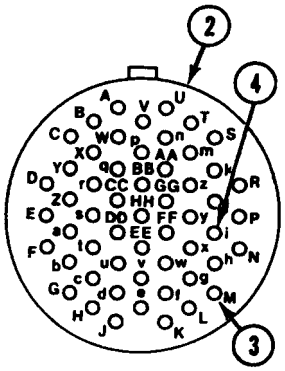

NO → GO TO **CY** (PAGE 0100 00-5)

YES

2Y

1. Faulty VTM.
2. Notify supervisor.

STE/ICE TEST 83 GENERATOR FIELD VOLTAGE DIAGNOSTIC TROUBLESHOOTING—Continued **0100 00**

BY

1. Remove plug W1 P2 (1) from STE/ICE distribution box jack J2 (2).
2. Measure resistance between STE/ICE distribution box jack J2 (2), pins M (3) and O (4).
3. Does VTM read infinity?

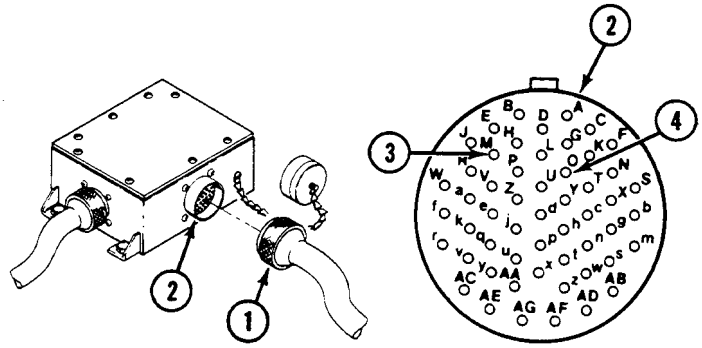

NO

BYN

1. Faulty W1 cable. Beyond unit maintenance repair.
2. Notify supervisor.

YES

B2Y

1. Remove STE/ICE wiring harness 12354593 plug P1 (1) from STE/ICE distribution box jack J1 (2).
2. Measure resistance between 12354593 plug P1 (1), pins f (3) and E (4). VTM should read infinity.
3. Does VTM indicate a fault?

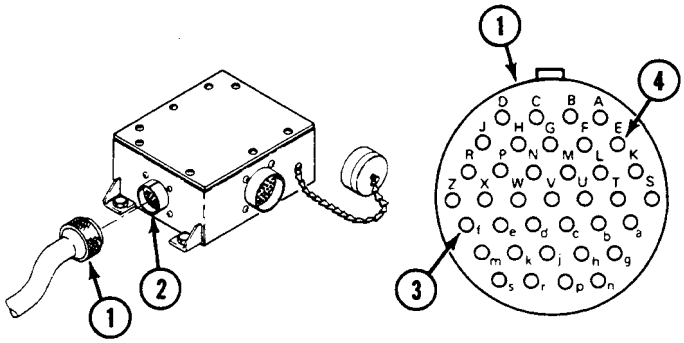

NO

B2YN

1. Replace STE/ICE distribution box (WP 0387 00).
2. Verify no faults found.

YES

STE/ICE TEST 83 GENERATOR FIELD VOLTAGE DIAGNOSTIC TROUBLESHOOTING—Continued **0100 00**

B3Y

1. Remove STE/ICE wiring harness 12354672 plug P4 (1) from harness 12354593 jack J1 (2).
2. Measure resistance between harness 12354672 plug P4 (1), pins l (3) and E (4). VTM should read infinity.
3. Does VTM indicate a fault?

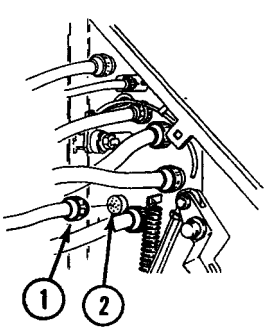

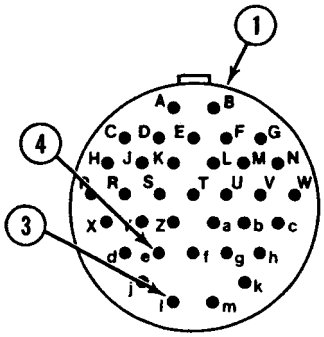

NO

B3YN

1. Replace wiring harness 1235493 (WP 0388 00).
2. Verify no faults found.

YES

B4Y

1. Replace engine wiring harness 12354672 (WP 0191 00)
2. Verify no faults found.

STE/ICE TEST 83 GENERATOR FIELD VOLTAGE DIAGNOSTIC TROUBLESHOOTING—Continued **0100 00**

CY

1. Remove plug W1 P2 (1) from STE/ICE distribution box jack J2 (2).
2. Measure resistance between STE/ICE distribution box jack J2 (2), pins M (3) and O (4). VTM should read 0 ohms.
3. Does VTM indicate a fault?

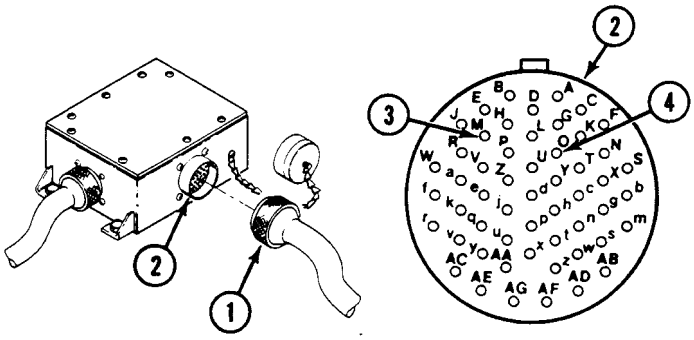

NO →

CYN

1. Faulty W1 cable. Beyond unit maintenance repair.
2. Notify supervisor.

YES ↓

C2Y

1. Remove harness 12354593 P1 (1) from STE/ICE distribution box jack J1 (2).
2. Measure resistance between 12354593 plug P1 (1), pins f (3) and E (4). VTM should read 0 ohms.
3. Does VTM indicate a fault?

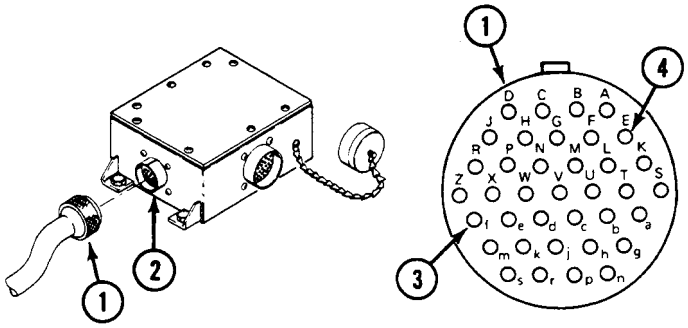

NO →

C2YN

1. Replace STE/ICE distribution box (WP 0387 00).
2. Verify no faults found.

YES ↓

STE/ICE TEST 83 GENERATOR FIELD VOLTAGE DIAGNOSTIC TROUBLESHOOTING—Continued **0100 00**

C3Y

1. Remove harness 12354672 P4 (1) from harness 12354593 jack J1 (2).
2. Measure resistance between harness 12354672 plug P4 (1), pin l and pin E. VTM should read 0 ohms.
3. Does VTM indicate a fault?

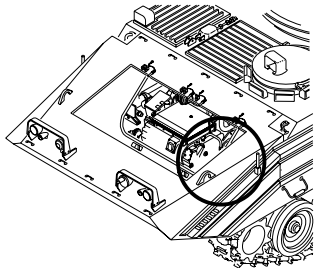

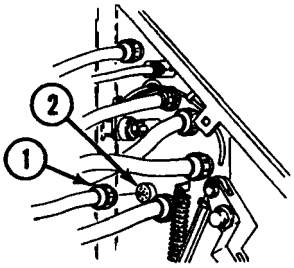

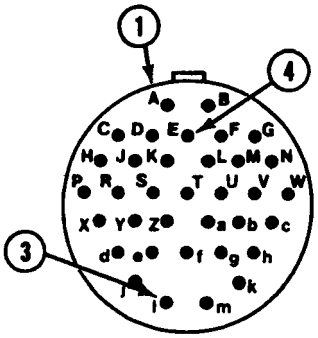

NO

C3YN

1. Replace wiring harness 12354593 (WP 0388 00).
2. Verify no faults found.

YES

C4Y

1. Replace wiring harness 12354672 (WP 0389 00).
2. Verify no faults found.

STE/ICE TEST 84 GENERATOR NEGATIVE CABLE VOLTAGE DROP DIAGNOSTIC TROUBLESHOOTING 0101 00

INITIAL SETUP:

Maintenance Level

Unit

Tools and Special Tools

Electrical Connector Pliers (WP 0397 00, Item 31)
Jumper Wire
STE/ICE Test Set (WP 0397 00, Item 60)

Personnel Required

Unit Mech 63T10
Helper (H)

References

TM 9-2350-366-10-1
TM 9-4910-571-12&P

Equipment Condition

Engine stopped TM 9-2350-366-10-1
Vehicle blocked TM 9-2350-366-10-1
Engine access panel removed (WP 0308 00)
Driver's power plant access panel removed (WP 0312 00)
Front VISMOD access panel removed (WP 0307 00)

T

1. Remove plug W1 P1 from VTM jack J1.
2. Hook up VTM to vehicle batteries TM 9-4910-571-12&P.
3. Set up Test 91 TM 9-4910-571-12&P.
4. Measure resistance between plug W1 P1 (1) pins W (2) and P (3).
5. Does VTM read less than one ohm?

NO → GO TO **BY** (PAGE 0101 00-3)

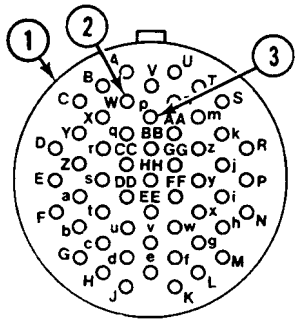

YES

STE/ICE TEST 84 GENERATOR NEGATIVE CABLE VOLTAGE DROP DIAGNOSTIC TROUBLESHOOTING—Continued **0101 00**

Y

1. Remove nut (1), lockwasher (2), and harness 12354672 circuit 771 terminal end E2 (3) from generator ground stud (4).
2. Wrap harness 12354672 circuit 771 terminal end E2 (3) with tape.
3. Measure resistance between plug W1 P1 (5), pins W (6) and P (7).
4. Does VTM read infinity?

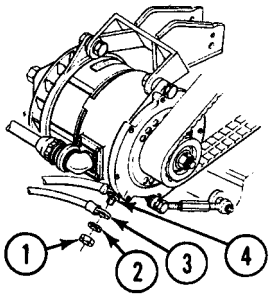

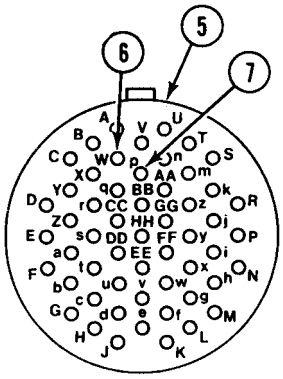

NO → GO TO **CY** (PAGE 0101 00-5)

YES

2Y

1. Faulty VTM.
2. Notify supervisor.

STE/ICE TEST 84 GENERATOR NEGATIVE CABLE VOLTAGE DROP DIAGNOSTIC TROUBLESHOOTING—Continued **0101 00**

BY

1. Remove plug W1 P2 (2) from STE/ICE distribution box jack J2 (1).
2. Measure resistance between STE/ICE distribution box jack J2 (1), pins W (3) and P (4).
3. Does VTM read more than one ohm?.

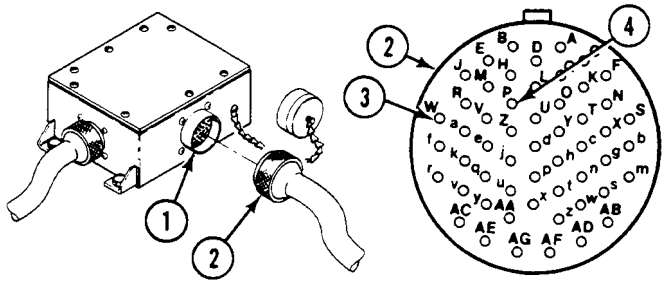

NO

BYN

1. Faulty W1 cable. Beyond unit maintenance repair.
2. Notify supervisor.

YES

B2Y

1. Remove harness 12354593 plug P1 (1) from STE/ICE distribution box jack J1 (2).
2. Measure resistance between 12354593 plug P1 (1), pins k (3) and e(4). Use VTM.
3. Does VTM read more than one ohm?

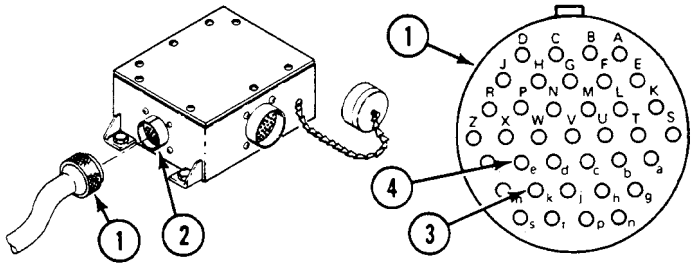

NO

B2YN

1. Replace STE/ICE distribution box (WP 0387 00).
2. Verify no faults found.

YES

B3Y

1. Remove harness 12354672 P4 (1) from harness 12354593 jack J1 (2).
2. Measure resistance between harness 12354672 plug P4 (1), pins m (3) and ground.
3. Does VTM read more than one ohm?

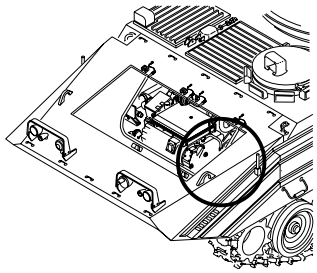

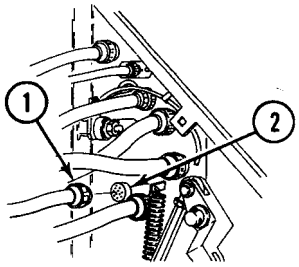

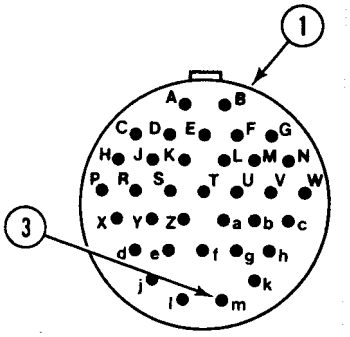

NO

B3YN

1. Replace wiring harness 12354593 (WP 0388 00).
2. Verify no faults found.

YES

B4Y

1. Replace wiring harness 12354572 (WP 0389 00).
2. Verify no faults found.

STE/ICE TEST 84 GENERATOR NEGATIVE CABLE VOLTAGE DROP DIAGNOSTIC TROUBLESHOOTING—Continued **0101 00**

CY

1. Remove plug W1 P2 (2) from STE/ICE distribution box jack J2 (1).
2. Measure resistance between STE/ICE distribution box jack J2 (1), pins W (3) and P (4).
3. Does VTM fail to read infinity?

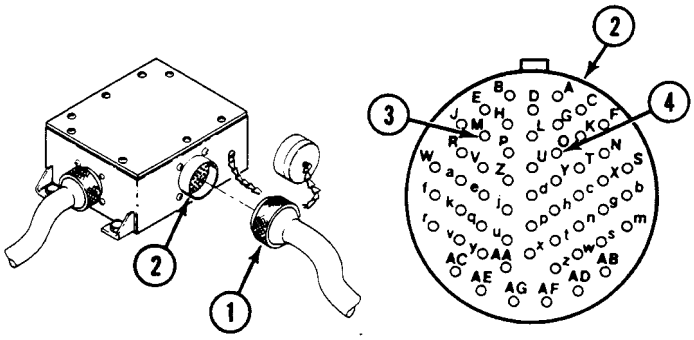

NO →

CYN

1. Faulty W1 cable. Beyond unit maintenance repair.
2. Notify supervisor.

YES ↓

C2Y

1. Remove harness 12354593 P1 (1) from STE/ICE distribution box jack J1 (2).
2. Measure resistance between 12354593 plug P1 (1), pins k (3) and e (4).
3. Does VTM fail to read infinity?

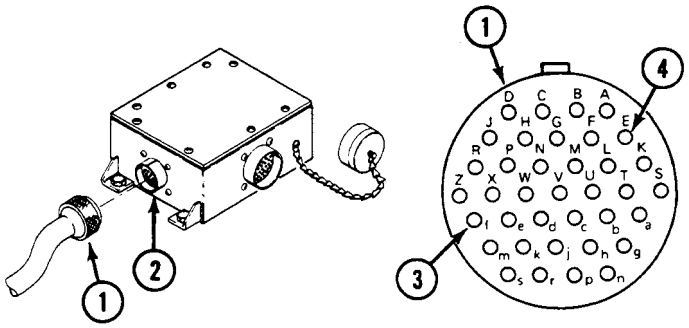

NO →

C2YN

1. Replace STE/ICE distribution box (WP 0387 00).
2. Verify no faults found.

YES ↓

C3Y

1. Remove harness 12354672 P4 (1) from harness 12354593 jack J1 (2).
2. Measure voltage between harness 12354672 plug P4 (1), pin M (3) and ground.
3. Does VTM read other than infinity?

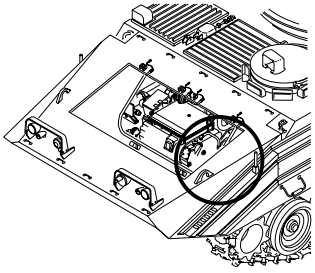

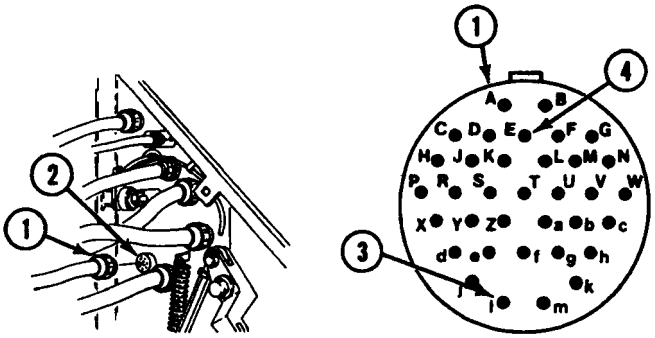

NO

C3YN

1. Replace wiring harness 12354593 (WP 0388 00).
2. Verify no faults found.

YES

C4Y

1. Replace wiring harness 12354672 (WP 0389 00).
2. Verify no faults found.

STE/ICE SCHEMATIC 0102 00

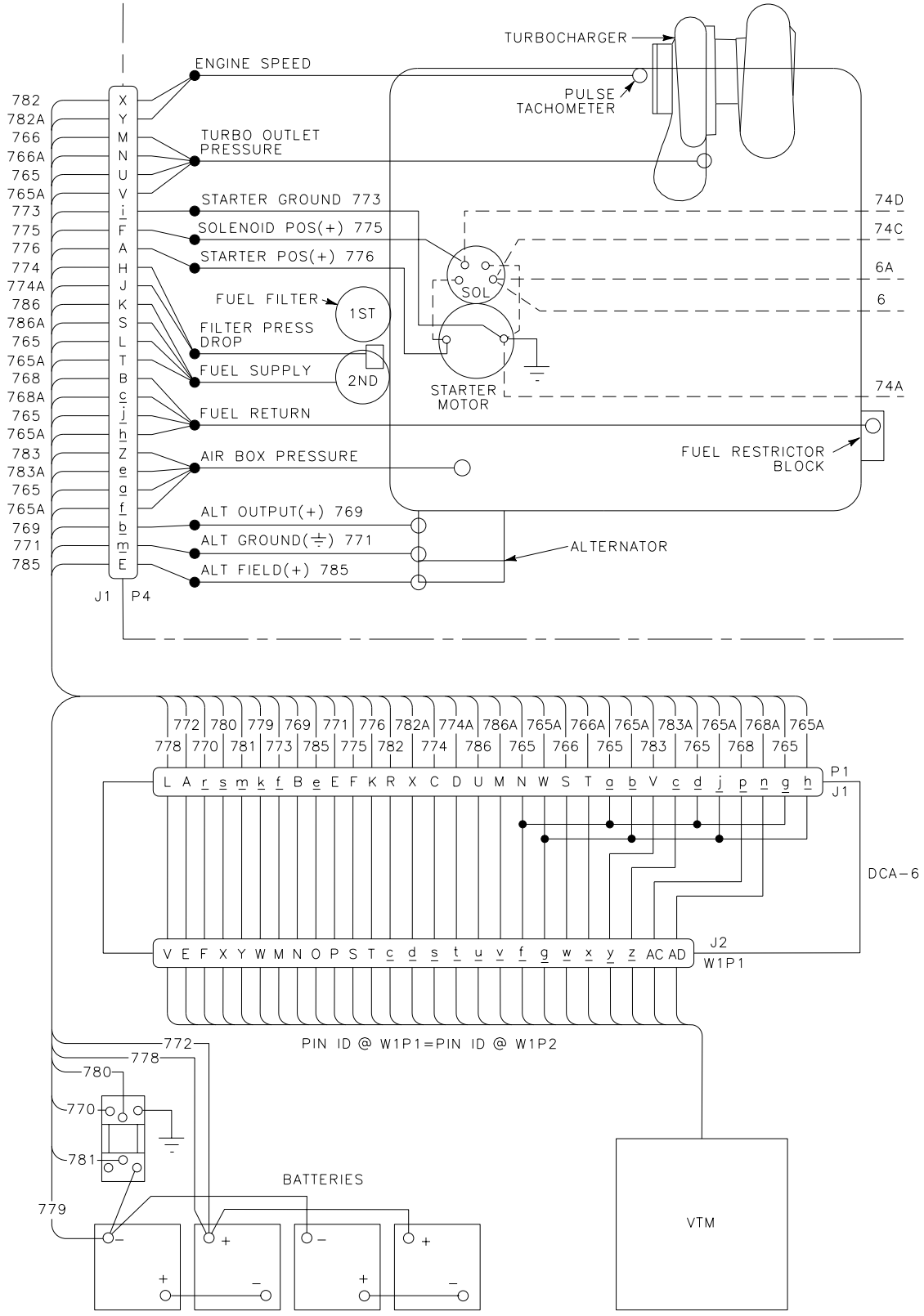

CHAPTER 3

UNIT MAINTENANCE INSTRUCTIONS FOR VEHICLE HULL — GENERAL

WORK PACKAGE INDEX

Title	Sequence No.
SERVICE UPON RECEIPT	0103 00
PREVENTIVE MAINTENANCE CHECKS AND SERVICES	0104 00
REPLACE DATAPLATES, STENCILS, MARKERS, AND DECALS	0105 00

SERVICE UPON RECEIPT 0103 00

THIS WORK PACKAGE COVERS:

Preliminary Checks and Adjustments (page 0103 00-1).

INITIAL SETUP:

Maintenance Level

Unit

PRELIMINARY CHECKS AND ADJUSTMENTS

1. Inspect equipment for possible damage incurred during shipment. If equipment has been damaged, report the damage on SF 364, Report of Discrepancy (ROD).
2. Check equipment against the packing slip to see if shipment is complete. Report all differences using the procedure given in DA PAM 738-750.
3. Check DA Form 2408-5 in vehicle logbook to see whether the turret equipment has been modified.
4. When a new or reconditioned hull subsystem is received, the using organization must determine that the subsystem is complete, has been properly prepared for service by the preparing activity, and is capable of performing its mission by performing a complete PMCS. For PMCS, see TM 9-2350-366-10-1 and TM 9-2350-366-10-2.

END OF TASK

PREVENTIVE MAINTENANCE CHECKS AND SERVICES 0104 00

THIS WORK PACKAGE COVERS:

Monthly (Table 1, page 0104 00-5)
Semiannually or 1500 miles (Table 2, page 0104 00-7)

INITIAL SETUP:

Maintenance Level
Unit

Personnel Required
Track Commander
Driver
Unit Maintainer

References
TM 9-2350-366-10-1

Equipment Condition
Vehicle parked (TM 9-2350-366-10-1)
Turret shut down (TM 9-2350-366-10-2)

SCOPE

This section details preventive maintenance checks and services (PMCS) required for the hull (automotive parts). See TM 9-2350-366-10-1 for crew level PMCS for hull and TM 9-2350-366-10-2 for crew level PMCS required for turret. Your PMCS table has been provided so you can keep your equipment in good operating condition and ready for its primary mission.

MAINTENANCE FORMS AND RECORDS

Every mission begins and ends with paperwork. There isn't much of it, but you have to keep it up. The forms and records you fill out have many uses. They are a permanent record of the services, repairs, and changes made to your vehicle. They are reports to unit maintenance and to your track commander. They are checklists that tell you whether those faults have been repaired. For information on forms and records, see DA PAM 738-750.

WARNINGS AND CAUTIONS

Always observe the WARNINGS and CAUTIONS appearing in your PMCS table BEFORE, DURING, and AFTER you operate the equipment. The WARNINGS and CAUTIONS appear before certain procedures. You must observe these WARNINGS and CAUTIONS to prevent serious injury to yourself and others or to prevent your equipment from being damaged.

EXPLANATION OF TABLE ENTRIES

Item Number Column — Numbers in this column are for reference. When completing DA Form 2404 (Equipment Inspection and Maintenance Worksheet), including the item number for the check/service indicating a fault. Item numbers also appear in the order that you must do checks and services for the intervals listed.

Interval Column — This column tells you when you must do the procedure in the *procedure* column. MONTHLY procedures must be performed every 30 days. SEMI-ANNUAL checks are performed every six months or after 1500 MILES (2400 KM) of operation.

Man-hour Column— Man-hours required to complete all prescribed lubrication are shown to the nearest tenth of an hour.

Item To Be Checked or Serviced Column — This column lists the item to be checked or serviced.

Crewmember/Procedure Column — This column gives the procedure you must do to check or service the item listed in the Item To Be Checked or Serviced column to know if the equipment is ready or available for its intended mission or for operation. You must do the procedure at the time stated in the interval column. Carefully follow these instructions. If you do not have the tools, or if the procedure tells you to, have unit maintenance do the work.

Equipment Not Ready/Available If: Column — Information in this column tells you what faults will keep your equipment from being capable of performing its primary mission. If you make check and service procedures that show faults listed in this column, do not operate the equipment. Follow standard operating procedures for maintaining the equipment or reporting equipment failure.

If you find something wrong when performing PMCS, fix it if you can using Troubleshooting Procedures (WP 0005 00) or maintenance procedures. Notify direct support maintenance if you can't fix it.

PMCS GENERAL INSTRUCTIONS

Tools/Materials

Always do your PMCS in the same order so it gets to be a habit. With practice, you'll spot anything that is wrong. Take along the tools you will need to make all the checks. You will always need wiping rags.

Cleaning

Keep hull clean. Dirt, grease, oil, and debris only get in the way, and may cover up a serious problem. Clean hull as you work and as needed. Name, caution, and instruction plates should be easy to read. If they are dirty, corroded, clean them and coat them with lacquer. See TM 43-0139 for instructions. If you clean the hull or weapons, be sure to observe all information in the following paragraph.

WARNING

P-D-680 solvent, dry cleaning solvent, benzene (benzol), paint thinner, gasoline, and diesel fuel oil can burn, poison soldiers, and damage equipment.

Use the approved cleaning solvent. Follow the instructions for this section.

WARNING

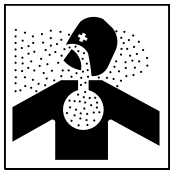

Solvent fumes and fluid are poisonous and can cause skin irritation.

Solvent may be harmful if swallowed. Avoid skin contact and breathing of fumes. Read solvent warning at the front of this manual.

WARNING

Solvent evaporates rapidly and makes fumes that are flammable.

Do not smoke or allow open flames near solvent fumes.

Read solvent warning at the front of this manual.

CAUTION

Steam, water, or air under pressure can damage sighting and fire control equipment gears and bearings. Do not clean inside of turret with steam, water, or air under pressure.

CAUTION

Water entering engine exhaust system can damage engine. Do not allow water to enter engine exhaust system.

CAUTION

Petroleum products will damage rubber that is not resistant to petroleum. Do not get petroleum products on rubber parts.

Use cleaning solvent WP 0399 00, Item 17 on metal surfaces. Use scrubbing soap and water when you clean rubber or plastic surfaces. Use clean water or lens cleaning solution when you clean optical surfaces.

Lubrication. Perform all lubrication in accordance with TM 9-2350-366-10-1.

General Inspection

Hardware: Check bolts, nuts, and screws for looseness and missing, bent, or broken parts. If you find a loose one, tighten it. If you can't tighten it, notify direct support maintenance. Look for chipped paint, bare metal, or rust around bolt heads.

Welds: Look for loose or chipped paint, rust, cracks, or gaps where parts are welded together. If you find a bad weld, notify direct support maintenance.

Electrical Wires and Connectors: Look for cracked or broken insulation, bare wires, and loose or broken connectors. Tighten loose connectors. Make sure wires are in good shape. If you find cracked or broken insulation, bare wires, or broken connectors, notify direct support maintenance.

Straps: Look for rubber hold-down straps that are cracked, broken, or hardened. Look for webbing stowage straps that are frayed, worn, or have missing metal ends. If you find any bad straps, notify direct support maintenance.

Hoses and fluid lines: Look for wear, damage, and leaks. Make sure clamps and fittings are tight. Wet spots show leaks. A stain around a fitting or connector can also mean there is a leak. If a leak comes from a loose fitting or connector, tighten each fitting or connector. If something is broken or worn out, notify direct support maintenance.

YOU NEED TO KNOW HOW FLUID LEAKS AFFECT YOUR VEHICLE. DEFINITIONS OF THE TYPES AND CLASSES OF LEAKS ARE GIVEN BELOW. YOU NEED TO KNOW THEM TO DETERMINE THE CONDITION OF YOUR VEHICLE. LEARN THEM. REMEMBER: WHEN IN DOUBT, NOTIFY DIRECT SUPPORT MAINTENANCE!

NOTE

You are allowed to operate equipment with minor leaks (Class I or II). How much fluid each item or system being checked or inspected can hold must be considered. When in doubt, notify direct support maintenance. When operating equipment with Class I or II leaks, continue to check fluid levels as required in your PMCS. Report Class III leaks to direct support maintenance for corrective action right away.

CLASS I	Seepage of fluid is not great enough to form drops, but is shown by wetness or color changes.
CLASS II	Leakage of fluid is great enough to form drips, but drops do not drip from the item being checked or inspected.
CLASS III	Leakage of fluid is great enough to form drips that fall from the item being checked or inspected.

ARMY OIL ANALYSIS PROGRAM

SAMPLING REQUIREMENTS FOR ENGINE AND TRANSMISSION

WARNING

Hot parts can burn you.

Allow parts to cool before working on or near them. If necessary, use heat protective gloves to work on hot parts.

NOTE

For shipping instructions and complete information about AOAP, refer to DA PAM 738-750.

Samples may be taken without warming the power unit to operating temperature if the vehicle has been operated within the last 30 days. If the vehicle has not been operated within the last 30 days, operate vehicle until normal temperature is reached. See TM 9-2350-366-10-1. Stop engine. See TM 9-2350-366-10-1. Allow power unit to cool to a “safe to touch temperature” before taking samples. Oil samples must not be taken immediately after oil is added. Operate vehicle until normal operating temperature is reached to completely mix old and new oils. See TM 9-2350-366-10-1. Allow power unit to cool to a “safe to touch temperature” before taking samples.

SAMPLING TECHNIQUE FOR ENGINE AND TRANSMISSION

Valve method: Start engine. After engine has reached operating temperature, stop engine. See TM 9-2350-366-10-1. Open sampling valve and flush a small amount of oil into a waste container to clear valve. Fill the sample bottle to approximately 1/2 inch from top, close valve. When oil sampling valve is not used to take oil sample, use vacuum pump method. See DA PAM 738-750. Do not operate power unit while taking samples.

LUBRICATION TABLES

For PMCS lubrication checks, see TM 9-2350-366-10-1.

Table 1. PREVENTIVE MAINTENANCE CHECKS AND SERVICES FOR THE OSV — MONTHLY

ITEM NO.	INTERVAL	MAN-HOUR	ITEM TO BE CHECKED OR SERVICED	CREWMEMBER PROCEDURE	EQUIPMENT NOT READY/ AVAILABLE IF:
1	Monthly	0.5	Engine, Transmission, and Final Drive AOAP	**NOTE** **Engine and transmission oil must be sampled after 30 days of operation as prescribed in DA PAM 738-750.** **For shipping instructions and complete information about AOAP, refer to DA PAM 738-750.** a. SAMPLING REQUIREMENTS FOR ENGINE AND TRANSMISSION: Samples may be taken without warming power unit to operating temperatures, if vehicle has been operated within the last 30 days. If vehicle has not been operated within the last 30 days, operate until normal operating temperature is reached. Stop engine. Allow power unit to cool to a “safe to touch temperature” before taking samples. Oil samples must not be taken immediately after oil is added. Operate vehicle until normal operating temperature is reached to completely mix oil and new oils. Allow power unit to cool to a “safe to touch temperature” before taking samples. b. OPEN POWER PLANT ACCESS DOORS. See TM 9-2350-366-10-1. **NOTE** **Engine, transmission, and final drive oil samples are taken the same way.**	

ITEM NO.	INTERVAL	MAN-HOUR	ITEM TO BE CHECKED OR SERVICED	CREWMEMBER PROCEDURE	EQUIPMENT NOT READY/ AVAILABLE IF:
				c. Start engine. See TM 9-2350-366-10-1. Open sampling valve and flush a small amount of oil into a waste container to clear valve. Fill a sample bottle to approximately 1/2 inch from the top, close valve. Stop engine. See TM 9-2350-366-10-1. Take oil sample: d. CHECK LEFT AND RIGHT FINAL DRIVE OIL LEVEL. See TM 9-2350-366-10-1. e. CLOSE AND SECURE POWER PLANT ACCESS DOORS. See TM 9-2350-366-10-1.	

Table 2. PREVENTIVE MAINTENANCE CHECKS AND SERVICES FOR THE OSV — SEMIANNUALLY OR 1500 MILES

ITEM NO.	INTERVAL	MAN-HOUR	ITEM TO BE CHECKED OR SERVICED	CREWMEMBER PROCEDURE	EQUIPMENT NOT READY/ AVAILABLE IF:
2	Semiannual or 1500 miles		Road Test	**CAUTION** **Do not allow engine to operate for prolonged periods if outside air temperature is less than 85° F (29°C) and gauge is above 200° F (93°C) or outside air temperature is above 85° F (29°C) and gauge is above 225° F (100°C). Serious damage to engine may result.** **NOTE** **Be sure that all operator level PMCS have been completed prior to performing this PMCS. See TM 9-2350-366-10-1. Any non-mission capable faults must be corrected prior to road tests.** **NOTE** **Check instruments, gauges, and warning lights for normal indications as outlined in TM 9-2350-366-10-1.** **NOTE** **All operator recorded problems should be reviewed prior to road test.** a. Start engine. Perform vehicle road test. Drive vehicle at least 5 miles (8 km). See TM 9-2350-366-10-1. When conditions prevent a road test perform engine idle test (Step 4a.)and governed no load test (Step 5a.).	Any class III leak or damage that would prevent operation of vehicle.

ITEM NO.	INTERVAL	MAN-HOUR	ITEM TO BE CHECKED OR SERVICED	CREWMEMBER PROCEDURE	EQUIPMENT NOT READY/ AVAILABLE IF:
a	Semiannual or 1500 miles		Left and Right Steering	**CAUTION** **Power plant can be damaged. Do not pivot steer when vehicle is moving except in a track failure emergency.** a. Check steering yoke for left and right turns. If vehicle does not turn left or right when steering yoke is turned, troubleshoot steering system (WP 0064 00).	Binding, grabbing, unusual noise, vibration, or vehicle fails to turn.
b	Semiannual or 1500 miles		Steering in Forward and Reverse Range	a. Check steering in forward range and in reverse angle.	If vehicle does not make a complete turn after steering yoke is turned to the left and right, troubleshoot steering system (WP 0051 00).
c	Semiannual or 1500 miles		Carrier Braking	a. Check vehicle braking. If vehicle does not stop when brakes are applied, troubleshoot brake adjustment WP 0052 00.	Vehicle fails to stop.
d	Semiannual or 1500 miles		Carrier Shifting in All Ranges	a. Check shifting of carrier in all ranges. If carrier does not respond properly to selected driving range, troubleshoot gear selection system (WP 0053 00).	Carrier fails to shift into selected range.
e	Semiannual or 1500 miles		Speed	a. When vehicle is at normal temperature, it shall be capable of sustaining the speed of 40 mph.	
f	Semiannual or 1500 miles		Drift	a. The vehicle's directional drift shall not exceed three feet in 100 feet of travel at 25 mph ± 5 mph.	
g	Semiannual or 1500 miles		Acceleration	a. At normal temperature, standing still, with engine at idle rpm and transmission in 1-4 range, the vehicle shall accelerate on a smooth, level, hard surface from zero to 20 mph in 11 seconds or less.	

ITEM NO.	INTERVAL	MAN-HOUR	ITEM TO BE CHECKED OR SERVICED	CREWMEMBER PROCEDURE	EQUIPMENT NOT READY/ AVAILABLE IF:
h	Semiannual or 1500 miles		Turning	a. Verify vehicle can make a 360° turn and pivot right and left. Pivot with selector in PV. The vehicle should be brought to a full stop before reversing direction. Stop engine. See TM 9-2350-366-10-1.	
3	Semiannual or 1500 miles		After Road Test	**WARNING** **Failure to set parking brake and block road wheels can allow vehicle to move and could result in injury or death. Always engage parking brake and block road wheels before working on vehicle.**	
				a. Immediately after road test, cautiously feel all wheel and idler hubs for noticeable difference in temperature between hubs. An overheated hub indicates that bearing is out of adjustment, poorly lubricated or unserviceable.	Any Class III leaks or cold shocks.
				b. Check temperature of shock absorbers. They should feel warm. A cold shock is failed.	
				c. Visually check inside, outside, and underneath vehicle for fuel, oil or hydraulic leaks.	
4	Semiannual or 1500 miles		Idle Test	**CAUTION** **Avoid lengthy engine idling. This causes coolant temperature to drop below operating temperature and can shorten engine life.**	
				a. Run engine at 800 rpm for 3-5 minutes with range selector in 2-3 range and brakes locked until operating temperature is reached.	Engine runs hot or rough.

ITEM NO.	INTERVAL	MAN-HOUR	ITEM TO BE CHECKED OR SERVICED	CREWMEMBER PROCEDURE	EQUIPMENT NOT READY/ AVAILABLE IF:
				b. If outside temperature is less than 85°F (29°C), normal operating temperature should be 160°F to 200°F (71° to 93°C). If outside air temperature is greater than 85°F (29°C), normal operating temperature should be 160° to 235°F (71° to 107°C)	
				c. With range selector in SL, engine should idle smoothly at 650 to 700 rpm.	Tachometer above 700 or below 650 rpm.
				d. High or low engine idle speed is usually caused by accelerator linkage being out of adjustment. Adjust linkage if necessary.	
				e. Rough idling is usually caused by faulty injector timing and rack setting, faulty injectors, or air in fuel injection system. Notify direct support maintenance.	
5	Semiannual or 1500 miles		Governed No Load Test	a. Run engine at 800 rpm for 3-5 minutes with range selector in 1 range and brakes locked until normal engine operating temperature is reached. Engine runs hot or rough.	
				b. If outside air temperature is less than 85°F (29°C), normal operating temperature should be 160°F to 200°F (71° to 93°C). If outside air temperature is greater than 85°F (29°C), normal operating temperature should be 160°F to 225°F (71° to 107°C).	
				c. With range selector in SL, slowly open throttle control until accelerator is fully depressed. **CAUTION** **When you suspect a faulty governor, do not exceed 3,000 rpm engine speed for more than 2 or 3 seconds.**	
				d. Engine speed may exceed 3,000 rpm momentarily, but should stabilize at 2,925 to 2,975 rpm.	If governor cuts in and out, or surges at this speed, adjustments are needed.

ITEM NO.	INTERVAL	MAN-HOUR	ITEM TO BE CHECKED OR SERVICED	CREWMEMBER PROCEDURE	EQUIPMENT NOT READY/ AVAILABLE IF:
6	Semiannual or 1500 miles or On Condition		Engine and Transmission Oil	**NOTE** **If AOAP laboratory is not available, drain engine oil and change filter element/gasket every 150 hours/1,500 miles or semi-annually. Transmission oil should be drained and filter element/gaskets changed every 150 hours/1,500 miles or semi-annually. See AOAP TB 43-0211.** **NOTE** **Engine and transmission filters need to be replaced every 150 hours/1,500 miles or semi-annually, even when following AOAP procedures.** a. With engine at idle, sample engine and transmission oil. **WARNING** **Hot parts can burn you.** **Allow parts to cool before working on or near them. If necessary, use heat protective gloves to work on hot parts.** **NOTE** **Drain oil only when hot after operation. Allow oil to drain for one hour if time permits.**	AOAP recommends oil change.

ITEM NO.	INTERVAL	MAN-HOUR	ITEM TO BE CHECKED OR SERVICED	CREWMEMBER PROCEDURE	EQUIPMENT NOT READY/ AVAILABLE IF:
				b. Hardtime interval can be shortened if equipment operates under adverse conditions (for Arctic operations, refer to FM 9-207, for Desert operations, refer to FM 90-30). Refer to lubrication chart. See TM 9-2350-366-10-1. c. To drain engine or transmission oil, remove bottom access cover and drain plugs. Inspect drain plug and oil for metal particles. Replace engine or transmission oil filters each time an oil change is required. **CAUTION** **Engine and transmission can be damaged if filled above full (F) mark on gauge rods.** **NOTE** **Visual inspection of engine or transmission should not be justification for changing oil. Detergent oils may appear dark in color due to additives.** **Do not mix OE/HDO-15 W40 with single grade lubricants.** **Change oil and filters when converting from OE/HDO to OEQA, PE30-1 to OE/HDO, PE10-1 to OE/HDO. See engine and transmission temperature key charts. Refer to lubrication chart. See TM 9-2350-366-10-1.** d. Refill engine and check oil level with approximately 22 quarts of OE/HDO or OEA. Bring level between full (F) and low (L) marks on gauge rod. e. Refill transmission and check oil level with approximately 36 quarts (refill after oil change) or 57 quarts (initial fill) of OE/HDO or OEA. Bring level between full and add mark on gauge rod. f. Run engine and check for oil leaks and filter and drain. See TM 9-2350-366-10-1. Inspect access covers on hull bottom and replace if required. Install access covers.	

ITEM NO.	INTERVAL	MAN-HOUR	ITEM TO BE CHECKED OR SERVICED	CREWMEMBER PROCEDURE	EQUIPMENT NOT READY/ AVAILABLE IF:
				g. Clean and inspect transmission breather (46a.).	
7	Semiannual or 1500 miles		Track Pin/Nuts	a. Check track pin nuts for looseness or cracks. Replace cracked nuts. Check track pins for stripped threads. Replace stripped track pins. Tighten loose nuts to 115-135 lb-ft (156-183 N·m) torque. Use torque wrench.	Any pins/nuts that are cracked, broken, bent, stripped, missing, or protruding.
				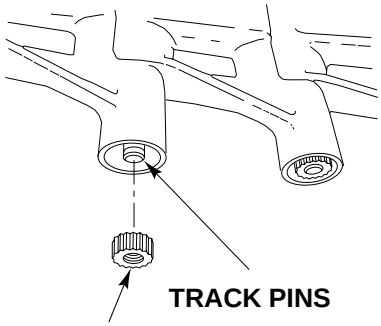	
8	Semiannual or 1500 miles		Track Grouser	a. Check grouser for wear or cracks on both tracks. Replace track shoe if grouser measures less than 1/8” (3 mm) in height or if is cracked.	Grouser is worn below 1/8” or cracked.
				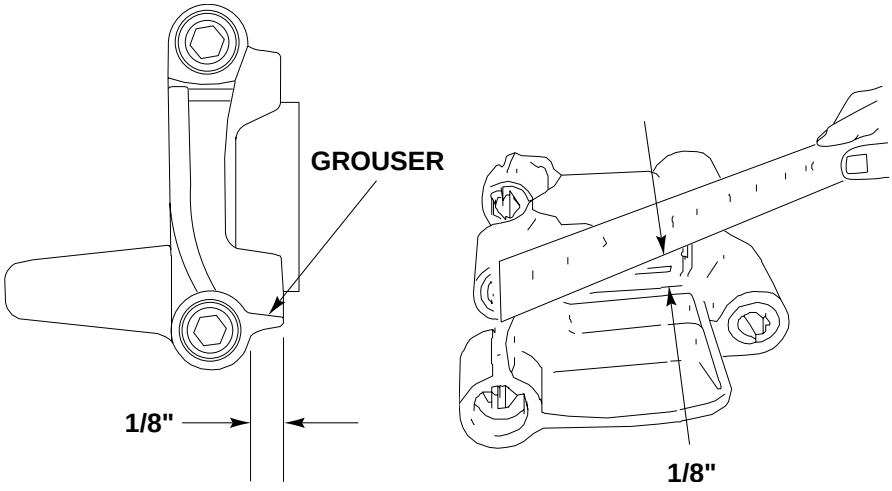	

ITEM NO.	INTERVAL	MAN-HOUR	ITEM TO BE CHECKED OR SERVICED	CREWMEMBER PROCEDURE	EQUIPMENT NOT READY/ AVAILABLE IF:
9	Semiannual or 1500 miles		Track Shoe Pads and Mounting Studs/Nuts	a. Check track shoe pads and mounting for looseness and stripped threads on both tracks. Replace track shoe pad. Tighten loose nuts to 135-155 lb-ft (183-210 N·m) torque. Use torque wrench.	Studs/nuts are cracked, stripped, missing, or pad height is less than 1/16” above grouser.

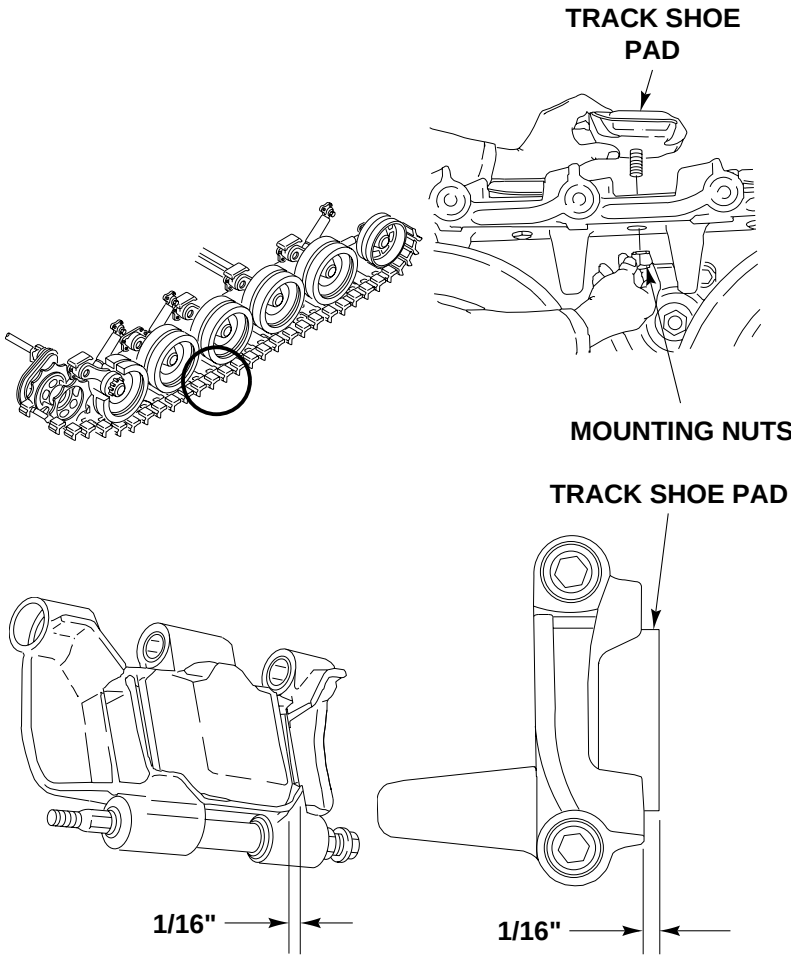

ITEM NO.	INTERVAL	MAN-HOUR	ITEM TO BE CHECKED OR SERVICED	CREWMEMBER PROCEDURE	EQUIPMENT NOT READY/ AVAILABLE IF:
				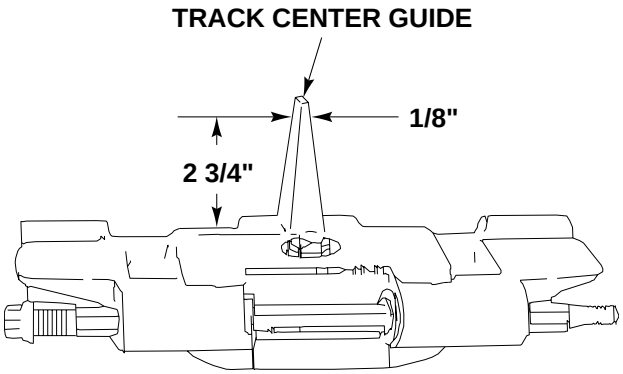	
10	Semiannual or 1500 miles		Track Tension Adjuster Mounting Hardware	a. Check track tension adjuster for broken hardware or cracks on both sides of the vehicle. Replace adjuster if either end is cracked or broken. Replace broken adjuster mount. **NOTE** **See WP 0400 00 for proper use of torque wrench adapters.** b. Replace missing track tension adjuster screws. Tighten loose screws to 130-140 lb-ft (176-190 N·m) torque. Use torque wrench adapter and torque wrench.	Hardware is broken, cracked, missing, or stripped.
				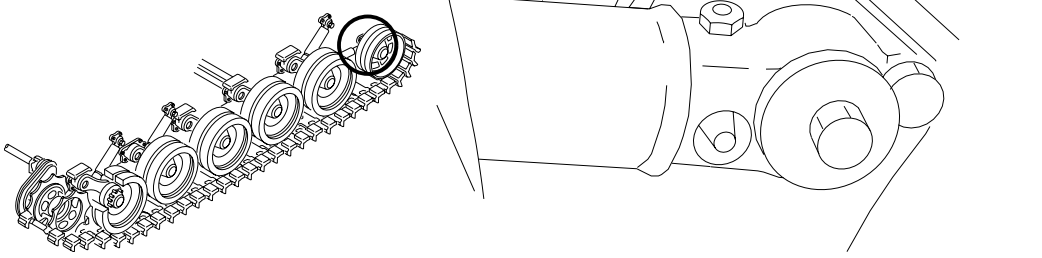	

ITEM NO.	INTERVAL	MAN-HOUR	ITEM TO BE CHECKED OR SERVICED	CREWMEMBER PROCEDURE	EQUIPMENT NOT READY/ AVAILABLE IF:
11	Semiannual or 1500 miles		Track Tension Adjuster Collar Leaks	a. Check for leaks around grease fittings, relief valve, and collar of track tension adjuster. Replace leaking track adjuster.	Any leaks or fitting will not accept grease.
				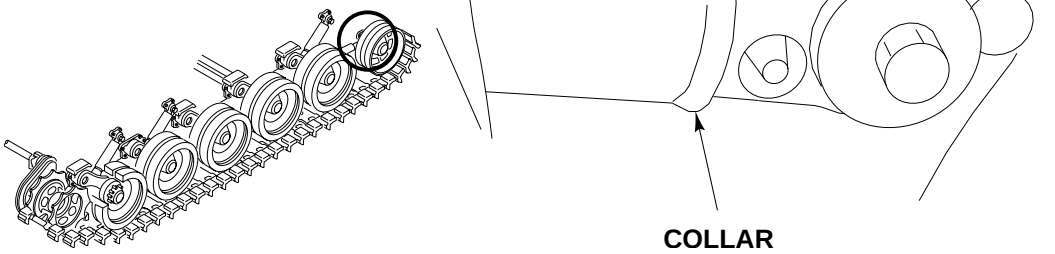	
12	Semiannual or 1500 miles		Sprocket Mounting Screws	a. Check sprockets on both tracks for wear indicating that mounting screws have come loose. Tighten loose screws to 110-115 lb-ft (149-156 N·m) torque. Use torque wrench. b. Check sprocket cushions for wear. Replace cushions if gouges, chips, or cuts cause thumping.	Any screws are missing, loose, or worn.

ITEM NO.	INTERVAL	MAN-HOUR	ITEM TO BE CHECKED OR SERVICED	CREWMEMBER PROCEDURE	EQUIPMENT NOT READY/ AVAILABLE IF:
	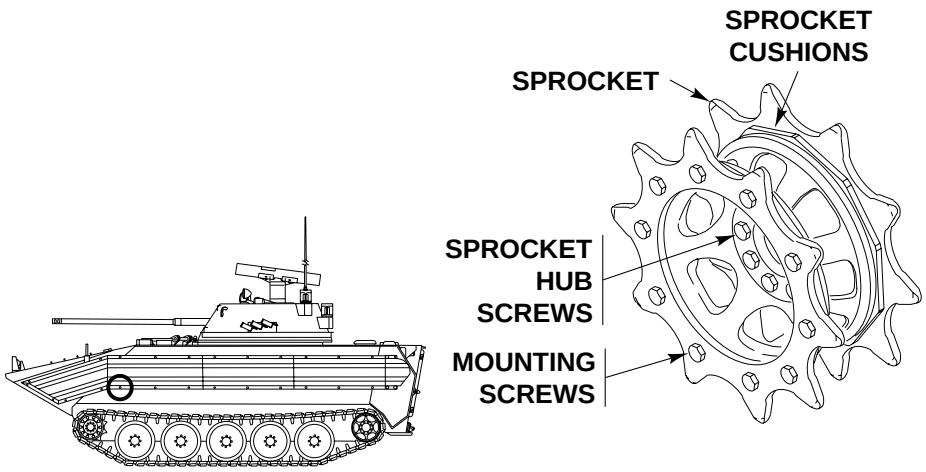				
13	Semiannual or 1500 miles		Sprocket Hub Screws	a. Check sprocket hub screws for looseness or missing screws. Tighten loose screws to 170-190 lb-ft (231-258 N·m) torque. Use torque wrench. Replace missing screws.	Any screws are missing, loose, or worn.
14	Semiannual or 1500 miles		Final Drive	a. Tighten loose final drive-to-hull screws to 75-85 lb-ft (101-115 N·m) torque. Use torque wrench.	
				b. Drain final drive every 150 hours/1,500 miles or semiannually. Remove and inspect drain plugs from bottom of housing. Inspect oil and drain plugs for metallic particles. If chips are found, notify direct support maintenance.	
				c. Refill final drives with OE/HDO or OEA as applicable. Check oil level for proper amount between full and add marks on gauge rods.	Oil is contaminated with metal chips or particles.

ITEM NO.	INTERVAL	MAN-HOUR	ITEM TO BE CHECKED OR SERVICED	CREWMEMBER PROCEDURE	EQUIPMENT NOT READY/ AVAILABLE IF:
15	Semiannual or 1500 miles		Idler and Road Wheel Arms	a. Replace cracked or bent idler or road wheel arms. Replace idler or road wheel arm relief valves and grease fittings if leaking. Replace leaking road wheel arms seals and gaskets.	Any bent, broken, or cracked arm or leaking seal.
				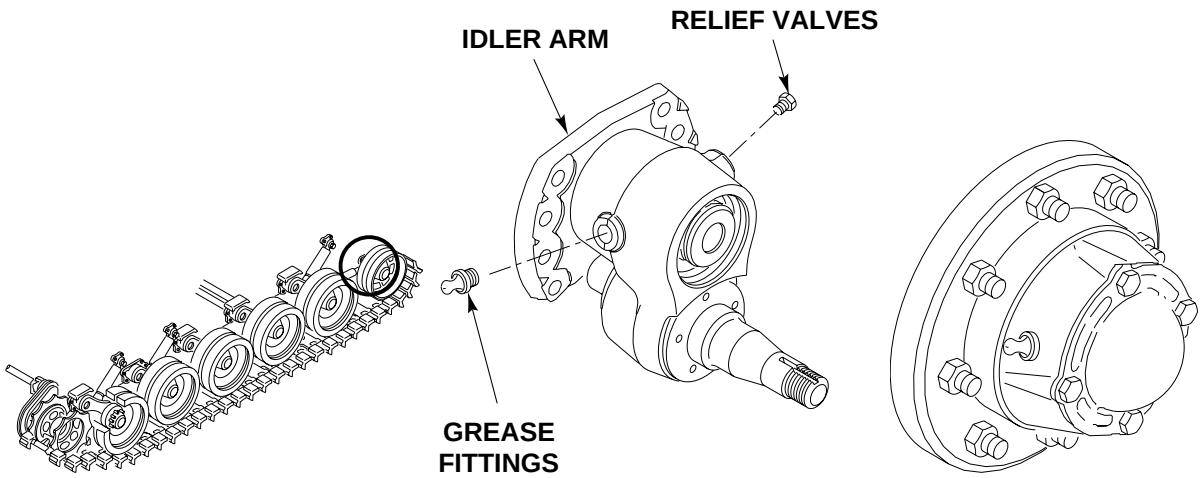	
16	Semiannual or 1500 miles		Idler and Road Wheel Mounting Nuts	a. Check idler and road wheel mounting nuts for looseness. Tighten loose nuts to 150-170 lb-ft (203-230 N·m) torque. Use torque wrench.	Any missing or stripped nuts.
17	Semiannual or 1500 miles		Idler, Road Wheels, and Idler/Road Wheel Hubs	a. Replace cracked, broken, or bent idler/road wheels and idler/road wheel hubs. Refer to page for road wheel components.	Any cracked, broken, or bent idler/road wheels or leaking hub seals.
				b. At each service, or whenever track is removed, adjust the wheel bearings if looseness or end play is observed.	Number one or number five wheel bearing loose.
				c. Replace leaking seals and gaskets.	
				d. Replace grease fittings and relief valves if they are leaking.	Leaky grease fittings.

ITEM NO.	INTERVAL	MAN-HOUR	ITEM TO BE CHECKED OR SERVICED	CREWMEMBER PROCEDURE	EQUIPMENT NOT READY/ AVAILABLE IF:

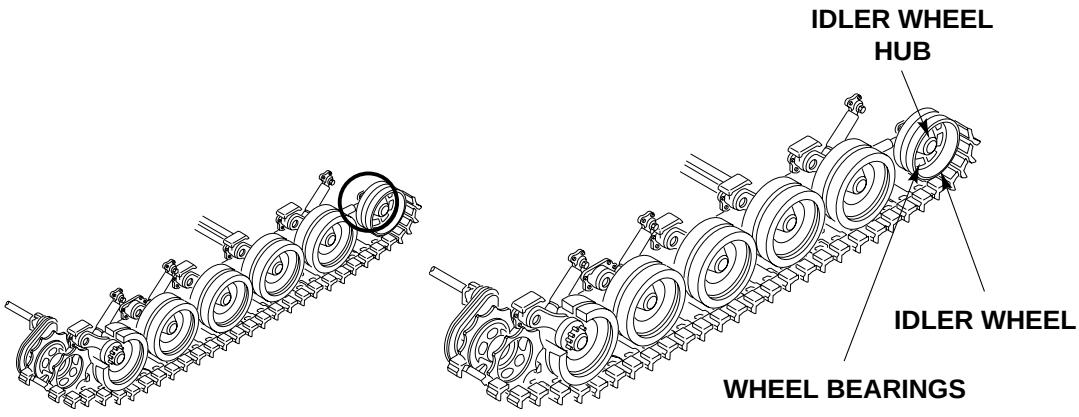

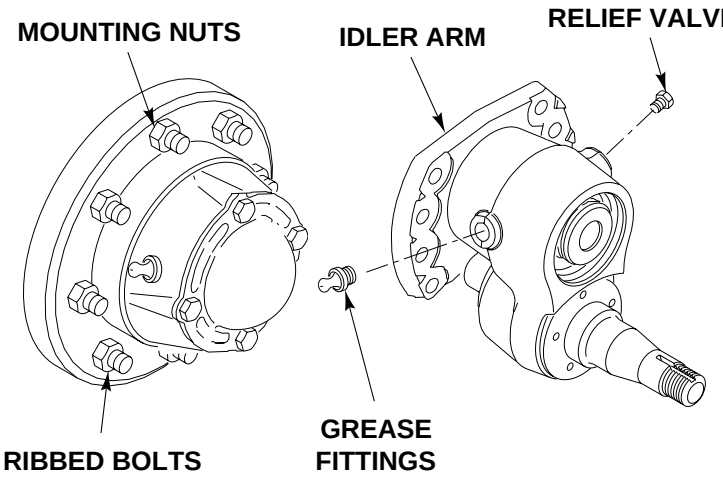

18	Semiannual or 1500 miles		Idler and Road Wheel Hub Ribbed Bolts	a. Replace bent, broken, or stripped idler or road wheel hub ribbed bolts. Refer to page for idler components.	Any stripped, broken, or bent bolts.

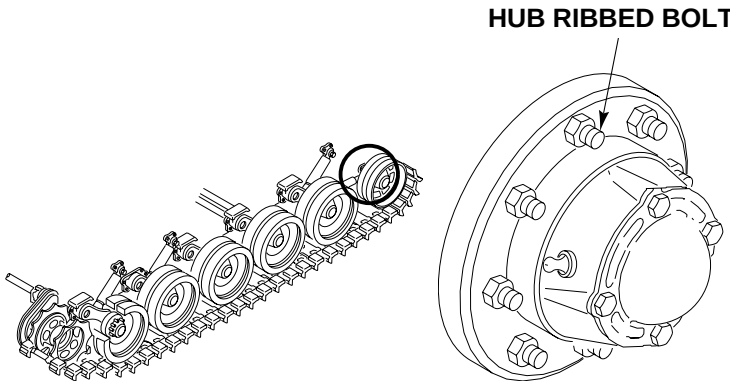

ITEM NO.	INTERVAL	MAN-HOUR	ITEM TO BE CHECKED OR SERVICED	CREWMEMBER PROCEDURE	EQUIPMENT NOT READY/ AVAILABLE IF:
19	Semiannual or 1500 miles		Road Wheel Arm Mounting Hardware	a. Tighten loose road wheel arm mounting hardware to 130-140 lb-ft (176-190 N·m) torque. Use torque wrench.	Any loose mounting hardware.
20	Semiannual or 1500 miles		Road Wheel Arm Mounting Holes	a. If road wheel mounting holes extend beyond head of mounting nut, replace road wheel.	Any elongated holes that extend beyond mounting nuts.

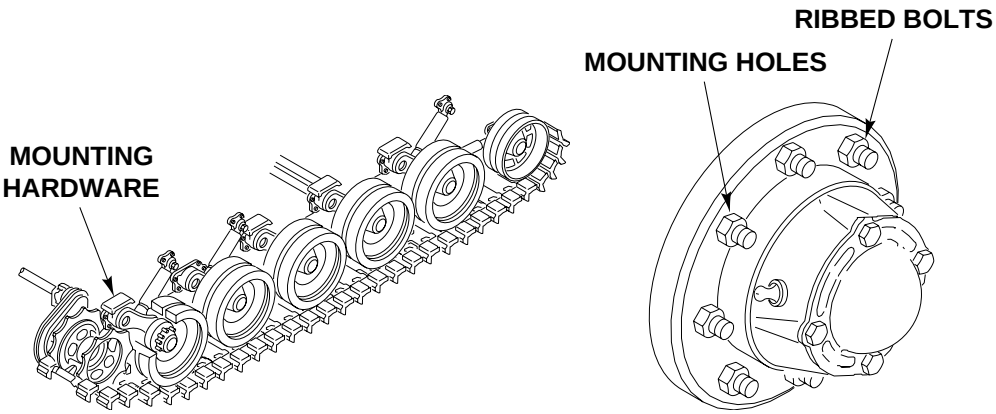

21	Semiannual or 1500 miles		Torsion Bar Anchors/ Splines/End Plugs	**WARNING** **Turret can rotate and severely injure or kill you. Do not reach through turret shield opening when turret power is on. Keep turret shield door closed whenever turret drive power is on. Engage turret travel lock before moving or reaching through turret shield opening.** a. Remove floor plates. Check torsion bar anchors, splines, and end plugs in arms and box beam for looseness on both sides of vehicles. If loose, tighten screws.	Any missing, stripped, broken, or bent torsion bars or attaching hardware.

ITEM NO.	INTERVAL	MAN-HOUR	ITEM TO BE CHECKED OR SERVICED	CREWMEMBER PROCEDURE	EQUIPMENT NOT READY/ AVAILABLE IF:
				b. Check plugs. Be sure they are fully seated. Tighten plugs to 50-75 lb-ft (68-102 N·m) torque. Use torque wrench. c. Replace missing or damaged cotter pins and pins or bolts from torsion bar anchors.	

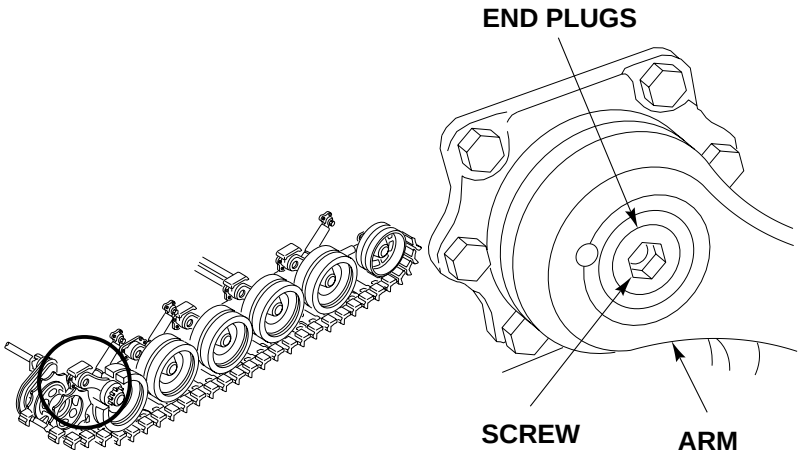

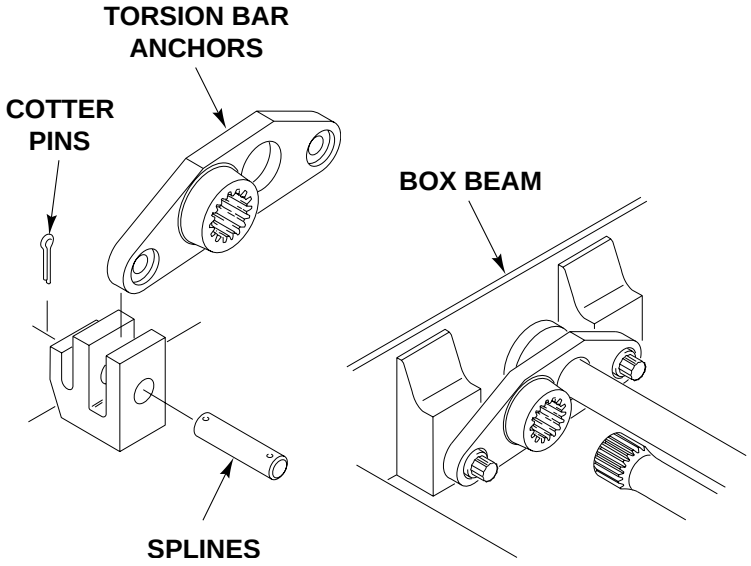

ITEM NO.	INTERVAL	MAN-HOUR	ITEM TO BE CHECKED OR SERVICED	CREWMEMBER PROCEDURE	EQUIPMENT NOT READY/ AVAILABLE IF:
22	Semiannual or 1500 miles		Shock Absorber	a. Check shock absorber for dents or cracks. Replace shock absorber that is bent broken, cracked, or dented enough to hinder operation.	Any missing, cracked, broken, or bent shock absorber, dents that hinder operation or Class III fluid leaks.
				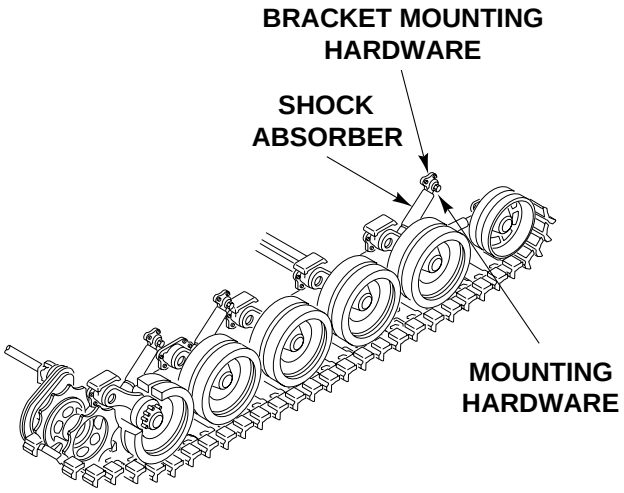	
				b. Replace shock absorbers if they have Class III fluid leaks or loose fitting bearings.	

ITEM NO.	INTERVAL	MAN-HOUR	ITEM TO BE CHECKED OR SERVICED	CREWMEMBER PROCEDURE	EQUIPMENT NOT READY/ AVAILABLE IF:
23	Semiannual or 1500 miles		Shock Absorber Mounting Hardware	a. Check shock absorber mounting hardware for looseness. Tighten loose hardware to 130-140 lb-ft (176-190 N·m) torque. Use torque wrench.	
				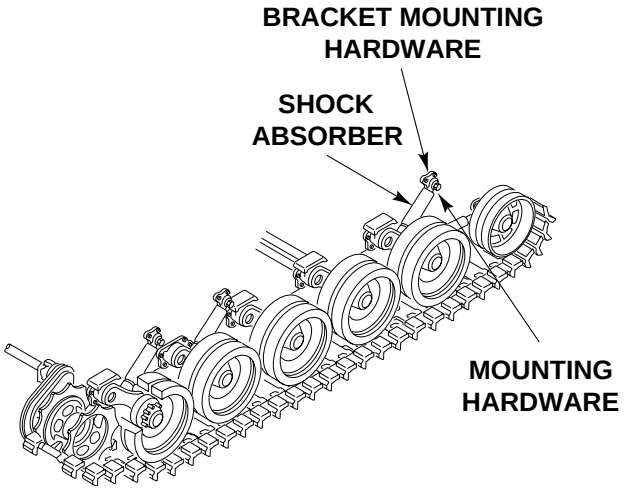	
24	Semiannual or 1500 miles		Shock Absorber Bracket Mounting Hardware	a. Check shock absorber mounting hardware for looseness. Tighten loose hardware to 130-140 lb-ft (176-190 N·m) torque. Use torque wrench.	
				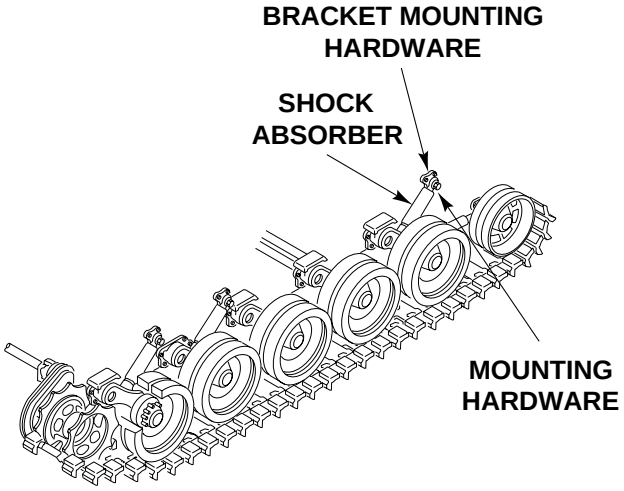	

ITEM NO.	INTERVAL	MAN-HOUR	ITEM TO BE CHECKED OR SERVICED	CREWMEMBER PROCEDURE	EQUIPMENT NOT READY/ AVAILABLE IF:
25	Semiannual or 1500 miles		Fuel Filler Screen and Cap	a. Check fuel filler screen for dirt buildup. If dirty, clean with cleaning solvent. Replace any screen that is damaged. Attach or replace loose, broken, or missing keeper chain on filler cap.	
26	Semiannual or 1500 miles		Fuel Tanks	**WARNING** **Diesel fuel can catch fire and seriously injure or kill soldiers and damage or destroy the vehicle. Wipe up fuel spills immediately. Do not smoke near fuel or when working on the fuel system. Disconnect vehicle ground when working on the fuel system.** **CAUTION** **Don't expose sealed areas to steam for more than 15 minutes.**	

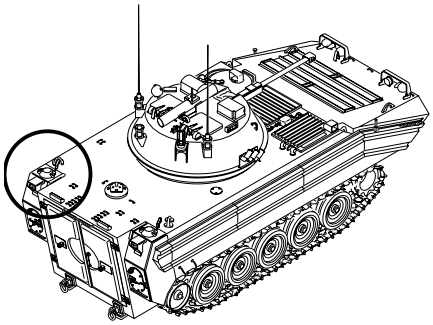

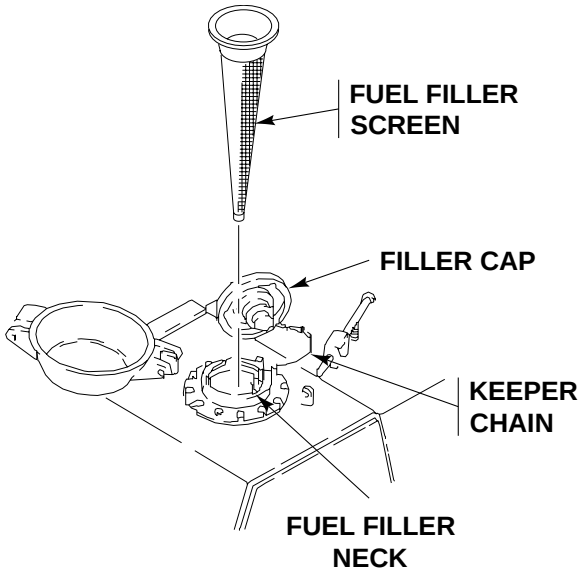

ITEM NO.	INTERVAL	MAN-HOUR	ITEM TO BE CHECKED OR SERVICED	CREWMEMBER PROCEDURE	EQUIPMENT NOT READY/ AVAILABLE IF:
				a. Check for leaks in fuel tank or fuel tank drain plug assembly. Repair leaky fuel tank plug or leaky fuel tank. b. Inspect fuel tank and drain plug assembly for contamination. Clean as required.	Contaminated fuel tank or fuel leak.

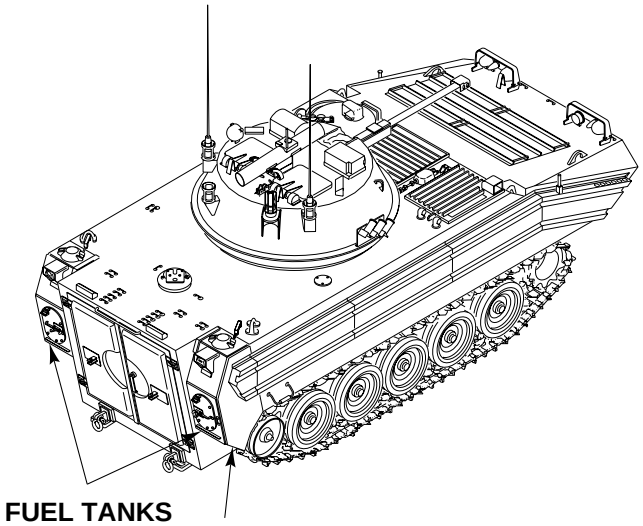

ITEM NO.	INTERVAL	MAN-HOUR	ITEM TO BE CHECKED OR SERVICED	CREWMEMBER PROCEDURE	EQUIPMENT NOT READY/ AVAILABLE IF:
27	Semiannual or 1500 miles		Rubber Guards	a. Replace cracked, cut, or hard guards.	
				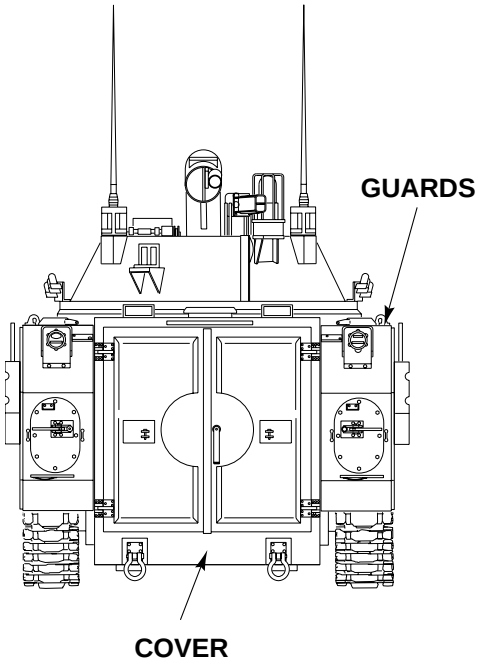	
28	Semiannual or 1500 miles		Webbing Straps and Loops	a. Replace cracked, cut, or frayed webbing straps and loops, both external and internal.	

ITEM NO.	INTERVAL	MAN-HOUR	ITEM TO BE CHECKED OR SERVICED	CREWMEMBER PROCEDURE	EQUIPMENT NOT READY/ AVAILABLE IF:
29	Semiannual or 1500 miles		Taillights, Stop Lights, and Blackout Lights	a. Replace discolored and cracked taillight lens. b. Have helper operate service taillight, service stop light, blackout light, and blackout stop light. See TM 9-2350-366-10-1. Repair or replace lights that do not work.	

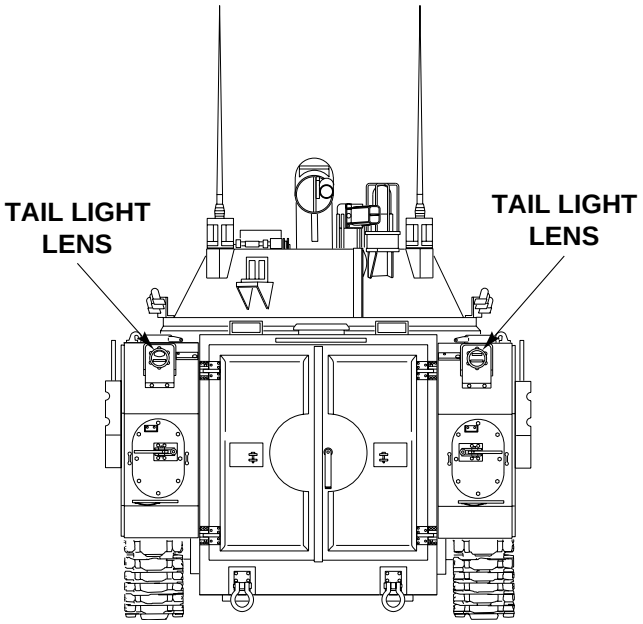

PREVENTIVE MAINTENANCE CHECKS AND SERVICES — Continued **0104 00**

ITEM NO.	INTERVAL	MAN-HOUR	ITEM TO BE CHECKED OR SERVICED	CREWMEMBER PROCEDURE	EQUIPMENT NOT READY/ AVAILABLE IF:
30	Semiannual or 1500 miles		Rear Doors and Seals	a. Perform chalk test. Replace leaky door seal. b. Check door for smooth operation. If hinges bind, notify your supervisor. Repair catch if door does not lock in open position. c. Adjust handle if door does not seal tightly in closed position.	Doors fail to lock in any position.

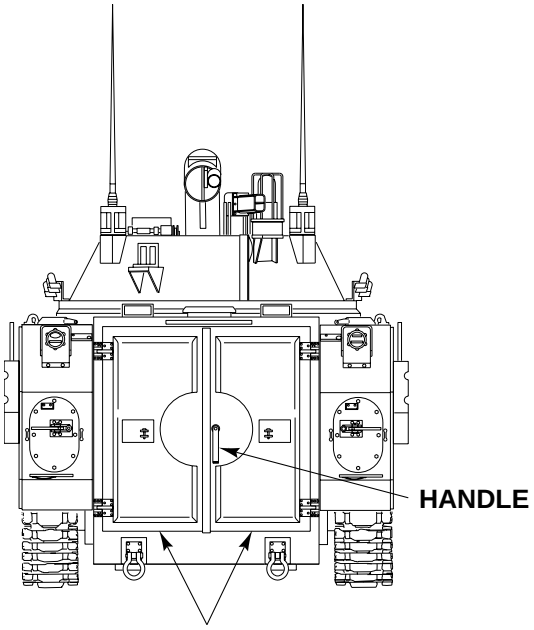

ITEM NO.	INTERVAL	MAN-HOUR	ITEM TO BE CHECKED OR SERVICED	CREWMEMBER PROCEDURE	EQUIPMENT NOT READY/ AVAILABLE IF:
31	Semiannual or 1500 miles		Rear Doors, Latches, and Seals	a. With doors closed, check for tight fit on rear seal. Adjust door lock and linkage if needed. b. Open doors. See TM 9-2350-366-10-1. If hinges bind notify your supervisor. c. Replace door seal that is cut, cracked, or hard. d. Replace wire rope that is frayed or has broken strands.	

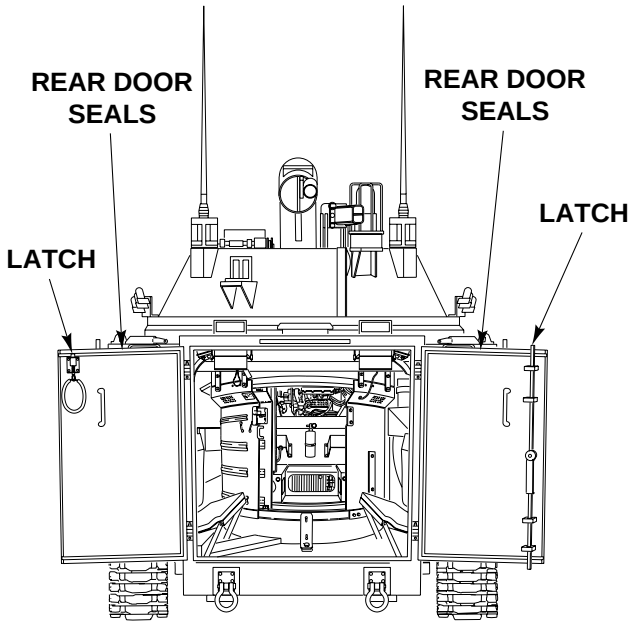

ITEM NO.	INTERVAL	MAN-HOUR	ITEM TO BE CHECKED OR SERVICED	CREWMEMBER PROCEDURE	EQUIPMENT NOT READY/ AVAILABLE IF:
32	Semiannual or 1500 miles		Headlights, Blackout Lights, and Horn	a. Replace discolored and cracked lens in service headlights, infrared headlights, blackout marker lights, or blackout headlight. **WARNING** 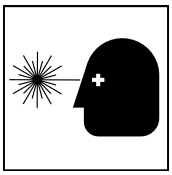 **Looking directly at infrared headlights may burn your eyes. Do not look directly into infrared headlights.** b. Have helper operate service taillight and infrared headlights, feeling for heat. Operate blackout marker lights, and blackout headlight, and horn. Repair or replace lights or horn that do not work.	

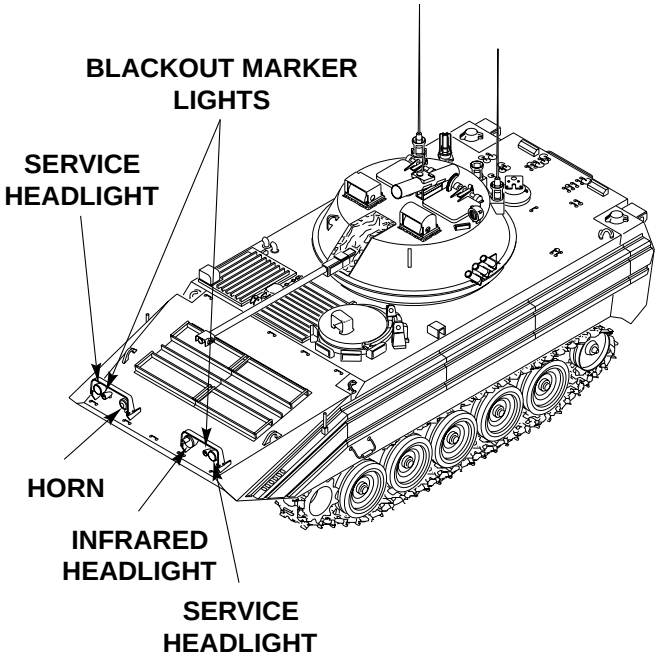

ITEM NO.	INTERVAL	MAN-HOUR	ITEM TO BE CHECKED OR SERVICED	CREWMEMBER PROCEDURE	EQUIPMENT NOT READY/ AVAILABLE IF:
33	Semiannual or 1500 miles		Power Plant Grill and Power Plant Front Access Door	a. Check screws on power plant grill for looseness. Tighten loose screws to 100-120 lb-ft (136-163 N·m) torque. Use torque wrench. b. Check power plant front access panel seal for cracks, cuts, stiffness, and looseness. If seal is loose, tighten. If damaged, replace.	Damage prevents door from closing, sealing, and locking.

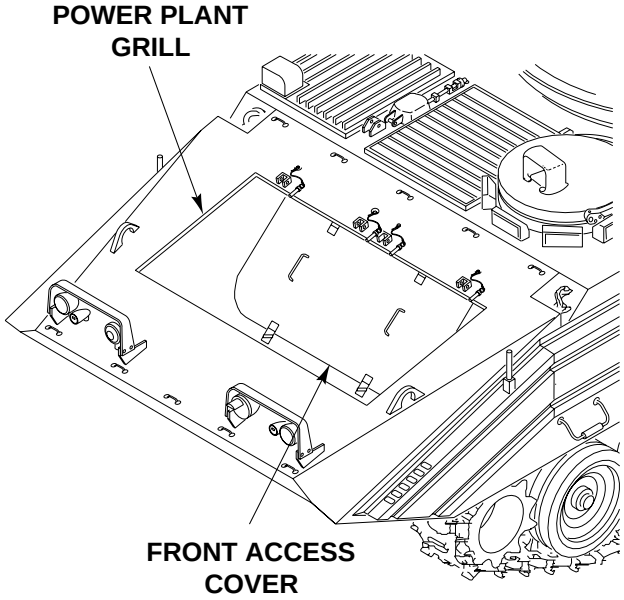

ITEM NO.	INTERVAL	MAN-HOUR	ITEM TO BE CHECKED OR SERVICED	CREWMEMBER PROCEDURE	EQUIPMENT NOT READY/ AVAILABLE IF:
34	Semiannual or 1500 miles		Radiator Auxiliary Tank Filler Cap	a. Replace filler cap that does not seal tightly on auxiliary tank filler neck. b. Attach or replace loose, broken, or missing chain on filler cap.	Any Class III coolant leaks.
35	Semiannual or 1500 miles		Lifting Eyes	a. Check for loose or missing screws on lifting eyes. Replace missing screws. Tighten loose screws to 175-200 lb-ft (237-271 N·m) torque. Use torque wrench.	

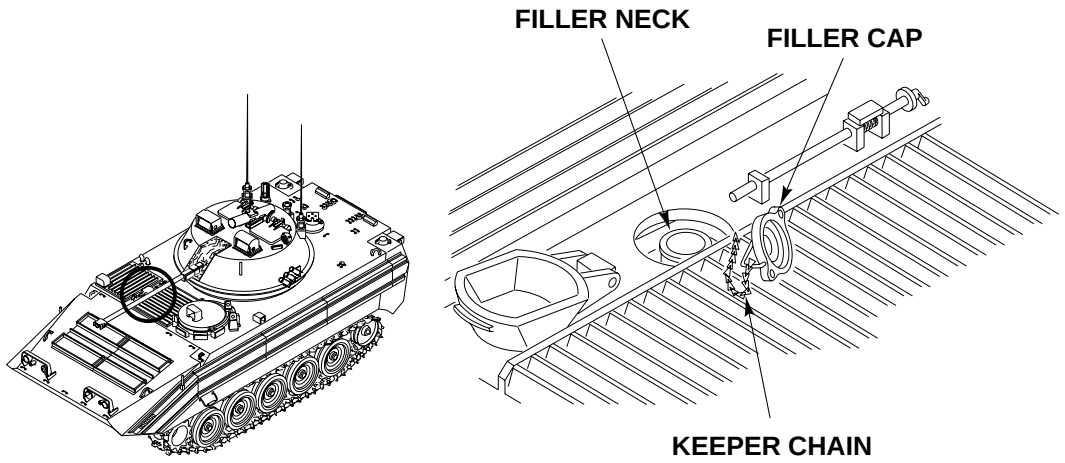

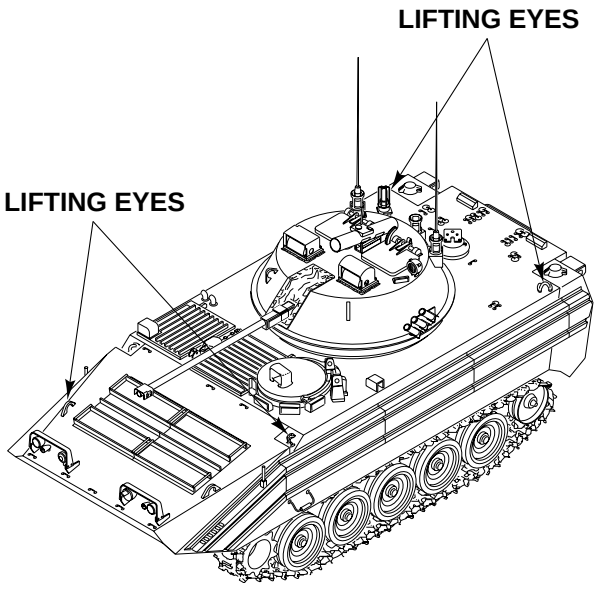

ITEM NO.	INTERVAL	MAN-HOUR	ITEM TO BE CHECKED OR SERVICED	CREWMEMBER PROCEDURE	EQUIPMENT NOT READY/ AVAILABLE IF:
36	Semiannual or 1500 miles		Driver's Hatch and Seals	a. Replace cracked, cut, or hard seal. b. Check covers for smooth operation. Repair or lubricate cover that binds. Repair catch if cover doesn't lock in open position. c. Replace damaged or missing catch safety pins. d. Replace bumpers that are cut, gouged, or hard. e. Adjust bumpers that do not compress when covers are locked open, see TM 9-2350-366-10-1.	Driver's hatch fails to lock in any position or catch safety pin is missing.

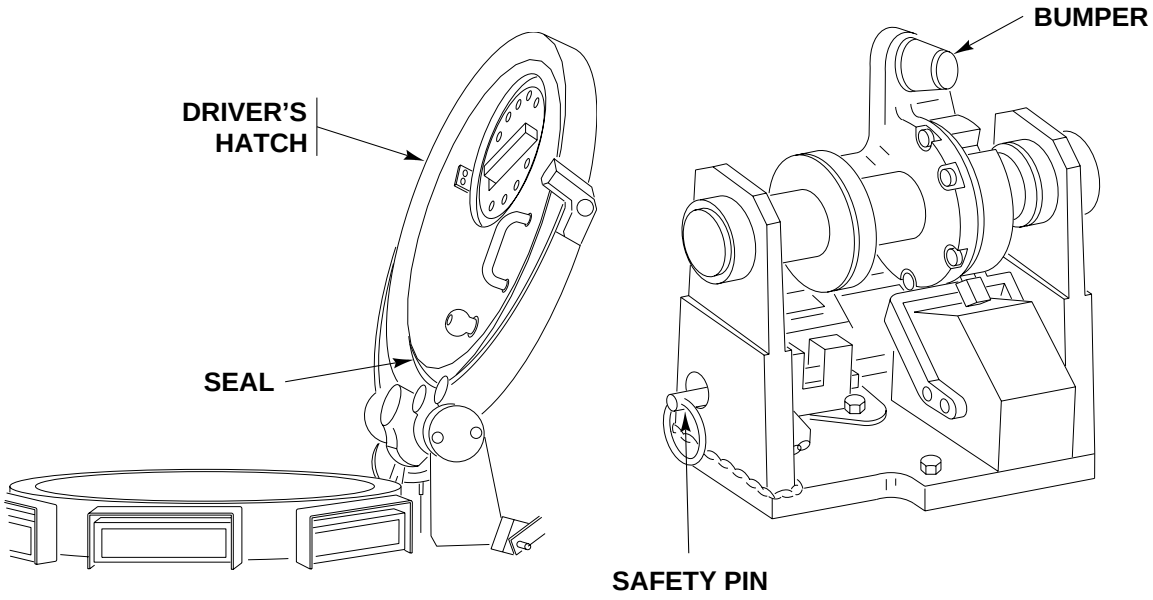

ITEM NO.	INTERVAL	MAN-HOUR	ITEM TO BE CHECKED OR SERVICED	CREWMEMBER PROCEDURE	EQUIPMENT NOT READY/ AVAILABLE IF:
37	Semiannual or 1500 miles		Power Plant Bottom Access Cover, Hull Drain Plugs, and Final Drive Drain Plugs	a. Check final drive drain plugs for leaks. Tighten leaking plugs.	Any Class III leaks or missing seals, covers, or plugs.
				b. Check for loose or missing hull drain plugs. If missing replace. Tighten loose plugs.	
				c. Remove power plant bottom access cover and check for missing or damaged seal. Replace missing or damaged seal. Install bottom access cover. Tighten screws to 40-50 lb-ft (54-68 N·m) torque. Use torque wrench.	Missing or loose seals, plugs, or covers.
				d. Check for loose or missing screws in power plant bottom access cover. Replace screws if missing. Tighten loose screws to 40-50 lb-ft (54-68 N·m) torque. Use torque wrench.	

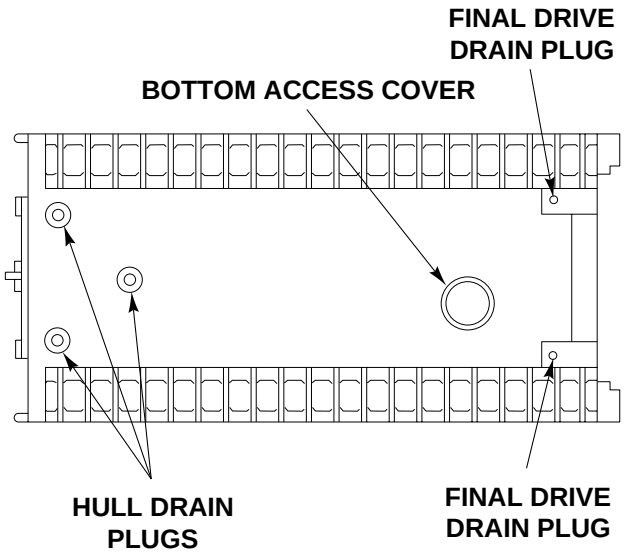

ITEM NO.	INTERVAL	MAN-HOUR	ITEM TO BE CHECKED OR SERVICED	CREWMEMBER PROCEDURE	EQUIPMENT NOT READY/ AVAILABLE IF:
38	Semiannual or 1500 miles		Final Drive	a. Inspect final drive input shaft oil seals for evidence of leakage. Replace final drive seals that have leaks. Tighten screws to 21-25 lb-ft (28-34 N·m) torque. Use torque wrench.	Any Class III leaks.
				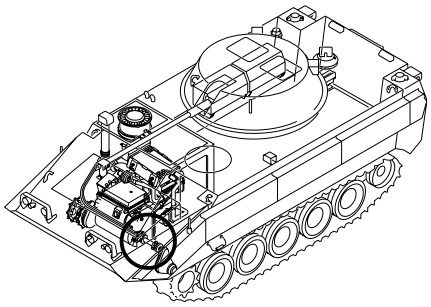 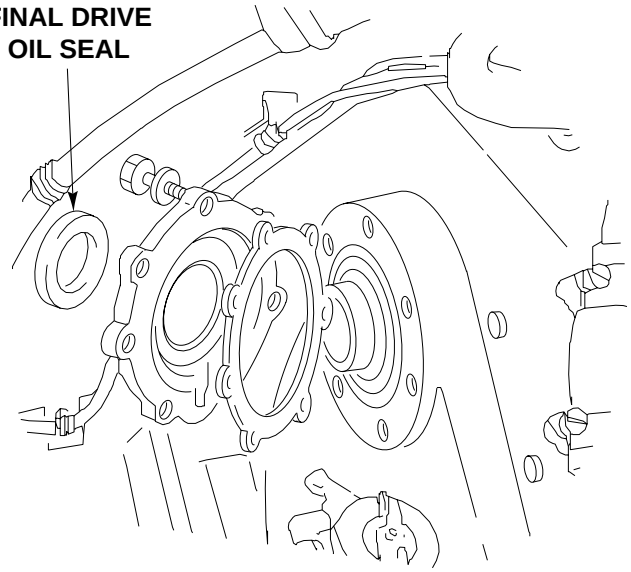	
39	Semiannual or 1500 miles		Power Plant Noises	a. Check power plant operation. If unusual noises are heard, repair suspect component or contact higher level of maintenance for assistance and repair.	
40	Semiannual or 1500 miles		Exhaust System	**NOTE** **Vehicle leaks exhaust when weather is cold. For this reason, carbon will be present around joints and exhaust pipe connecting clamps. This is normal. The exhaust system joints will seal after pipes heat up. Check for exhaust leaks only after engine reaches normal operating temperature of 180° to 205°F (71° to 93.3°C).**	
				a. Check manifold, pipes, muffler, and clamps for looseness or damage. Replace damaged hardware. Tighten loose clamps.	Missing or damaged hardware allowing exhaust leaks.

ITEM NO.	INTERVAL	MAN-HOUR	ITEM TO BE CHECKED OR SERVICED	CREWMEMBER PROCEDURE	EQUIPMENT NOT READY/ AVAILABLE IF:

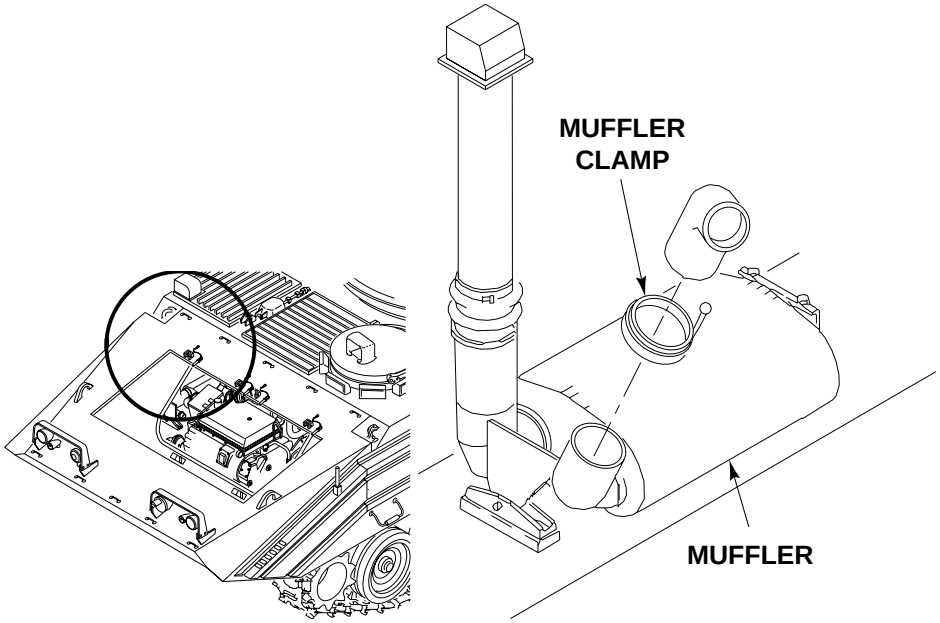

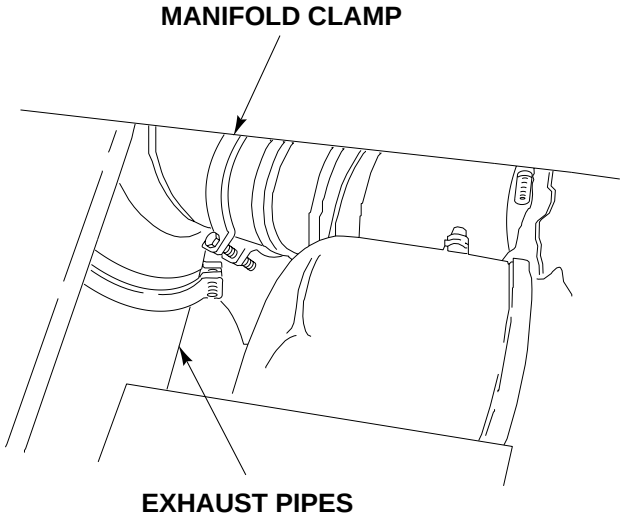

ITEM NO.	INTERVAL	MAN-HOUR	ITEM TO BE CHECKED OR SERVICED	CREWMEMBER PROCEDURE	EQUIPMENT NOT READY/ AVAILABLE IF:
41	Semiannual or 1500 miles		Air Cleaner	**WARNING** 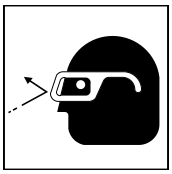 **Compressed air can injure you or others.** **Do not aim compressed air at yourself or other personnel. Always wear goggles when working with compressed air. Do not use more pressure than 30 psi (207kPa) with air nozzles.** a. Clean or replace air cleaner element. b. Clean drain hole on bottom of air cleaner container. Replace damaged container.	Latches or element is missing, damaged, or broken. Gasket is torn or separated from element.

ITEM NO.	INTERVAL	MAN-HOUR	ITEM TO BE CHECKED OR SERVICED	CREWMEMBER PROCEDURE	EQUIPMENT NOT READY/ AVAILABLE IF:
				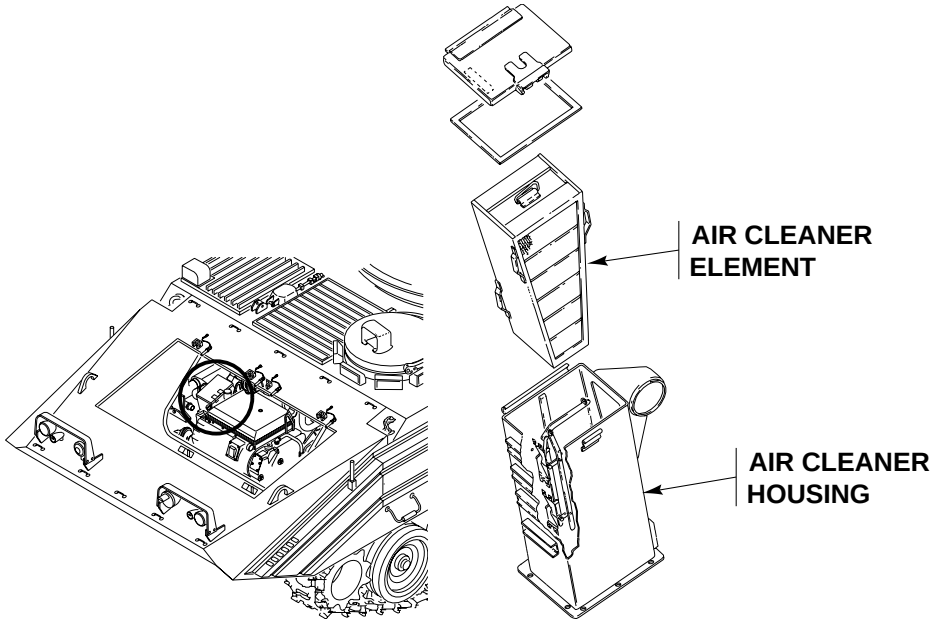	
42	Semiannual or 1500 miles		Crew Air Cleaner	**WARNING** **Power unit access door could fall and injure you.** **Before entering or reaching into engine compartment, make sure that support link is fully engaged on pin.** a. Clean or replace air cleaner element.	Latches or element is missing, damaged, or broken. Gasket is torn or separated from element.

ITEM NO.	INTERVAL	MAN-HOUR	ITEM TO BE CHECKED OR SERVICED	CREWMEMBER PROCEDURE	EQUIPMENT NOT READY/ AVAILABLE IF:
43	Semiannual or 1500 miles		Air Cleaner Hoses	a. Replace cracked, broken, or brittle hoses.	
44	Semiannual or 1500 miles		Electrical Connectors and Leads	a. Check electrical connectors for looseness or broken contact. Replace broken connectors. b. Check that electrical leads in power plant compartment are not frayed, cut, or broken. If leads are damaged, identify damaged lead. Locate specific task to repair or replace damaged lead or wiring harness.	

ELECTRICAL CONNECTORS

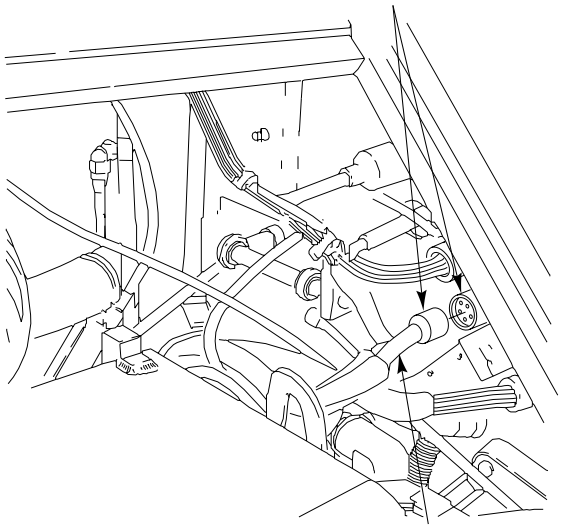

ELECTRICAL LEADS

ITEM NO.	INTERVAL	MAN-HOUR	ITEM TO BE CHECKED OR SERVICED	CREWMEMBER PROCEDURE	EQUIPMENT NOT READY/ AVAILABLE IF:
45	Semiannual or 1500 miles		Drive Shafts and Universal Joints	**NOTE** **See WP 0398 00 for proper use of torque wrench adapter.** a. Check for loose or missing screws and lock washers on universal joints. Tighten loose screws to 86-92 lb-ft (117-127 N·m) torque. Use torque wrench and adapter. b. Lubricate U-joints every 150 hours/1,500 miles or semi-annually with GAA. Clean fittings with cleaning solvent.	Any hardware is loose, broken, or missing.

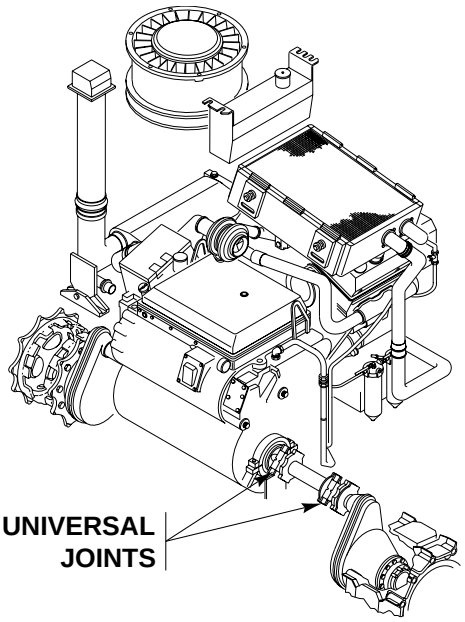

ITEM NO.	INTERVAL	MAN-HOUR	ITEM TO BE CHECKED OR SERVICED	CREWMEMBER PROCEDURE	EQUIPMENT NOT READY/ AVAILABLE IF:
46	Semiannual or 1500 miles		Transmission Breather	a. Remove transmission breather and check for cracks, dents, or stripped threads. Replace damaged breather. b. Clean transmission breather with cleaning solvent. Dry breather and install on transmission.	
				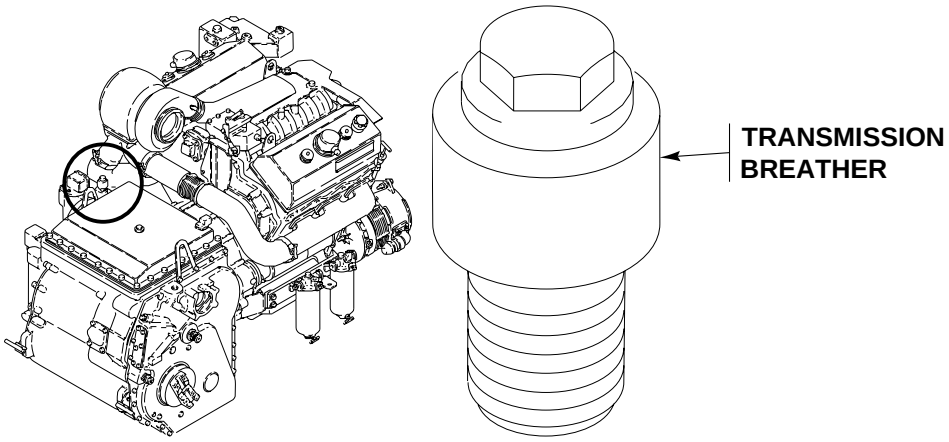	
47	Semiannual or 1500 miles		Transmission Rod and Connecting Link	a. Check steering rod and connecting link at lever on top of transmission for ease of movement from low to full position. If linkage doesn't move easily, troubleshoot steering system.	
				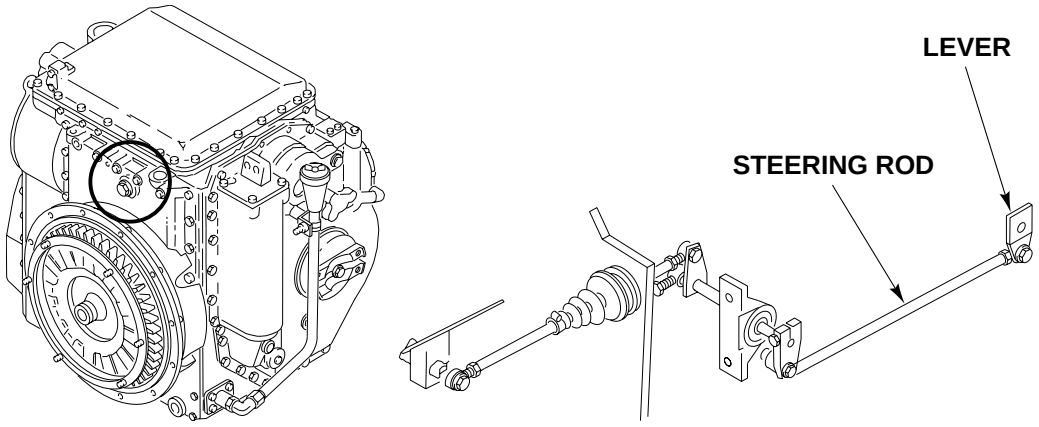	
48	Semiannual or 1500 miles		Power Plant Compartment	a. Open power plant front access doors. See TM 9-2350-366-10-1.	

ITEM NO.	INTERVAL	MAN-HOUR	ITEM TO BE CHECKED OR SERVICED	CREWMEMBER PROCEDURE	EQUIPMENT NOT READY/ AVAILABLE IF:
				WARNING **Solvent fumes and fluid are poisonous and can cause skin irritation.** **Solvent may be harmful if swallowed. Avoid skin contact and breathing of fumes. Read solvent warning at the front of this manual.** **WARNING** **Solvent evaporates rapidly and makes fumes that are flammable.** **Do not smoke or allow open flames near solvent fumes.** **Read solvent warning at the front of this manual.** b. Clean power plant compartment with cleaning solvent. Remove debris and wipe up spilled oil and fuel.	
49	Semiannual or 1500 miles		Power Plant Components	a. Check power plant components for looseness. If any of the mounting components on the starter, generator, etc. are loose, tighten.	Any damage that would prevent operation of vehicle.

ITEM NO.	INTERVAL	MAN-HOUR	ITEM TO BE CHECKED OR SERVICED	CREWMEMBER PROCEDURE	EQUIPMENT NOT READY/ AVAILABLE IF:
				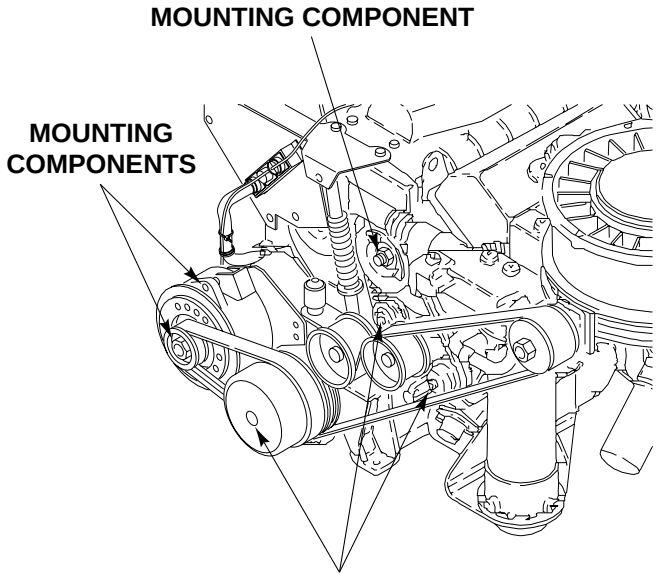 MOUNTING COMPONENTS	
50	Semiannual or 1500 miles		Power Plant Mounts	a. Tighten loose mount screws (on forward engine mount) to 100-120 lb-ft (136-163 N·m) torque. Use torque wrench and socket set.	Any cracked or broken mounts.
				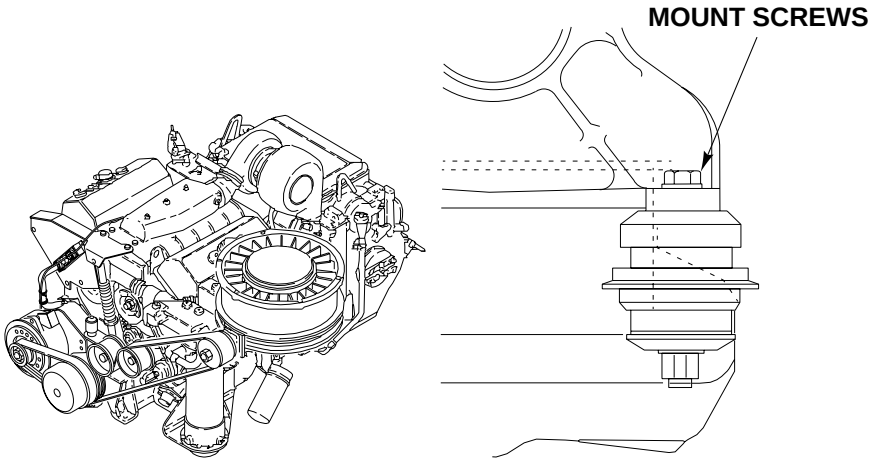	

ITEM NO.	INTERVAL	MAN-HOUR	ITEM TO BE CHECKED OR SERVICED	CREWMEMBER PROCEDURE	EQUIPMENT NOT READY/ AVAILABLE IF:
51	Semiannual or 1500 miles		Drive Belts	a. Check fan belts for proper tension. See TM 9-2350-366-10-1. Adjust if needed. b. Check generator drive belts for proper tension. See TM 9-2350-366-10-1. Adjust if needed.	
				c. Replace frayed or cracked belts.	Any belt that is missing, broken, frayed more than 2 inches, cracks 1/8 inch in depth or 50% of belt thickness.

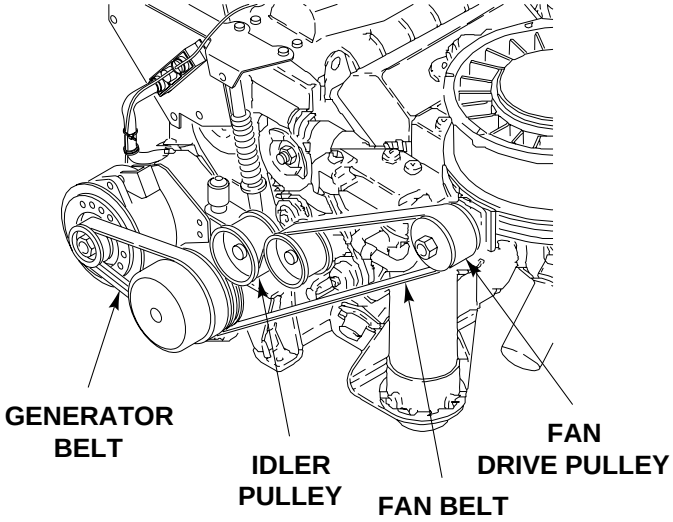

ITEM NO.	INTERVAL	MAN-HOUR	ITEM TO BE CHECKED OR SERVICED	CREWMEMBER PROCEDURE	EQUIPMENT NOT READY/ AVAILABLE IF:
52	Semiannual or 1500 miles		Cooling Fan	a. Replace cracked or bent drive pulley and idler pulley.	Any cracked, broken, loose, or missing hardware.

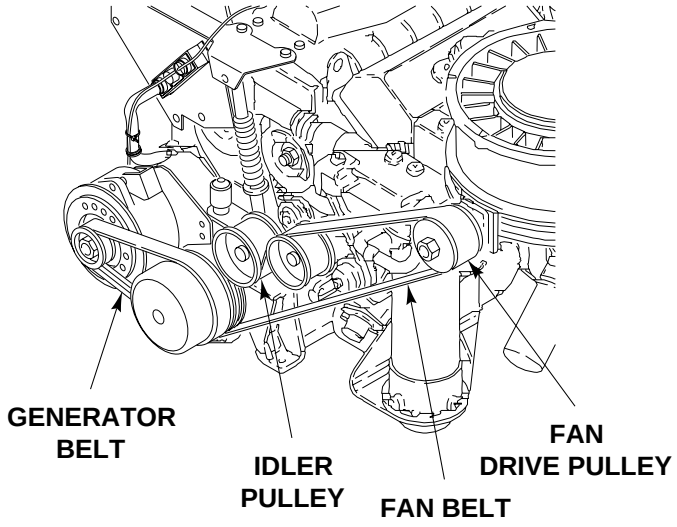

ITEM NO.	INTERVAL	MAN-HOUR	ITEM TO BE CHECKED OR SERVICED	CREWMEMBER PROCEDURE	EQUIPMENT NOT READY/ AVAILABLE IF:
53	Semiannual or 1500 miles		Cooling System: Hoses, Coolant, Pump, and Drive Belt	a. Replace cracked or broken hoses. b. Tighten loose clamps. Replace leaking coolant pump. c. Check engine coolant pump belt tension. See TM 9-2350-366-10-1. Adjust if necessary. d. Replace cracked or frayed engine water pump belts.	Any cracked, broken, missing hardware or Class III leaks.

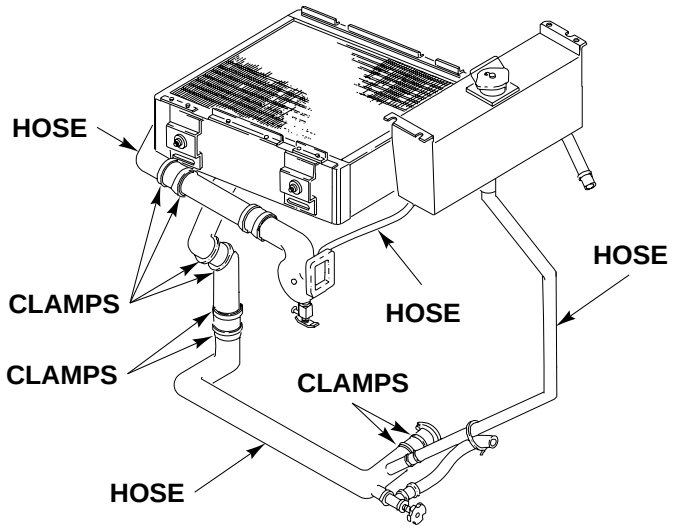

ITEM NO.	INTERVAL	MAN-HOUR	ITEM TO BE CHECKED OR SERVICED	CREWMEMBER PROCEDURE	EQUIPMENT NOT READY/ AVAILABLE IF:
54	Semiannual or 1500 miles		Radiator	a. Clean radiator. b. Replace leaking radiator.	Any Class III leaks.

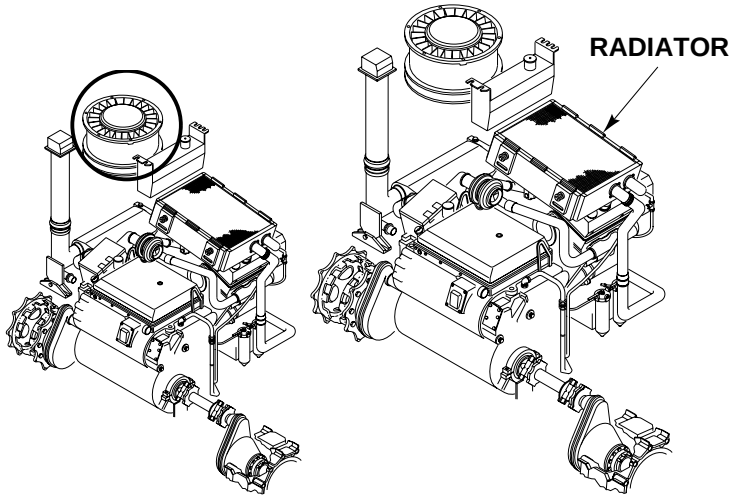

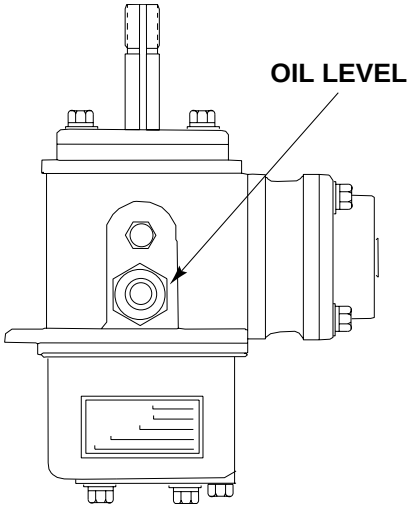

ITEM NO.	INTERVAL	MAN-HOUR	ITEM TO BE CHECKED OR SERVICED	CREWMEMBER PROCEDURE	EQUIPMENT NOT READY/ AVAILABLE IF:
55	Semiannual or 1500 miles		Fan Gearbox	a. Check fan gearbox oil level and add oil if needed. b. Drain gearbox every 150 hours/1,500 miles or semi-annually. Remove drain plug and packing. Discard packing. c. Inspect drain plug and oil for metallic particles and foreign matter. Refill gearbox and lubricate new packing with OE/HDO oil. Bring level to top of sight gauge.	No oil in sight glass. Any Class II or III oil leak.
56	Semiannual or 1500 miles		Operate Air Box Heater Air Pump	**NOTE** **The purpose of the item is to exercise the vanes in the air box heater pump.** a. Disconnect lead from fuel shutoff solenoid. b. To prevent engine from starting, pull fuel cutoff out. See TM 9-2350-366-10-1. **CAUTION** **Air pump can be damaged if switch is held on too long. Do not exceed a total of 20 seconds of operation.** c. Have helper crank engine and run air pump at the same time intermittently for a total of 20 seconds. See TM 9-2350-366-10-1. Listen for air pump operation. d. Connect lead to fuel shutoff solenoid. e. Lubricate air motor with OE/HDO every 150 hours/1,500 miles, semiannually, or as required.	

ITEM NO.	INTERVAL	MAN-HOUR	ITEM TO BE CHECKED OR SERVICED	CREWMEMBER PROCEDURE	EQUIPMENT NOT READY/ AVAILABLE IF:
57	Semiannual or 1500 miles		Throttle Controls and Transmission Linkage	a. Check hand throttle for ease of operation from low to full position. If throttle doesn't move easily, adjust.	Any binding, broken, cracked, missing, or loose hardware.
				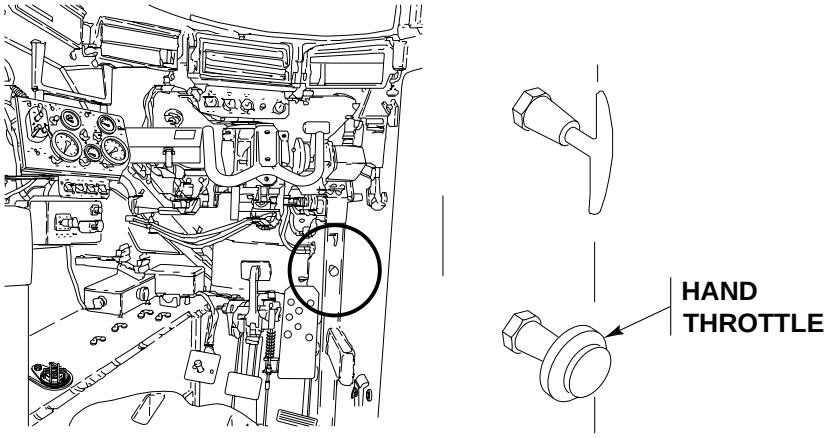	
58	Semiannual or 1500 miles		Parking Brake Linkage	a. Check parking brake linkage for proper adjustment. If lever doesn't move easily, adjust lever.	Any binding, broken, cracked, missing, or loose hardware.
				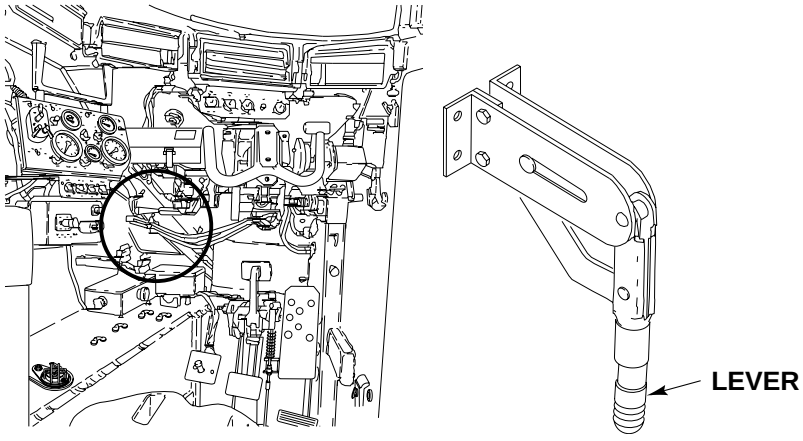	

ITEM NO.	INTERVAL	MAN-HOUR	ITEM TO BE CHECKED OR SERVICED	CREWMEMBER PROCEDURE	EQUIPMENT NOT READY/ AVAILABLE IF:
59	Semiannual or 1500 miles		Service Brake Linkage	a. Check service brake pedal and linkage for proper adjustment.	Any binding, broken, cracked, missing, or loose hardware.
				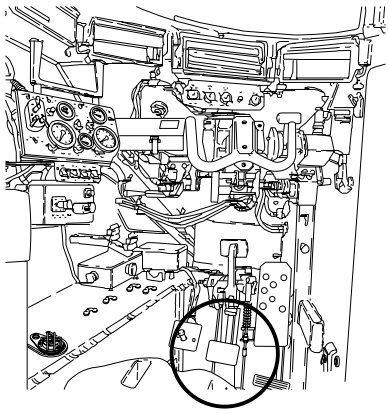 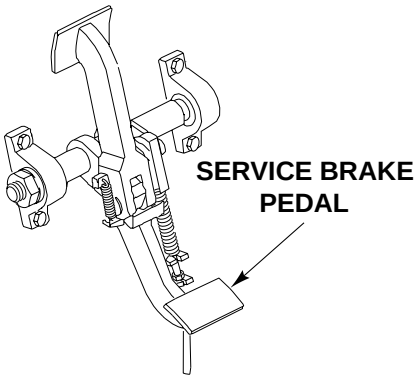	
60	Semiannual or 1500 miles		Fuel System	**WARNING** **Diesel fuel can catch fire and seriously injure or kill soldiers and damage or destroy the vehicle. Wipe up fuel spills immediately. Do not smoke near fuel or when working on the fuel system. Disconnect vehicle ground when working on the fuel system.**	
				a. Check fuel tanks for leaks. Repair or replace fuel tanks that leak.	Any fuel leaks or cracked, broken, stripped, or crimped hardware.

ITEM NO.	INTERVAL	MAN-HOUR	ITEM TO BE CHECKED OR SERVICED	CREWMEMBER PROCEDURE	EQUIPMENT NOT READY/ AVAILABLE IF:
				b. Replace fuel hoses and tubes that are cracked, crimped, or worn. c. Replace cracked or stripped fittings.	
				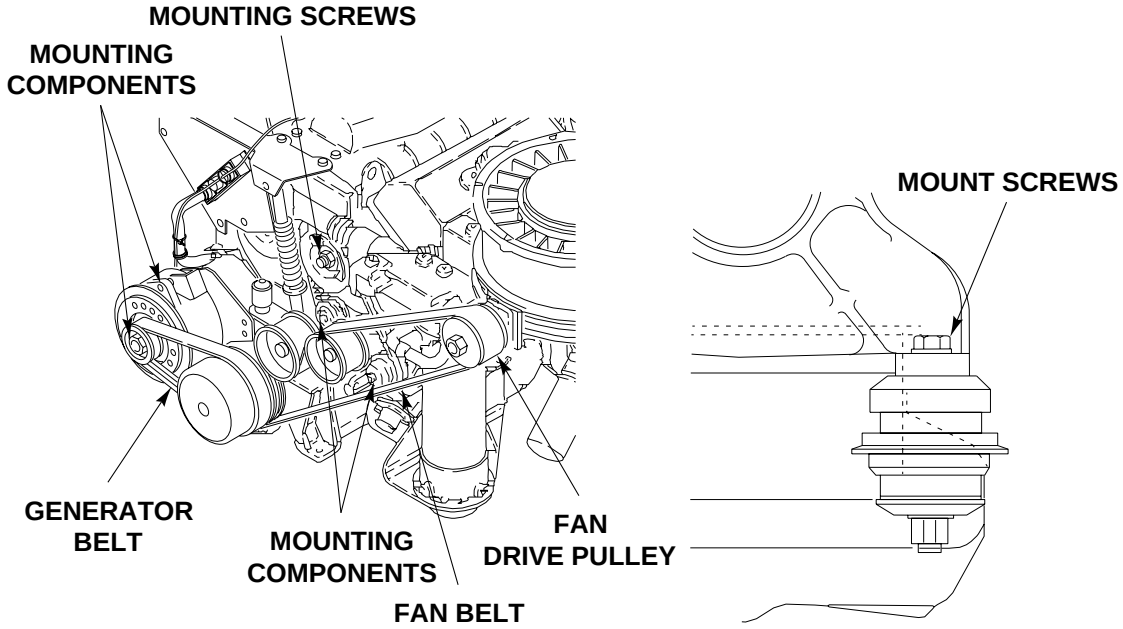	
61	Semiannual or 1500 miles		Fuel Cutoff	a. Operate fuel cutoff to check for binding. If binding occurs, adjust. b. Operate accelerator to check for binding linkage. If binding occurs, adjust.	Any binding, broken, cracked, missing, or loose hardware.

ITEM NO.	INTERVAL	MAN-HOUR	ITEM TO BE CHECKED OR SERVICED	CREWMEMBER PROCEDURE	EQUIPMENT NOT READY/ AVAILABLE IF:
				c. Move transmission range controller through all gears to check for binding. If binding occurs, adjust.	
				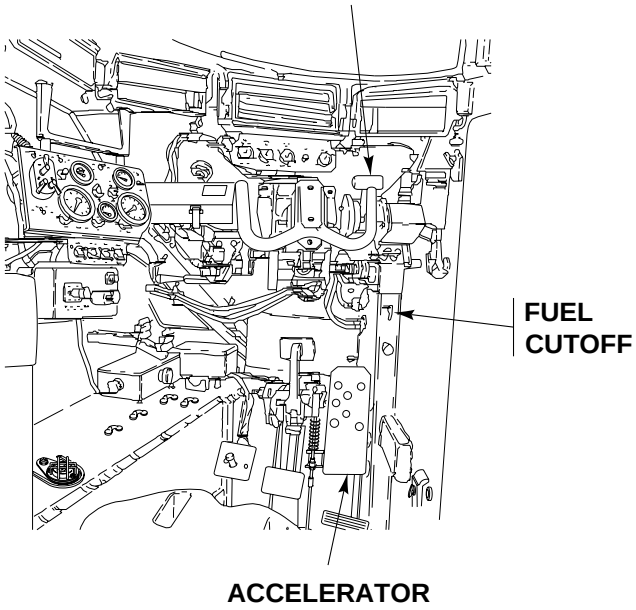	
62	Semiannual or 1500 miles		Fuel Filters	**WARNING** **Diesel fuel can catch fire and seriously injure or kill soldiers and damage or destroy the vehicle. Wipe up fuel spills immediately. Do not smoke near fuel or when working on the fuel system. Disconnect vehicle ground when working on the fuel system.** a. Replace primary and secondary fuel filter elements.	Any fuel leaks.

ITEM NO.	INTERVAL	MAN-HOUR	ITEM TO BE CHECKED OR SERVICED	CREWMEMBER PROCEDURE	EQUIPMENT NOT READY/ AVAILABLE IF:
				NOTE **Large amounts of sediment or debris may indicate contamination of fuel tanks.** b. Every 150 hours/1,500 miles or yearly, remove rear access panels. Remove and inspect primary and secondary filter shells. Refill and reinstall shells.	
63	Semiannual or 1500 miles		Portable and Fixed Fire Extinguisher	**WARNING** **Accidental discharge of fire bottles can seriously injure you.** **Deactivate fire suppression system and insert anti-recoil plugs and safety pins before you work near fire bottles.**	

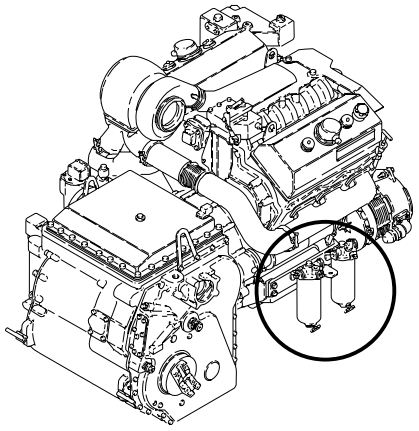

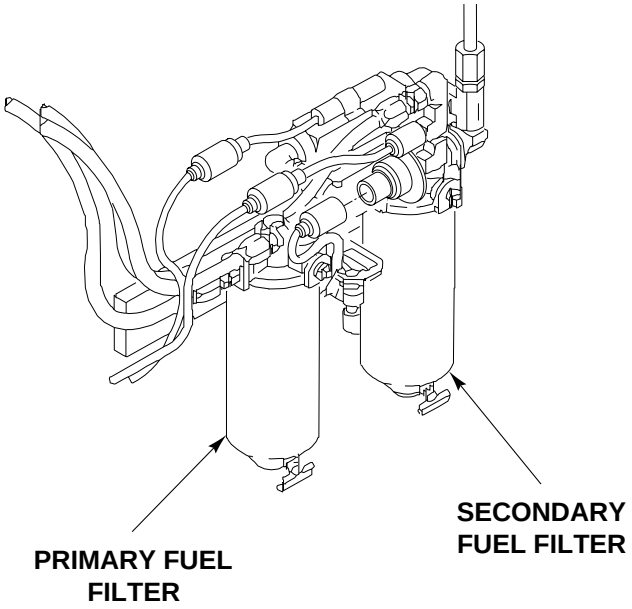

ITEM NO.	INTERVAL	MAN-HOUR	ITEM TO BE CHECKED OR SERVICED	CREWMEMBER PROCEDURE	EQUIPMENT NOT READY/ AVAILABLE IF:
				WARNING **Accidental discharge of fire bottles can seriously injure your eyes or skin.** **Wear face shield, ear plugs, protective clothing, and gloves during fire bottle maintenance.** a. Weigh portable fire extinguishers. Recharge or exchange fire extinguisher if weight loss is more than 10 percent of charged weight stamped on bottle. Fill out DA Form 2402 to exchange cylinders. b. Check wire seal. Replace broken, damaged, or missing seal.	Extinguisher is missing or seal/hardware is missing, damaged, or broken.

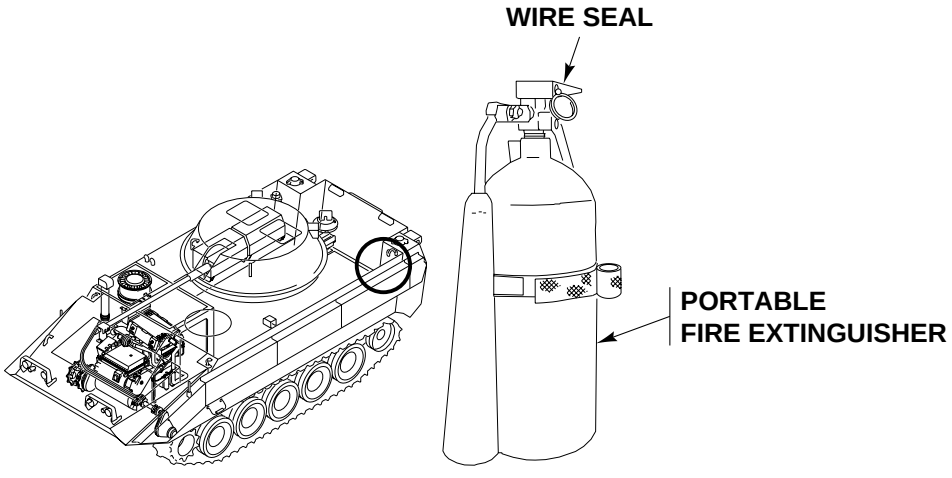

ITEM NO.	INTERVAL	MAN-HOUR	ITEM TO BE CHECKED OR SERVICED	CREWMEMBER PROCEDURE	EQUIPMENT NOT READY/ AVAILABLE IF:
64	Semiannual or 1500 miles		Fixed Fire Extinguisher	**CAUTION** **Fire extinguisher control valve sealed with steel wire will not work. Make sure seal wire is made out of 0.020 inch thin copper.** a. Remove and weigh fixed fire extinguisher. b. Recharge or exchange fire extinguisher if weight loss is more than 10 percent of charged weight stamped on bottle. c. Inspect fire extinguisher cylinder data plate to ensure that a hydrostatic test has been performed within the past 12 years. Faulty extinguishers, or those beyond the test time limit (12 years), shall be declared unserviceable and replaced. **CAUTION** **Fire extinguisher control valve sealed with steel wire WILL NOT work. Use 0.020 inch thin copper wire.** d. Before reconnecting cylinder, operate discharge handles to be sure cables and controls work properly. e. Install cylinder and replace copper seal wires. f. Replace discharge tubes that are crimped, plugged, or cracked.	Extinguisher is missing or seal/lockwire is missing, damaged, or broken, bottles overdue hydrostatic test. Lockwire is not 0.020 inch thin copper.

ITEM NO.	INTERVAL	MAN-HOUR	ITEM TO BE CHECKED OR SERVICED	CREWMEMBER PROCEDURE	EQUIPMENT NOT READY/ AVAILABLE IF:

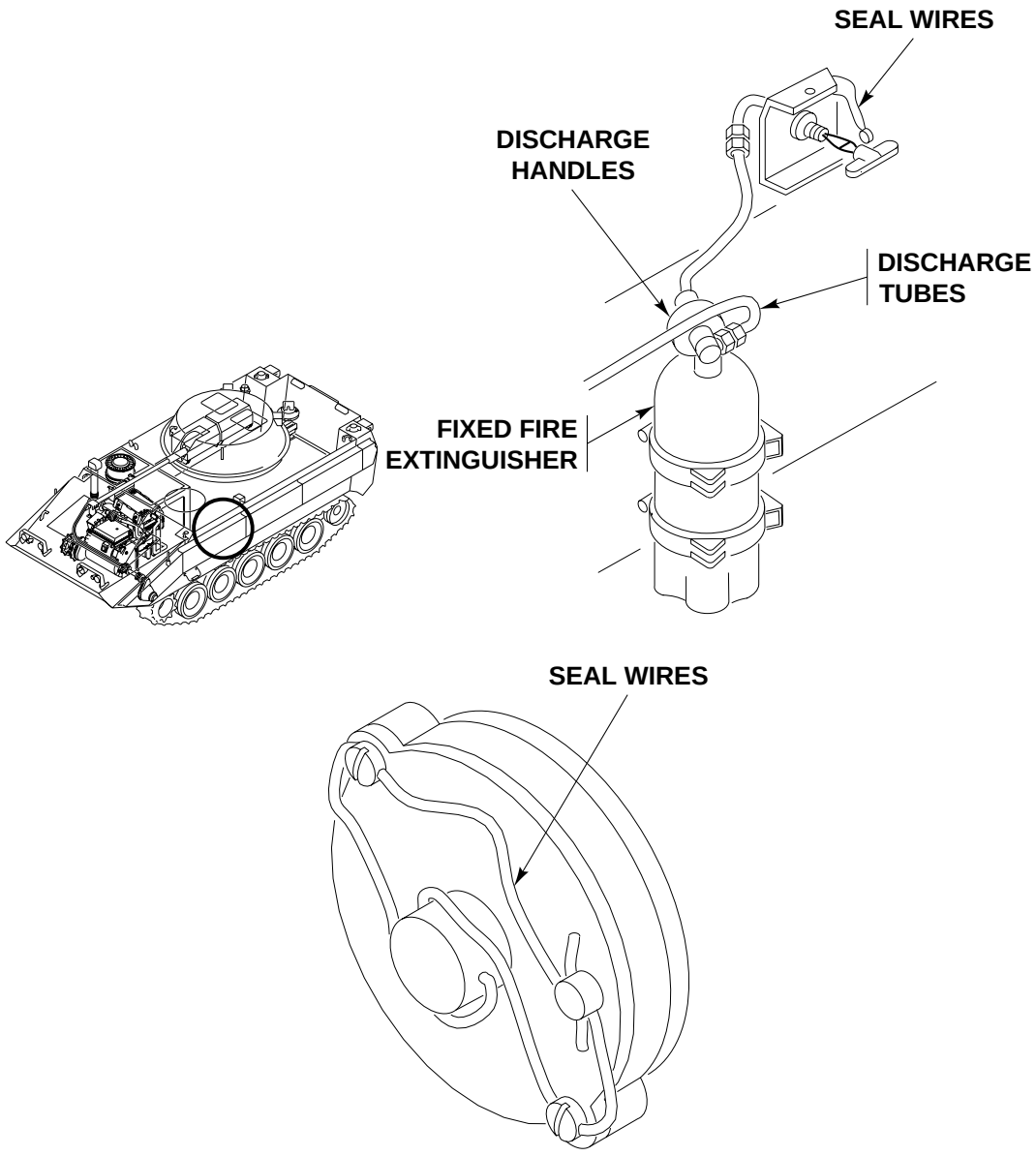

ITEM NO.	INTERVAL	MAN-HOUR	ITEM TO BE CHECKED OR SERVICED	CREWMEMBER PROCEDURE	EQUIPMENT NOT READY/ AVAILABLE IF:
65	Semiannual or 1500 miles		Batteries	**WARNING** **Battery posts and power cables can short circuit and burn you.** **Remove vehicle ground cable before starting task. Do not touch battery posts with tools or other metal objects. Do not wear jewelry when working with battery or electrical system.** **WARNING** **Gas from batteries can explode and injure you.** **Use caution when charging or working near batteries. Disconnect battery ground before working in battery compartment. Do not smoke or allow sparks and flame near the batteries.** a. Check electrolyte level in all cell batteries. Add distilled water as needed. See TM 9-6140-200-14. b. Test specific gravity of batteries. See TM 9-6140-200-14. Use antifreeze and battery tester.	One or more batteries unserviceable, missing, cables frayed or broken. Specific gravity is not within set standards.

ITEM NO.	INTERVAL	MAN-HOUR	ITEM TO BE CHECKED OR SERVICED	CREWMEMBER PROCEDURE	EQUIPMENT NOT READY/ AVAILABLE IF:
				c. Clean vent holes in cell caps. Replace missing or damaged caps.	Any leaks, loose, damaged, cracked, broken, or missing battery or hardware.
				d. Clean terminals, posts, and bolts.	
				e. Tighten terminals and bolts with care to avoid damage to batteries. Apply light coat of grease.	

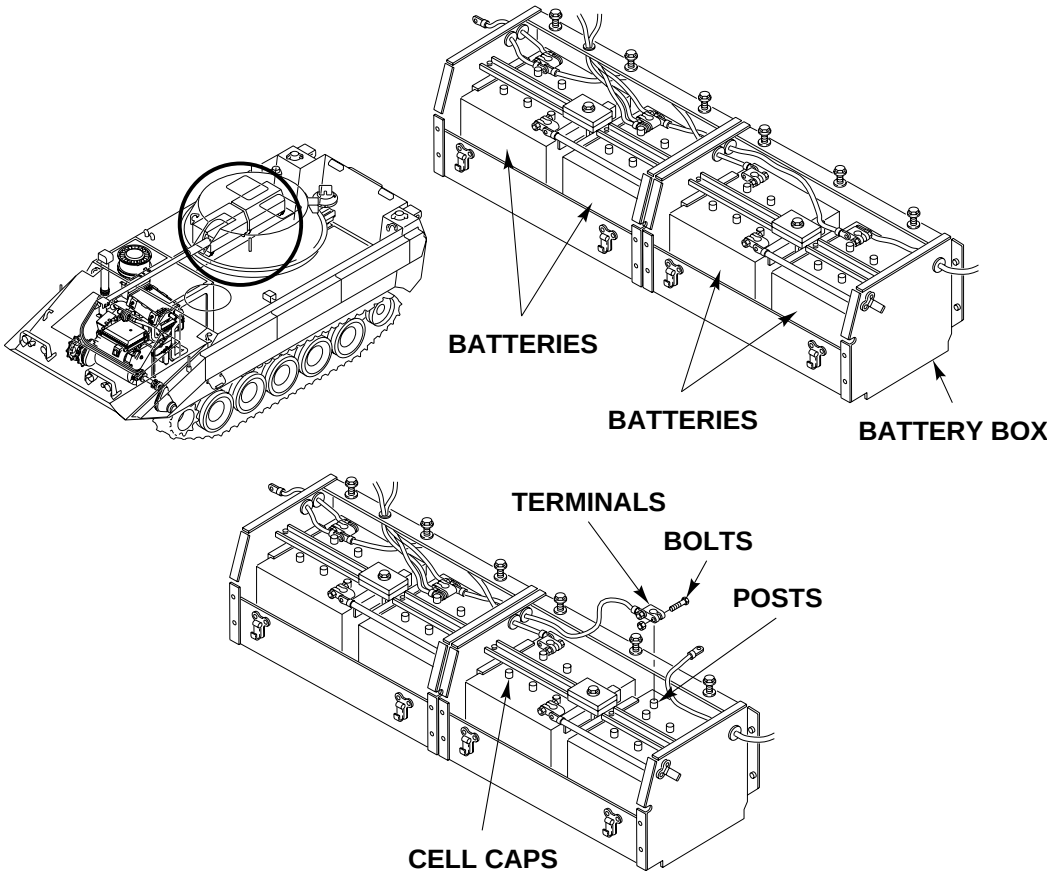

ITEM NO.	INTERVAL	MAN-HOUR	ITEM TO BE CHECKED OR SERVICED	CREWMEMBER PROCEDURE	EQUIPMENT NOT READY/ AVAILABLE IF:
66	Semiannual or 1500 miles		Driver's Hatch	a. Replace hard, cracked, or cut cushioning pad. b. Check periscope quick release for smooth operation. c. Check vision blocks for cracks and chips. d. Replace vision blocks that have more than 50 percent impairment.	Any missing lock pins or latches that fail to secure hatch in any position.
				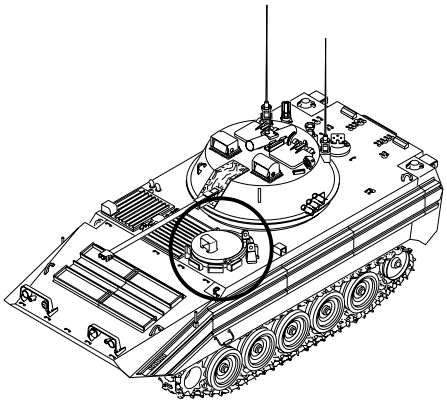 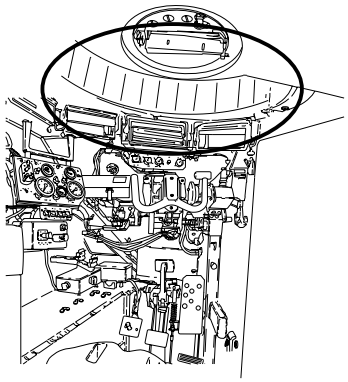	
				e. Push driver's release handle up and measure between hatch release handle and washer. Make sure gap is 0.06 to 0.09 inch (1.5 to 2.3 mm). If clearance is not within limits, loosen or tighten nut on cable end, as required.	

ITEM NO.	INTERVAL	MAN-HOUR	ITEM TO BE CHECKED OR SERVICED	CREWMEMBER PROCEDURE	EQUIPMENT NOT READY/ AVAILABLE IF:
67	Semiannual or 1500 miles		Dome Lights	a. Check that all dome lights work correctly. Troubleshoot faulty lights. b. Tape frayed electrical leads and replace faulty connectors.	
68	Semiannual or 1500 miles		Driver's Seat	a. Replace damaged seat components.	Any missing, broken, or cracked seat hardware less seat cushions or locking mechanism fail to lock in any position.

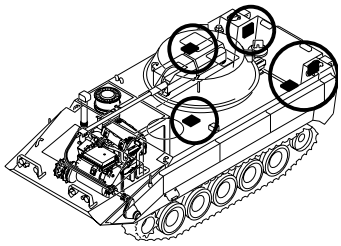

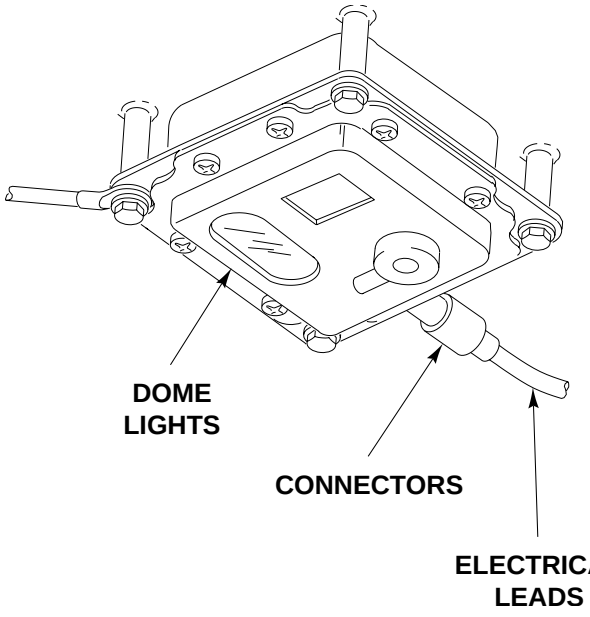

ITEM NO.	INTERVAL	MAN-HOUR	ITEM TO BE CHECKED OR SERVICED	CREWMEMBER PROCEDURE	EQUIPMENT NOT READY/ AVAILABLE IF:
				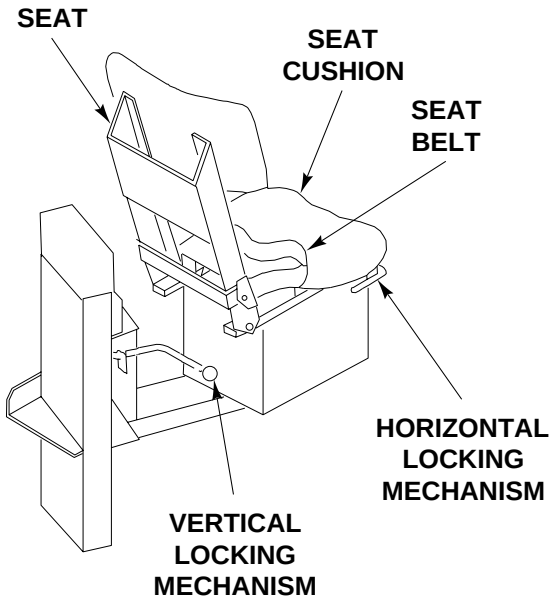	
				b. Replace seat belts with cuts, frayed, or broken buckle.	Seat belt missing, cut, frayed, or broken.
				WARNING **Seat may move suddenly up or down when the control knob is released.** **Keep hands away from seat post. Lift your weight off of seat before releasing control knob. Use weight to control movement of seat.**	
				c. See that seat vertical locking mechanism and horizontal locking mechanism work properly. Lubricate locking mechanism as needed with OE/HDO.	

ITEM NO.	INTERVAL	MAN-HOUR	ITEM TO BE CHECKED OR SERVICED	CREWMEMBER PROCEDURE	EQUIPMENT NOT READY/ AVAILABLE IF:
69	Semiannual or 1500 miles		Personnel Seats	a. Repair or replace damaged seat cushions. b. Repair or replace cut, frayed, or broken seat belts.	Any missing, broken, or cracked seat hardware less seat cushions or seat belt missing, cut, frayed, or broken
				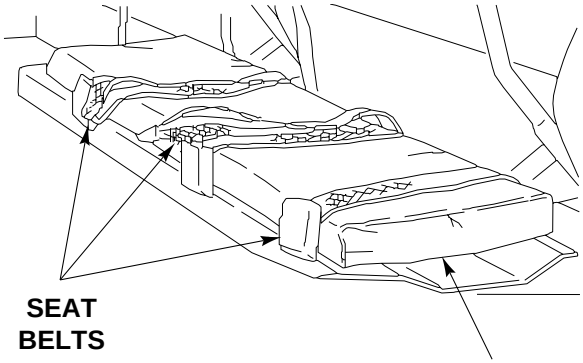 **SEAT BELTS** **SEAT CUSHIONS**	
70	Semiannual or 1500 miles		Data Plates, Decals, Stencils, and Markers	a. Replace missing or damaged data plates, decals, stencils, and markers.	
71	Semiannual or 1500 miles		Vehicle	a. Lubricate steering control lever and shaft bearings every 150 hours/1,500 miles or semi-annually with GAA. b. Lubricate tachometer and speedometer shafts annually with GAA. Disconnect shafts at both ends, remove slotted washers from drive ends of cores and remove cores from instrument panel end of shafts. c. Clean, inspect, and lubricate cores. Insert cores in shafts. Install slotted washers and connect ends of shafts. If tachometer adapter has a grease fitting, lubricate sparingly with GAA.	

ITEM NO.	INTERVAL	MAN-HOUR	ITEM TO BE CHECKED OR SERVICED	CREWMEMBER PROCEDURE	EQUIPMENT NOT READY/ AVAILABLE IF:
72	Semiannual or 1500 miles		Final Road Test	a. Perform final vehicle road test. Drive vehicle at least 5 miles (8 km). b. Ensure correction of operation faults. Pay close attention to those items that were faulty to begin with.	Any Class III leaks or operational faults.
a			Left and Right Steering	**CAUTION** **Power plant can be damaged. Do not pivot steer when vehicle is moving except on a track failure emergency.** a. Check steering in left and right turns. If vehicle doesn't finish a complete turn when wheel is turned left or right, troubleshoot steering system.	
b			Steering in Forward and Reverse	a. Check steering in forward and reverse. If vehicle doesn't finish a complete turn when wheel is turned left or right, troubleshoot steering system.	
c			Vehicle Braking	a. If vehicle doesn't slow down with brake pedal slightly pressed or stop when pedal is fully depressed, troubleshoot brake selection system.	Vehicle fails to slow or stop.
d			Vehicle Shifting in all Ranges	a. Check shifting of vehicle in all ranges. If vehicle doesn't respond properly to selected driving range, troubleshoot gear system.	Vehicle fails to slow or stop.
73	Semiannual or 1500 miles		Personnel Heater Kit	**WARNING** **Turret can rotate and severely injure or kill you. Do not reach through turret shield opening when turret power is on. Keep turret shield door closed whenever turret drive power is on. Engage turret travel lock before moving or reaching through turret shield opening.**	

ITEM NO.	INTERVAL	MAN-HOUR	ITEM TO BE CHECKED OR SERVICED	CREWMEMBER PROCEDURE	EQUIPMENT NOT READY/ AVAILABLE IF:
				a. Tighten loose mounting screws and nuts. b. Remove control cover by turning two screws to the left. c. Check flame detector switch and ignition control. See TM 9-2540-205-24&P. d. Rotate turret to gain access. See TM 9-2350-366-10-2.	Any fuel, coolant, or exhaust leaks.

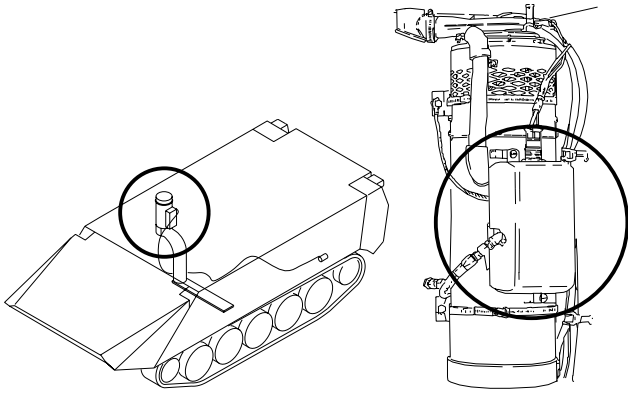

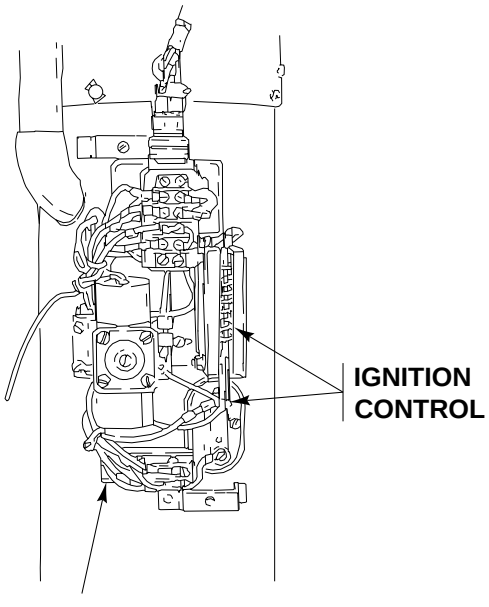

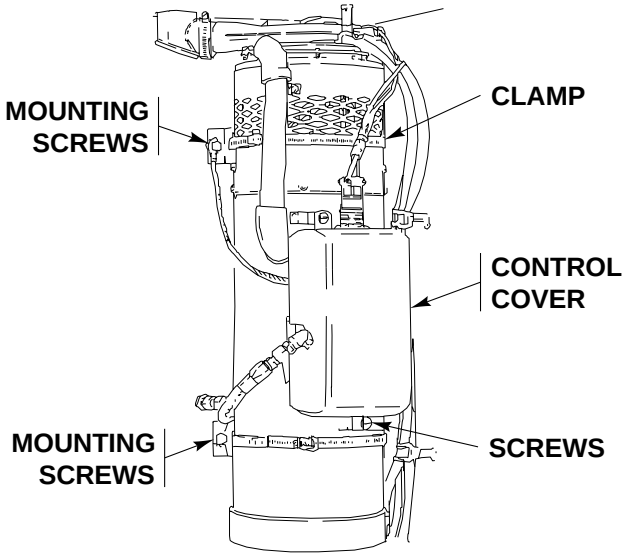

ITEM NO.	INTERVAL	MAN-HOUR	ITEM TO BE CHECKED OR SERVICED	CREWMEMBER PROCEDURE	EQUIPMENT NOT READY/ AVAILABLE IF:
				e. Check heater fuel pump, fuel lines, and connections for leaks. Replace connections that leak. f. Check for signs of exhaust leaks. Tighten clamps.	

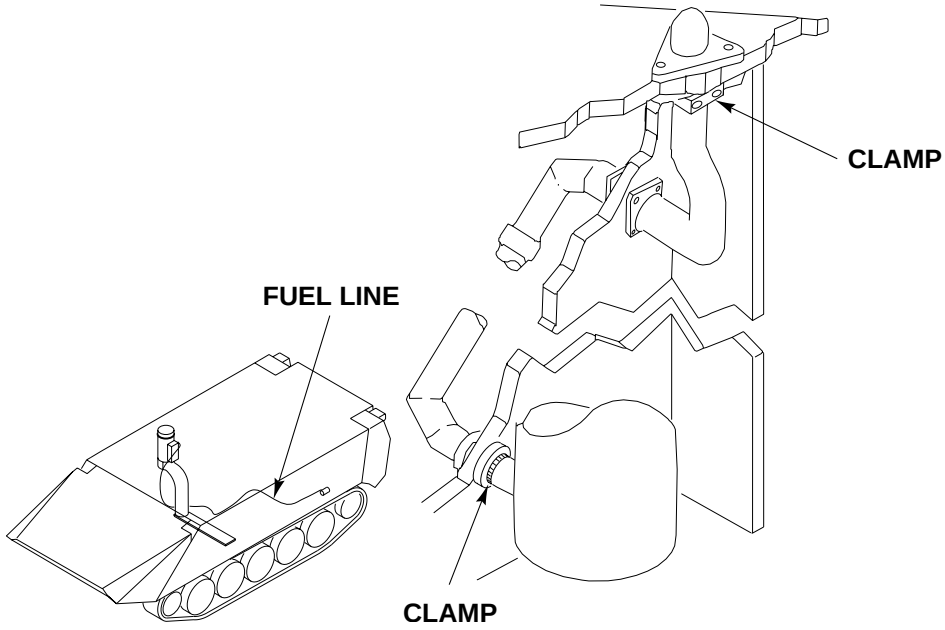

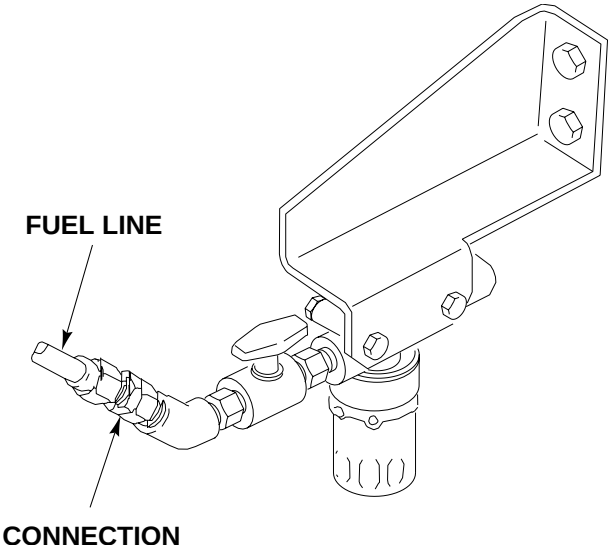

ITEM NO.	INTERVAL	MAN-HOUR	ITEM TO BE CHECKED OR SERVICED	CREWMEMBER PROCEDURE	EQUIPMENT NOT READY/ AVAILABLE IF:

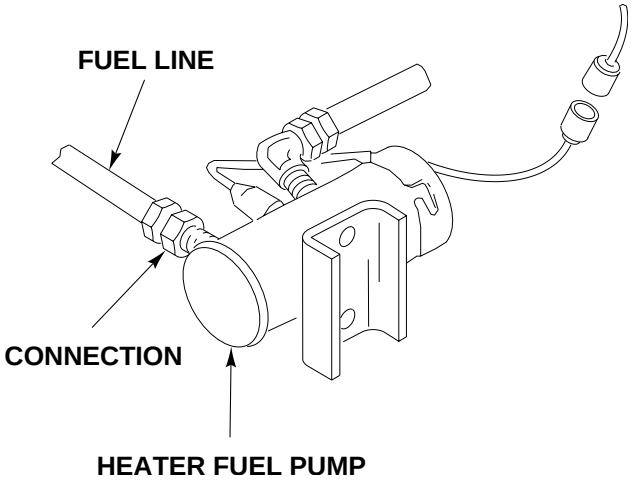

				g. Check electrical leads and connectors at heater, at heater control box, and at fuel pump. Tape leads if frayed. Replace damaged connectors.	

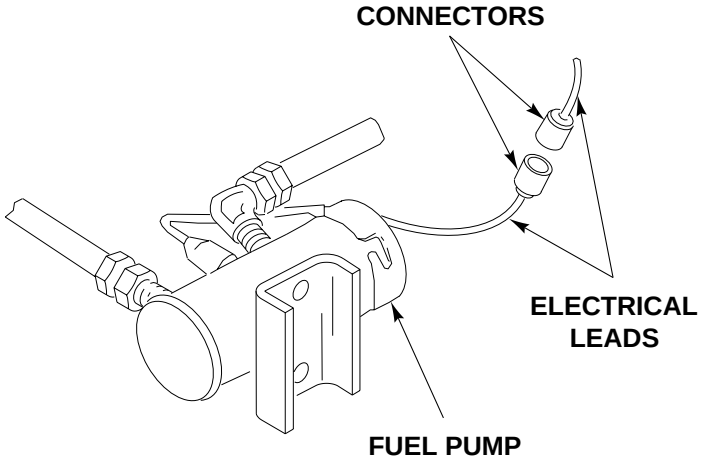

ITEM NO.	INTERVAL	MAN-HOUR	ITEM TO BE CHECKED OR SERVICED	CREWMEMBER PROCEDURE	EQUIPMENT NOT READY/ AVAILABLE IF:
				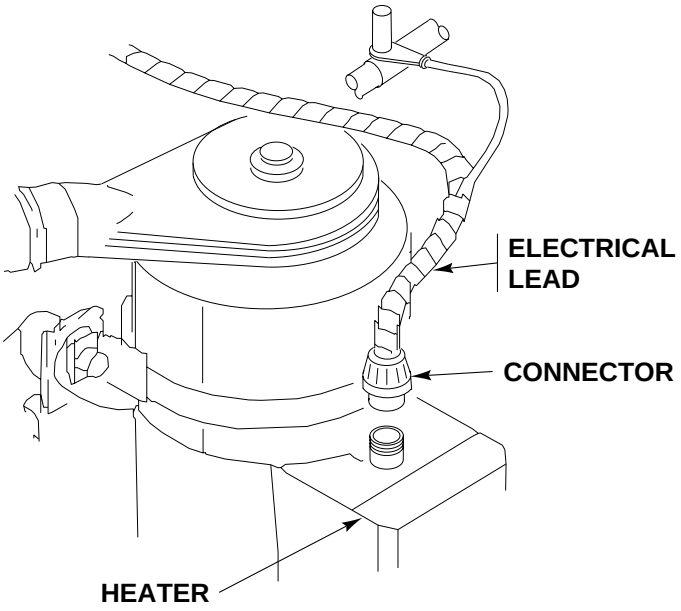 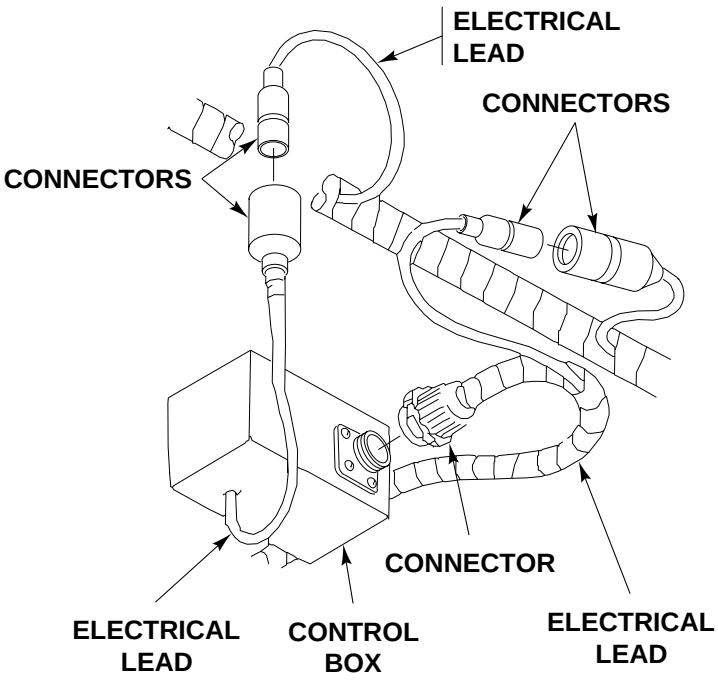 h. Check heater control box, switches, and light bulb. Tighten or replace bad switches and bulbs.	

ITEM NO.	INTERVAL	MAN-HOUR	ITEM TO BE CHECKED OR SERVICED	CREWMEMBER PROCEDURE	EQUIPMENT NOT READY/ AVAILABLE IF:
				i. Start, run, and stop heater. See TM 9-2350-366-10-1. During start cycle, check that switches and light work properly. Check for increase in blower speed after ignition. j. During operation, check for unusual noises. Check for differences between high and low heat levels. k. When stopping heater, check for correct purge cycle. Verify that indicator light operates properly. If heater does not operate as specified above, perform troubleshooting.	
74	Semiannual or 1500 miles		Driver's Windshield Kit	a. Clean windshield with clean water. Check windows. Replace cracked or chipped windshield. b. Check windshield. Replace windshield that has broken or missing legs.	

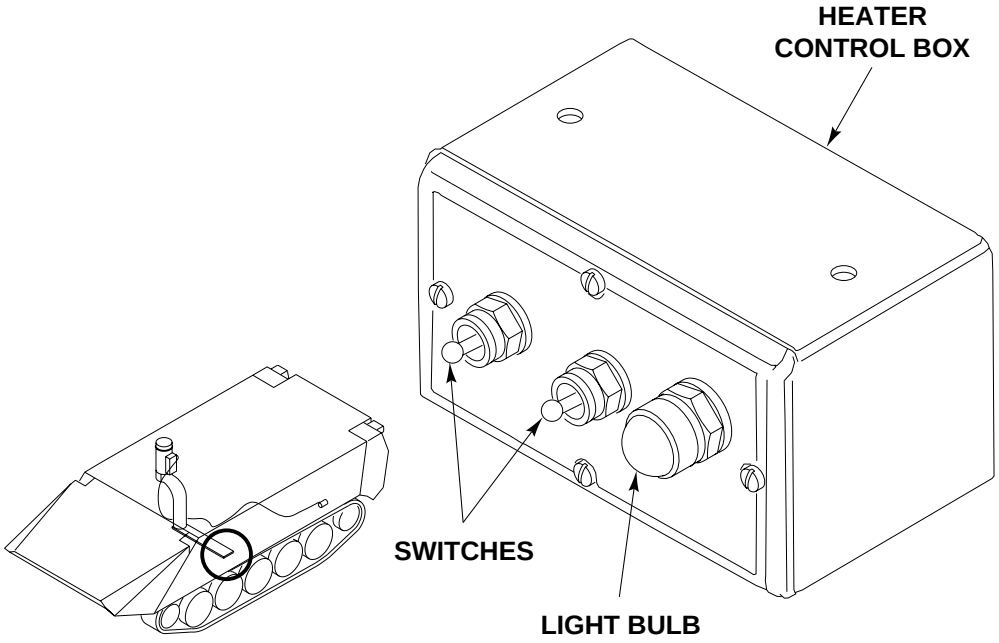

ITEM NO.	INTERVAL	MAN-HOUR	ITEM TO BE CHECKED OR SERVICED	CREWMEMBER PROCEDURE	EQUIPMENT NOT READY/ AVAILABLE IF:
				c. Check mounting bracket and plates. Replace damaged brackets and plates. d. Check windshield canvas. Repair tears with sealing tape or replace windshield.	
				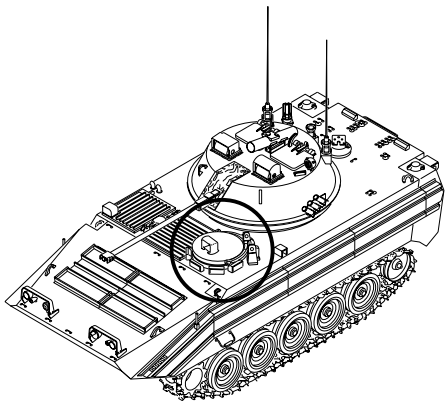 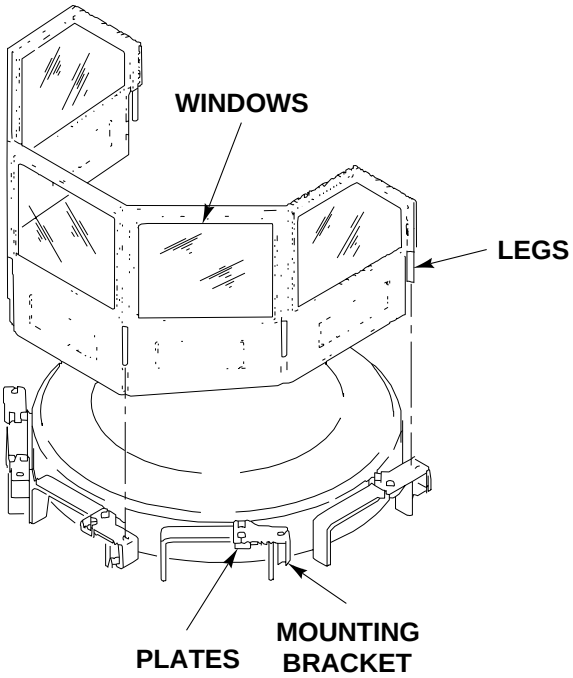	
75	Semiannual or 1500 miles		Turn Signal Lights, Stop Lights, Blackout Stop Lights, Dome Lights, Fluorescent Lights, and Switches	a. Test operation of lights with signal control in all four operating positions. Repair or replace damaged or discolored lenses. Repair or replace defective lights, control, flasher, and lights.	

ITEM NO.	INTERVAL	MAN-HOUR	ITEM TO BE CHECKED OR SERVICED	CREWMEMBER PROCEDURE	EQUIPMENT NOT READY/ AVAILABLE IF:
76	Semiannual or 1500 miles		Reflectors	a. Check reflectors lens. Replace damaged or missing lens.	
77	Semiannual or 1500 miles		Electrical Wiring	a. Tighten electrical connections and mounting brackets. Tape frayed harness. Replace missing or damaged connectors.	
78	Semiannual or 1500 miles		Slave Cable	a. Check the slave cable receptacle and cap for damage, burnt condition, and corrosion.	

REPLACE DATAPLATES, STENCILS, MARKERS, AND DECALS 0105 00

THIS WORK PACKAGE COVERS:

Removal (page 0105 00-1).
Cleaning (page 0105 00-1).
Installation (page 0105 00-2).

INITIAL SETUP:

Maintenance Level

Unit

Tools and Special Tools

General Mechanic's Tool Kit (WP 0397 00, Item 64)

Materials/Parts

Cleaning compound (WP 0399 00, Item 17)
Drive screw (as needed)

Personnel Required

Unit Mechanic 63T10

References

TM 9-2350-366-10-1
TM 43-0139

Equipment Condition

Engine stopped (TM 9-2350-366-10-1)

Vehicle blocked (TM 9-2350-366-10-1)

REMOVAL

NOTE

Dataplates and markers should be cleaned or replaced when they become too hard to read.

Dataplates are secured to bulkheads with drive screws.

1. REMOVE HEADS OF DRIVE SCREWS (1) AND DATAPLATE (2) FROM HULL.

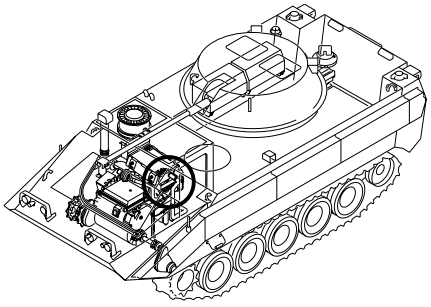

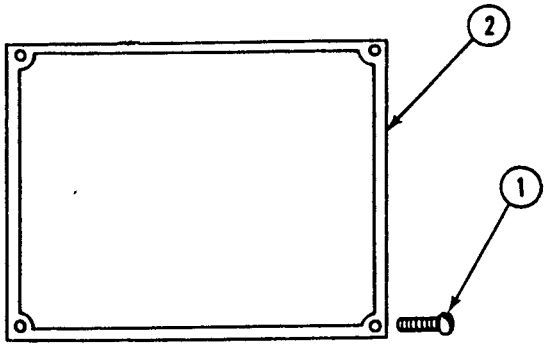

2. REMOVE HARD TO READ STENCILS WITH CLEANING COMPOUND.
3. REMOVE HARD TO READ OR DAMAGED MARKERS AND DECALS BY SCRAPING.

CLEANING

1. CLEAN HULL SURFACE WHERE DATAPLATE, STENCIL, MARKER, OR DECAL IS TO BE APPLIED WITH CLEANING COMPOUND.

INSTALLATION

1. PLACE OLD DATAPLATE ON HULL SO THAT HOLES IN PLATE DO NOT ALIGN WITH HOLES IN HULL. USING OLD DATAPLATE AS A TEMPLATE, DRILL FOUR NEW HOLES.
2. ALIGN NEW DATAPLATE (1) WITH FOUR NEW HOLES. SECURE DATAPLATE TO HULL WITH FOUR NEW DRIVE SCREWS (2).

NOTE

If carrier identification plate is being replaced, make sure replacement dataplate contains data that belongs to specific carrier.

3. CHECK APPLICABLE STENCIL CHART (WP 0400 00) FOR LOCATION OF STENCIL, AND PAINT NEW STENCIL. See TM 43-0139.
4. CHECK APPLICABLE DECAL AND MARKER CHART (WP 0400 00) FOR LOCATION OF DECAL OR MARKER (3). REMOVE BACKING FROM DECAL OR MARKER AND PRESS ON SURFACE.

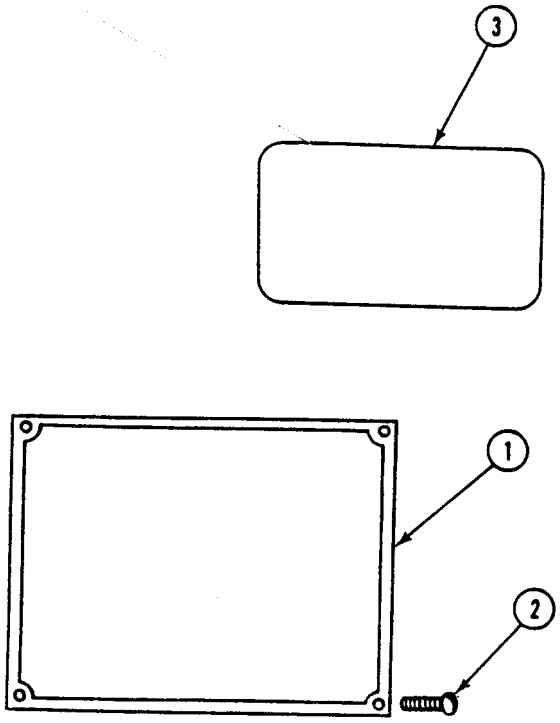

END OF TASK

CHAPTER 4

UNIT MAINTENANCE INSTRUCTIONS FOR ENGINE

WORK PACKAGE INDEX

Title	Sequence No.
REMOVE/INSTALL POWER PLANT ASSEMBLY	0106 00
BLOCK POWER PLANT	0107 00
REPLACE ENGINE MOUNTS	0108 00
REPLACE LEFT AIR BOX DRAIN CHECK VALVE AND TUBES	0109 00
REPLACE RIGHT AIR BOX DRAIN CHECK VALVE AND TUBES	0110 00
REPLACE ENGINE LIFTING BRACKET	0111 00
REPLACE ENGINE OIL FILLER CAP	0112 00
REPLACE ENGINE OIL SAMPLING VALVE AND HOSE	0113 00
REPLACE OIL GAUGE ROD AND TUBE	0114 00
REPLACE STARTER	0115 00

REMOVE/INSTALL POWER PLANT ASSEMBLY 0106 00

THIS WORK PACKAGE COVERS:

Removal (page 0106 00-1).
Installation (page 0106 00-14).

INITIAL SETUP:

Maintenance Level
Unit

Tools and Special Tools
General Mechanic's Tool Kit (WP 0397 00, Item 64)
Power plant sling (WP 0397 00, Item 48)
Torque wrench, 1/2 inch drive, 0–175 ft-lb (WP 0397 00, Item 83)

Materials/Parts
Cotter pin (5)
Gasket
Locknut (7)
Lockwasher (2)
Propeller shaft screw (4)
Spring tension washer
Strap

Personnel Required
Unit Mechanic 63T10
Helper (H)

References
TM 9-2350-366-10-1
TM 9-2350-366-10-2

Equipment Condition
Engine stopped (TM 9-2350-366-10-1)
Vehicle blocked (TM 9-2350-366-10-1)
Driver's power plant access panel removed (WP 0312 00)
Power plant rear access panel removed (WP 0309 00)
Propeller shafts and U-joints removed (WP 0276 00)
Cooling system drained (WP 0155 00)
Battery ground strap disconnected (WP 0237 00)
Front VISMOD access doors removed (WP 0307 00)
Engine access cover plate removed (WP 0308 00)
Power plant grill raised (WP 0335 00)
Power plant sling preoperative check performed (WP 0336 00)

REMOVAL

1. DISCONNECT AIR SUPPLY HOSE (17) FROM ELBOW (18) ON AIR CLEANER (11).

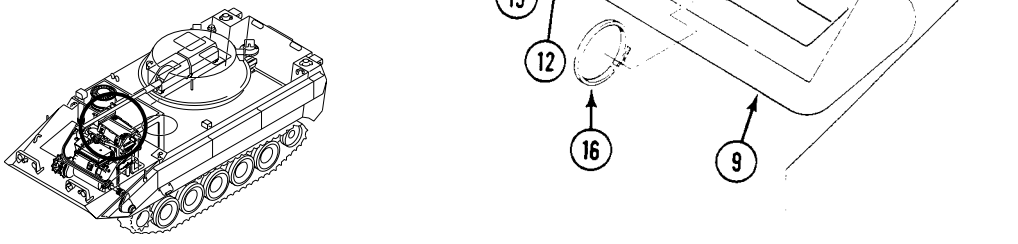

2. DISCONNECT AIR RESTRICTION INDICATOR HOSE (13) FROM BULKHEAD ADAPTER (14) AND REDUCER (15).

3. REMOVE STRAP (16) FROM HOSE (13) AND AIR INTAKE ELBOW (9). DISCARD STRAP.

4. LOOSEN TWO CLAMPS (12) AND REMOVE AIR INTAKE ELBOW (9) FROM TURBOCHARGER INLET (10) AND AIR CLEANER (11).

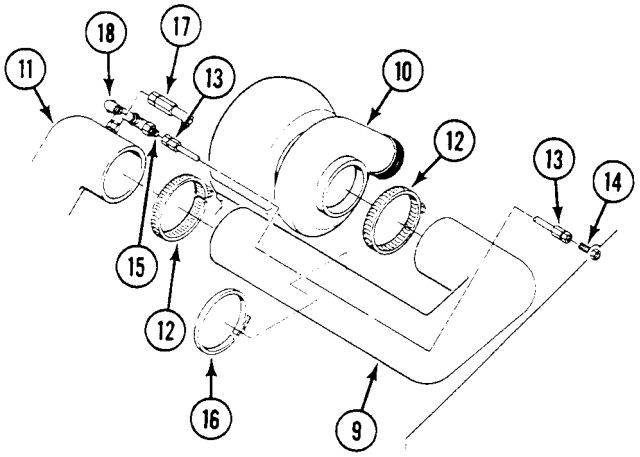

5. DISCONNECT RETURN AND SUPPLY FUEL HOSES (5) AND (6) AT QUICK DISCONNECTS (7) AND (8).

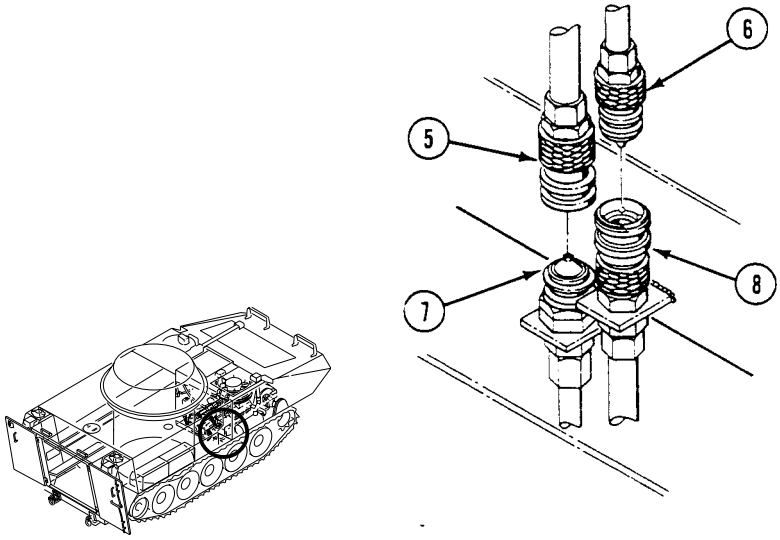

NOTE

Do Steps 6 - 7 only if coolant heater kit is installed.

6. IF ENGINE COOLANT HEATER KIT IS INSTALLED, LOOSEN CLAMP (11) AT COOLANT PUMP SHUTOFF VALVE (10) AND REMOVE HOSE (9).

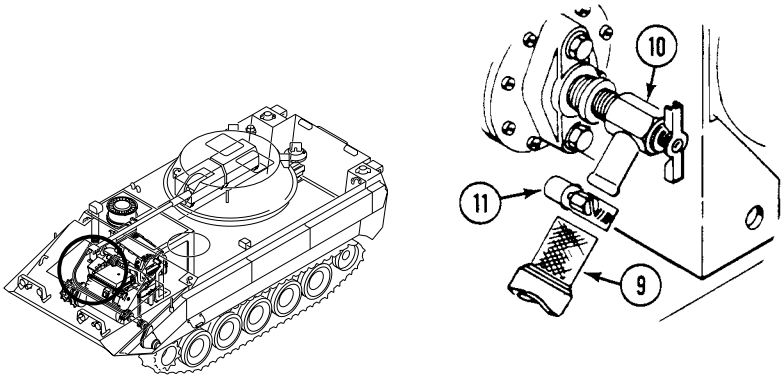

7. IF ENGINE COOLANT HEATER KIT IS INSTALLED, LOOSEN CLAMP (14) ON ENGINE COOLANT ELBOW (13) ON BOTTOM LEFT SIDE OF ENGINE MANIFOLD AND REMOVE HOSE (12) FROM CARRIER.

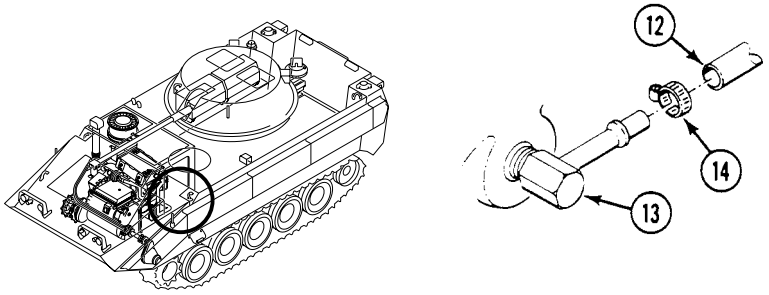

8. REMOVE LOCKNUT (8), SCREW (5), TWO WASHERS (6), SPRING TENSION WASHER (7) AND TWO GROUND LEADS (2) AND (3) FROM HULL GROUND LUG (4). DISCARD SPRING TENSION WASHER AND LOCKNUT.

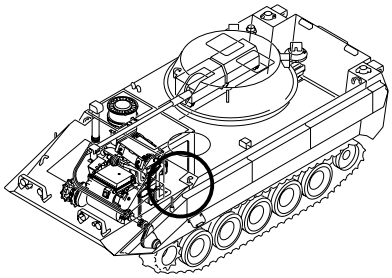

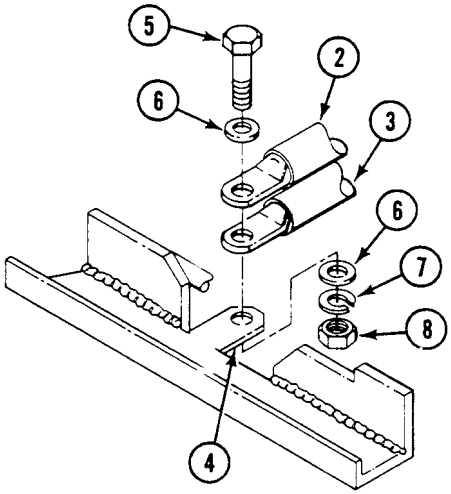

9. DISCONNECT FIVE CANNON PLUGS (1) AT DRIVER'S COMPARTMENT BULKHEAD.

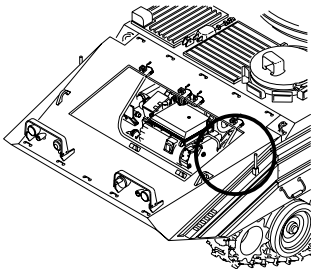

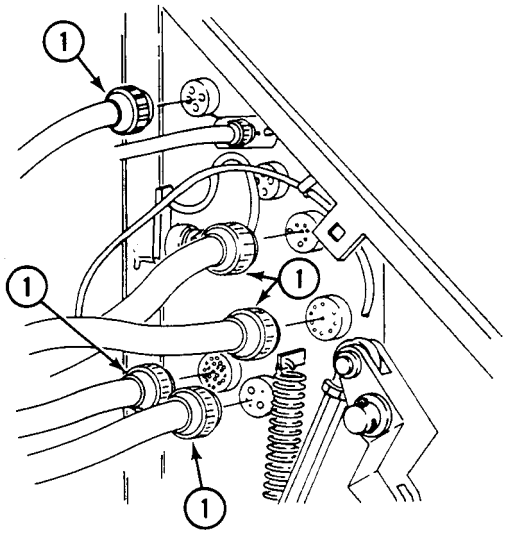

10. REMOVE COTTER PIN (23), STRAIGHT PIN (19), WASHER (22), AND SHUTOFF CABLE (20) FROM GOVERNOR ARM (21). DISCARD COTTER PIN.

11. REMOVE SCREW (27), WASHER (26), AND CLAMP (24) WITH SHUTOFF CABLE (20) FROM GOVERNOR HOUSING (25).

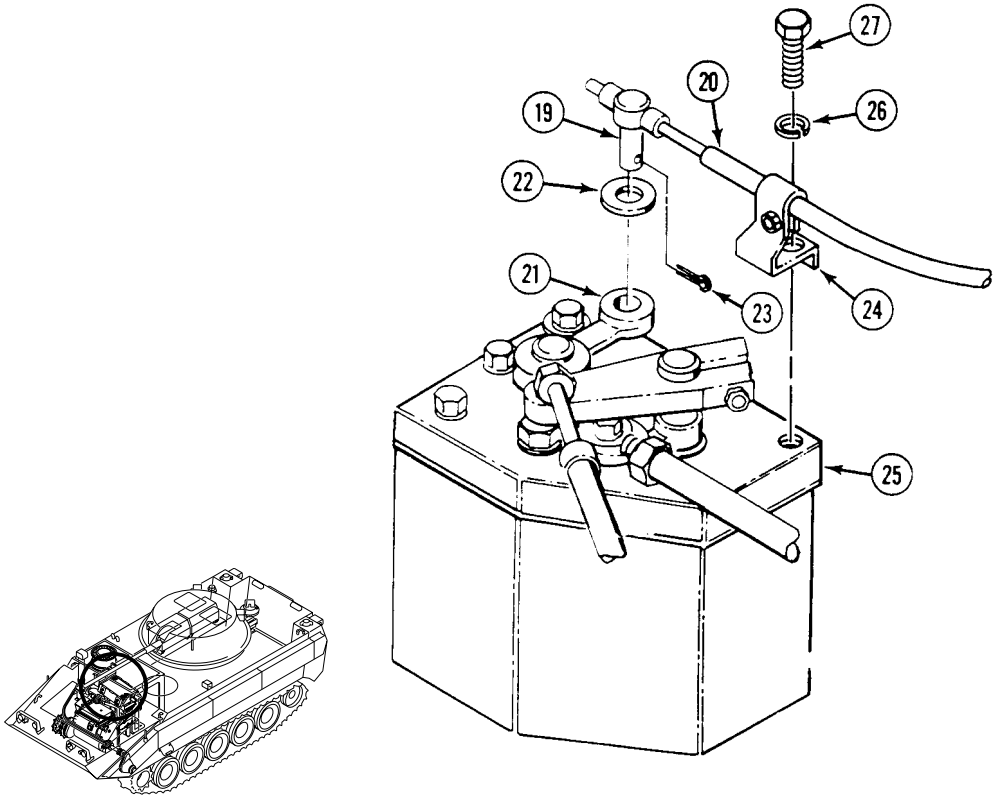

12. REMOVE LOCKNUT (18), WASHER (17), AND BOLT (16) FROM THROTTLE LINK (14). DISCONNECT THROTTLE LINK FROM THROTTLE ARM (15). DISCARD LOCKNUT.

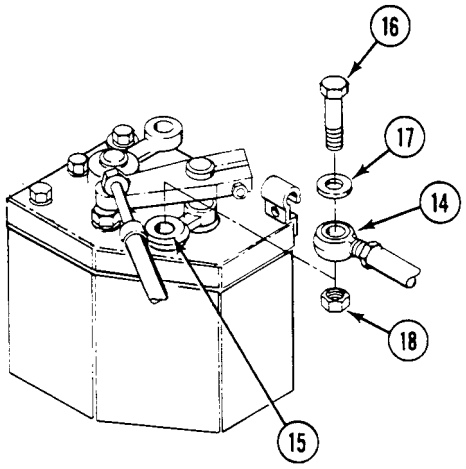

13. REMOVE LOCKNUT (4), SCREW (5), WASHER (6), CLAMP (2), AND TOW START CABLE (1) FROM BRACKET (3). REMOVE COTTER PIN (12), TWO WASHERS (11), (8), AND PIN (7) FROM CONTROL ARM (9). LOOSEN SET SCREW (13) AND REMOVE COLLAR (10) AND CABLE FROM ARM. DISCARD COTTER PIN AND LOCKNUT.

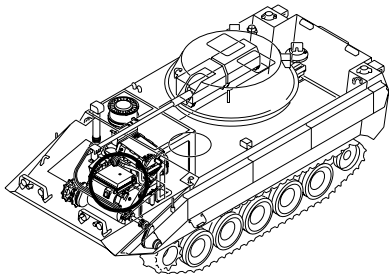

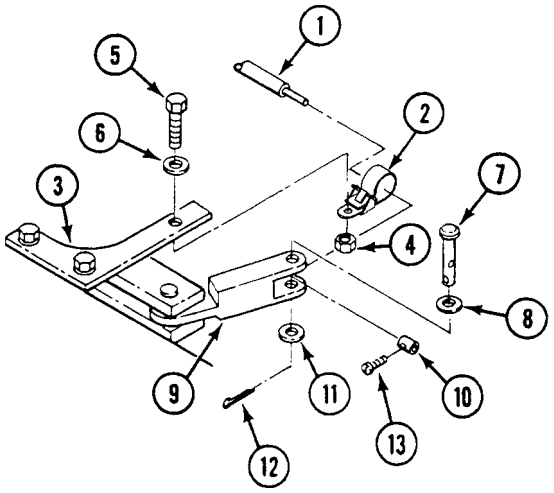

14. REMOVE TWO SCREWS (26), WASHERS (27), LOCKNUTS (28), AND LINK (23) FROM LINK (24) AND PIVOT SHAFT ARM (25). DISCARD LOCKNUTS.

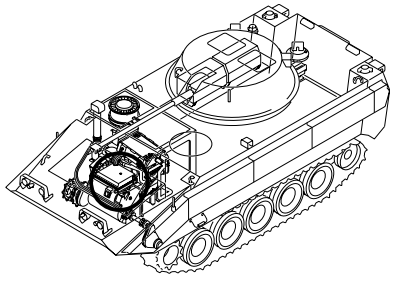

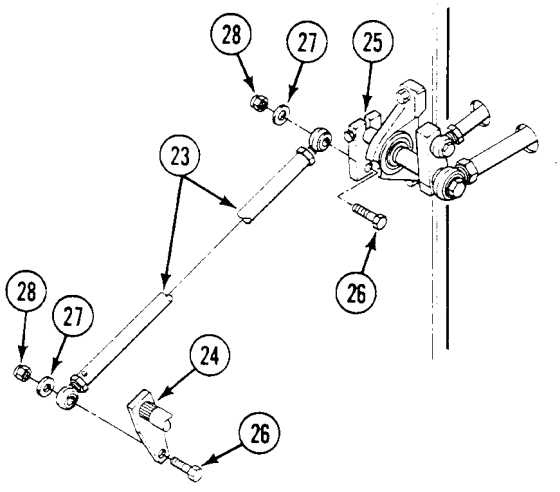

WARNING

Removing lower brake bearing from brake pivot shaft link while parking brake is on can cause shaft link to spring up and injure personnel. Disengage parking brake when doing this task.

15. REMOVE COTTER PIN (18), TWO WASHERS (17), PIN (16), AND LOWER BRAKE BEARING (12) FROM BRAKE PIVOT SHAFT LINK (5). DISCARD COTTER PIN.

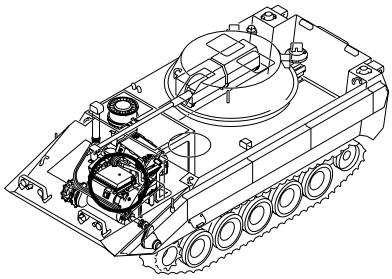

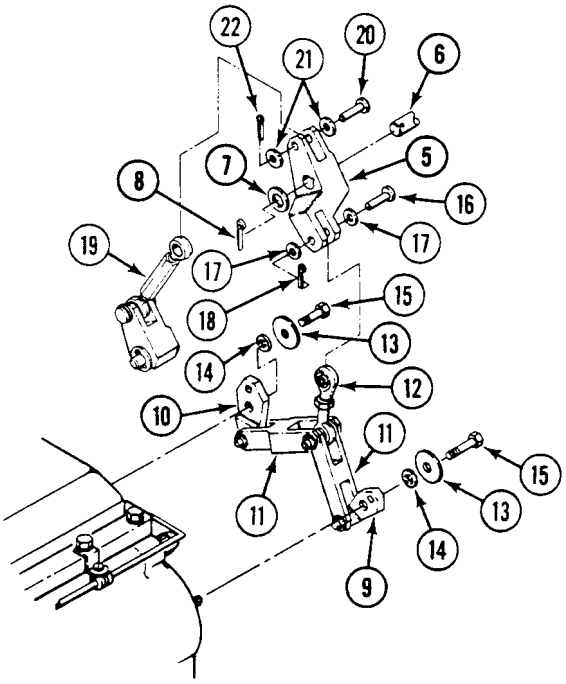

REMOVE/INSTALL POWER PLANT ASSEMBLY — Continued **0106 00**

16. REMOVE TWO SCREWS (15), WASHERS (13), LOCKWASHERS (14), AND BRAKE ARMS (9) AND (10) FROM TRANSMISSION. DISCARD LOCKWASHERS.

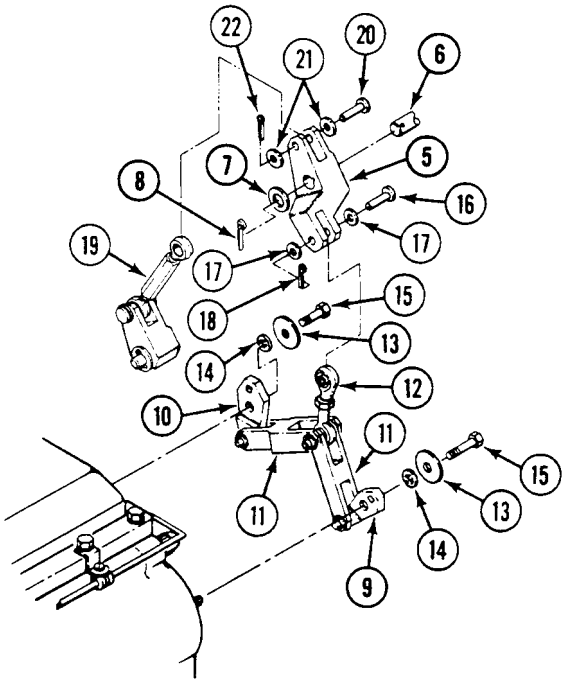

17. REMOVE COTTER PIN (22), TWO WASHERS (21), PIN (20), AND LINK (19) FROM LINK (5). DISCARD COTTER PIN.

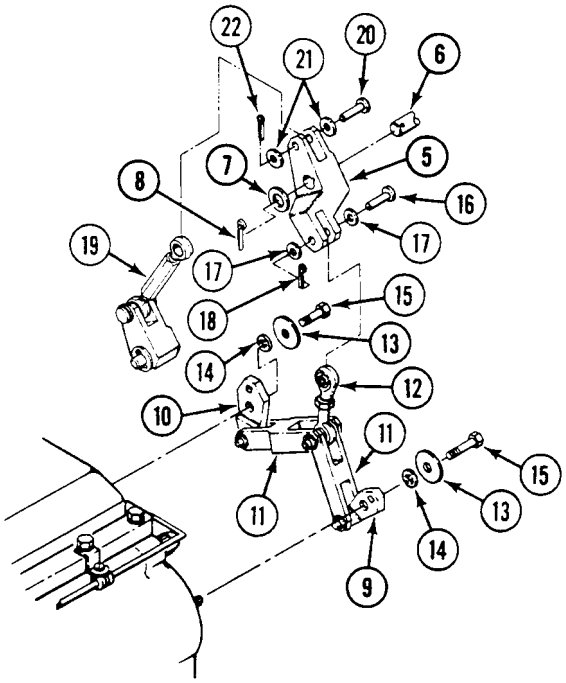

18. REMOVE COTTER PIN (8), WASHER (7), LINK (5) AND ASSEMBLY FROM SHAFT (6). DISCARD COTTER PIN.

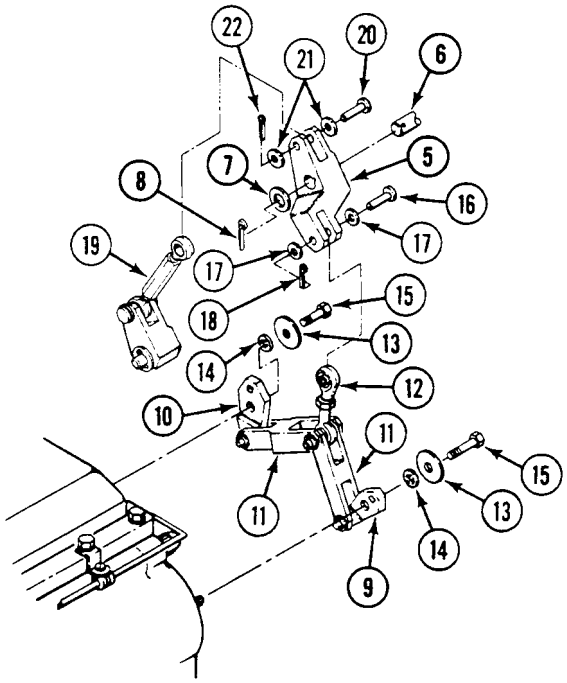

19. REMOVE TWO CLAMPS (4) FROM ELBOW (1) AND REMOVE ELBOW FROM EXHAUST MANIFOLD (3) AND TURBO INLET (2).

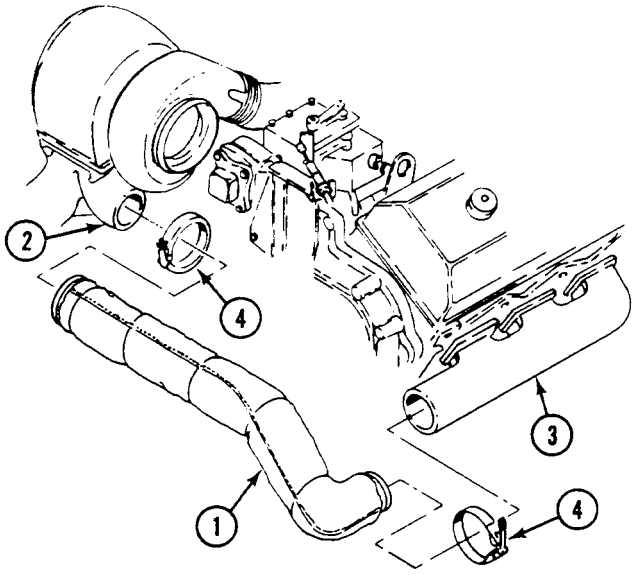

20. DISCONNECT TACHOMETER CABLE (8) FROM ADAPTER (9).

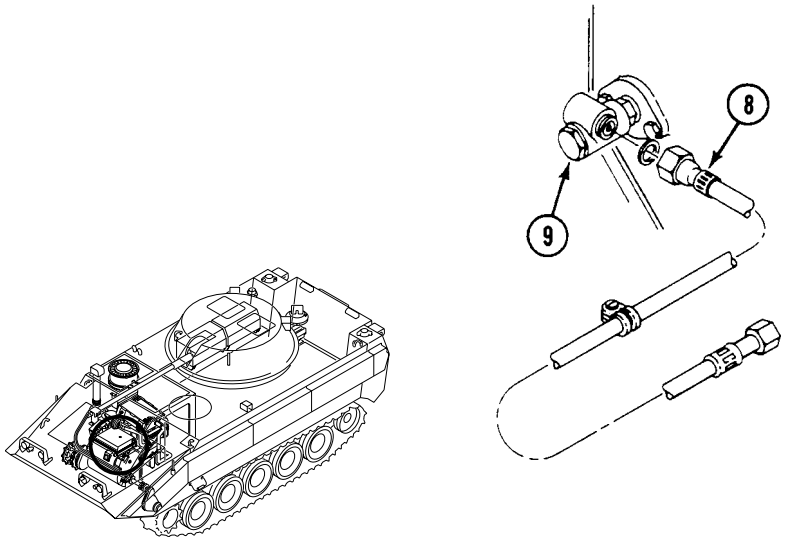

21. REMOVE AIR CLEANER COVER (7).

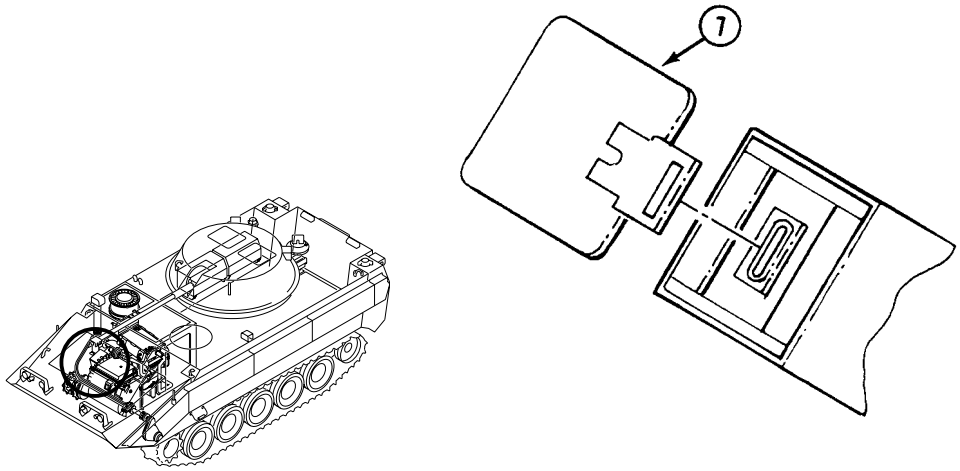

22. REMOVE FOUR SCREWS (5) AND WASHERS (6) FROM CAPS (3) AND TRANSMISSION MOUNTS (4). REMOVE CAPS.

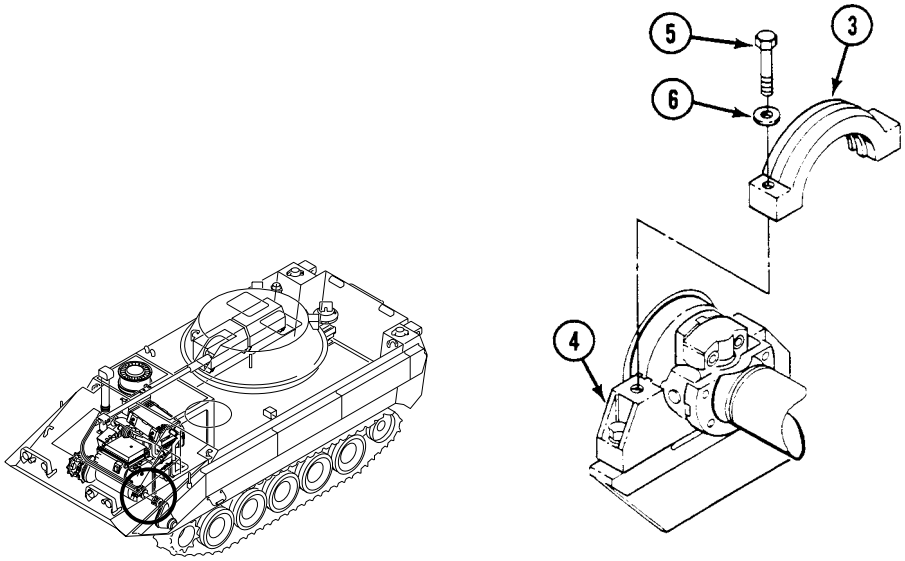

WARNING

Turret can rotate and severely injure or kill you. Do not reach through turret shield opening when turret power is on. Keep turret shield door closed whenever turret drive power is on. Engage turret travel lock before moving or reaching through turret shield opening.

WARNING

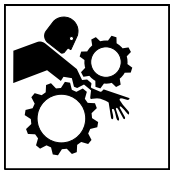

Working between turret and rear engine access panel can be hazardous. Make sure MASTER POWER switch and TURRET POWER switch are OFF. Notify other personnel you are working in this area.

23. MANUALLY TRAVERSE TURRET TO ACCESS REAR OF POWER PLANT. See TM 9-2350-366-10-2.

24. DISCONNECT ENGINE COUPLING CLAMPS (1) FROM REAR POWER PLANT MOUNT (2).

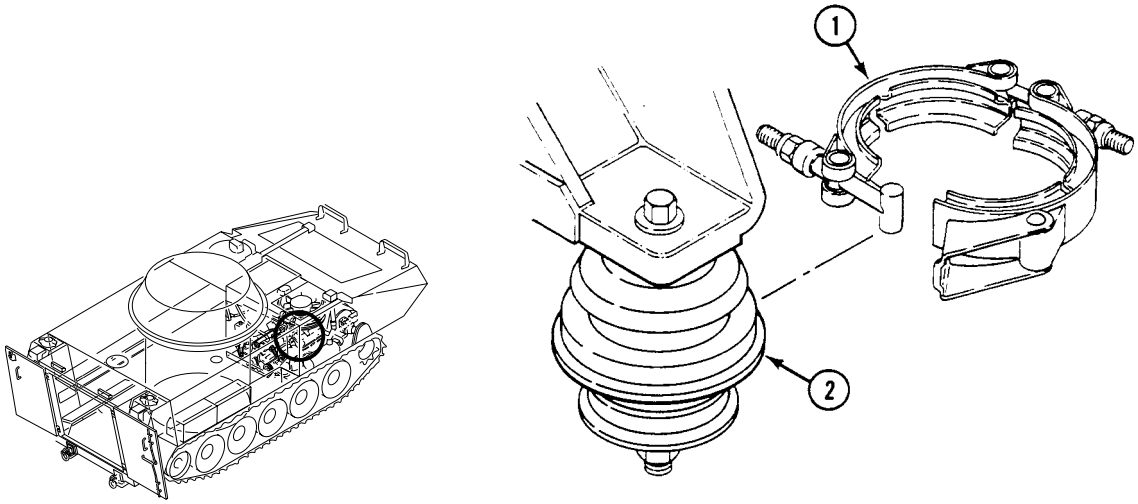

WARNING

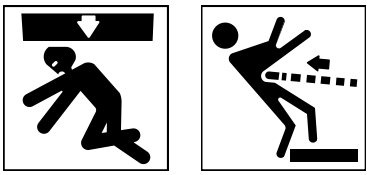

Damaged slings can fail when loaded. Breaking slings can strike and injure personnel. Suspended load can fall and crush personnel.

Inspect all slings before use. Do not use damaged slings. Clearly mark all damaged slings as DAMAGED - DO NOT USE.

WARNING

Hanging loads, heavy parts, and overhead equipment can fall unexpectedly and kill or injure you.

Stay clear of hanging loads, heavy parts, and overhead equipment. Use correct lifting devices. Always have helper guide heavy parts and equipment.

25. ATTACH POWER PLANT SLING (1) TO LIFTING BRACKETS (2) AND LIFT POWER PLANT ASSEMBLY. HAVE HELPER ASSIST.

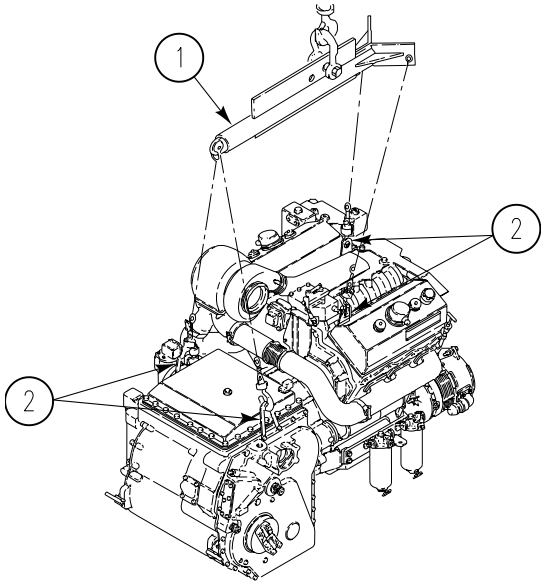

NOTE

Make sure spacer plate (half ring) stays in right side of transmission mount when power plant assembly is removed.

26. REMOVE POWER PLANT ASSEMBLY FROM VEHICLE AND PLACE ON BLOCKS. HAVE HELPER ASSIST.

INSTALLATION

1. ATTACH POWER PLANT LIFTING SLING (1) TO POWER PLANT. HAVE HELPER ASSIST.

NOTE

If engine mounts have been replaced, make sure mounts are aligned with hull mounts and nuts are torqued (WP 0108 00) before detaching sling.

Make sure spacer plate (half ring) is in the right side transmission mount slot before lowering power plant.

2. LOWER POWER PLANT INTO CARRIER. DETACH SLING (1). HAVE HELPER ASSIST.

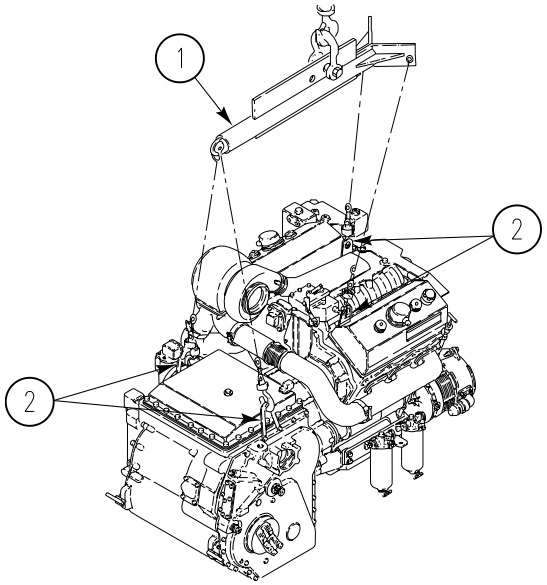

3. INSTALL ENGINE COUPLING CLAMPS (1) ON POWER PLANT MOUNTS (2).

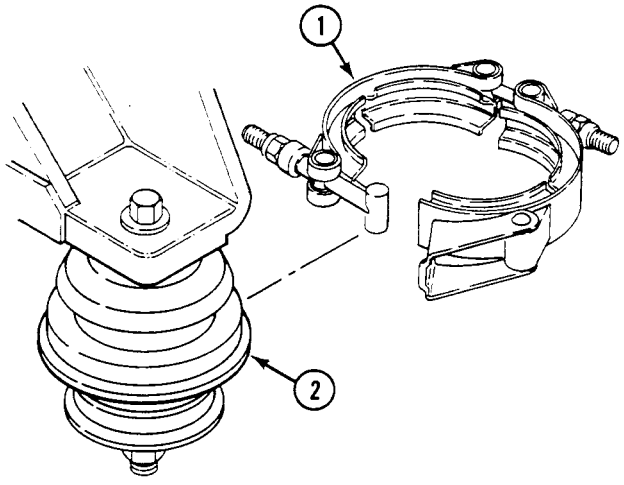

4. INSTALL CAPS (3) ON TRANSMISSION MOUNTS (4). SECURE WITH FOUR SCREWS (5) AND WASHERS (6). TIGHTEN SCREWS TO 86-94 LB-FT (107-126 N·m) TORQUE. USE TORQUE WRENCH.

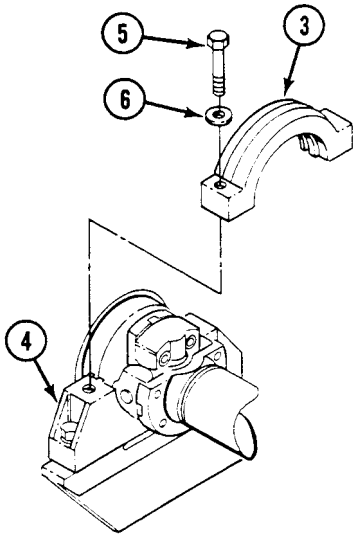

5. INSTALL AIR CLEANER COVER (7).

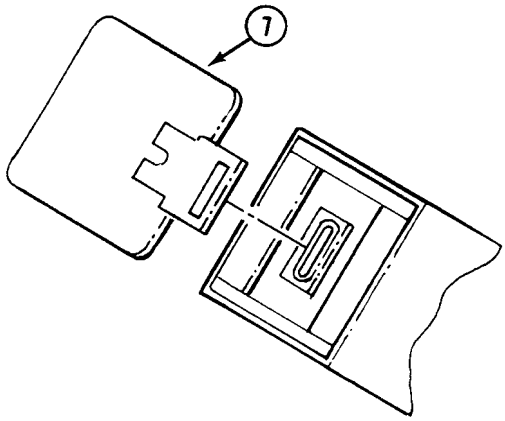

6. INSTALL TACHOMETER CABLE (8) ON TACHOMETER ADAPTER (9).

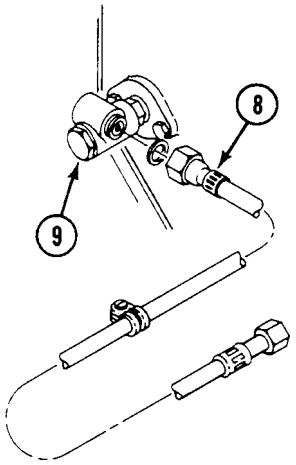

7. INSTALL ELBOW (1) ON TURBO INLET (2) AND EXHAUST MANIFOLD (3). SECURE WITH TWO CLAMPS (4).

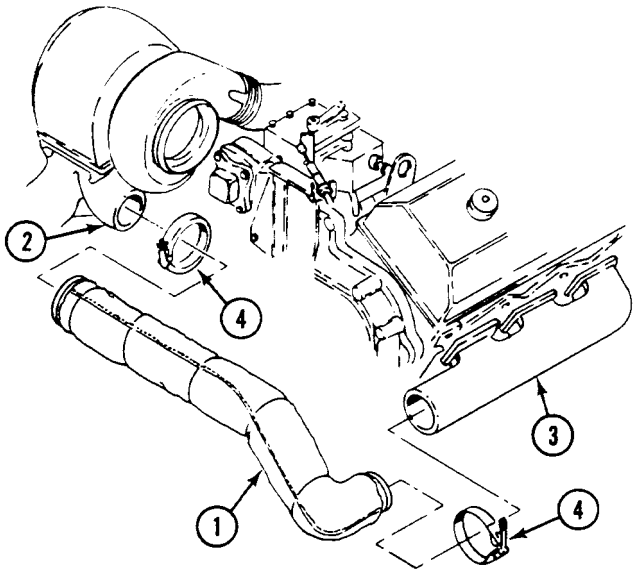

8. INSTALL PIVOT SHAFT LINK (5) ON PIVOT SHAFT (6). SECURE WITH WASHER (7) AND NEW COTTER PIN (8).

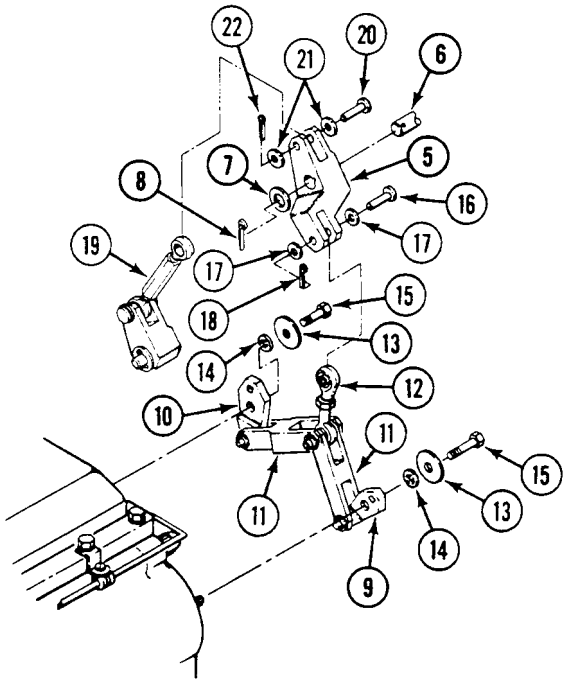

9. INSTALL BRAKE ARMS (9) AND (10), LINKS (11), AND BEARING (12) ON TRANSMISSION. SECURE WITH TWO WASHERS (13), NEW LOCKWASHERS (14), AND SCREWS (15).

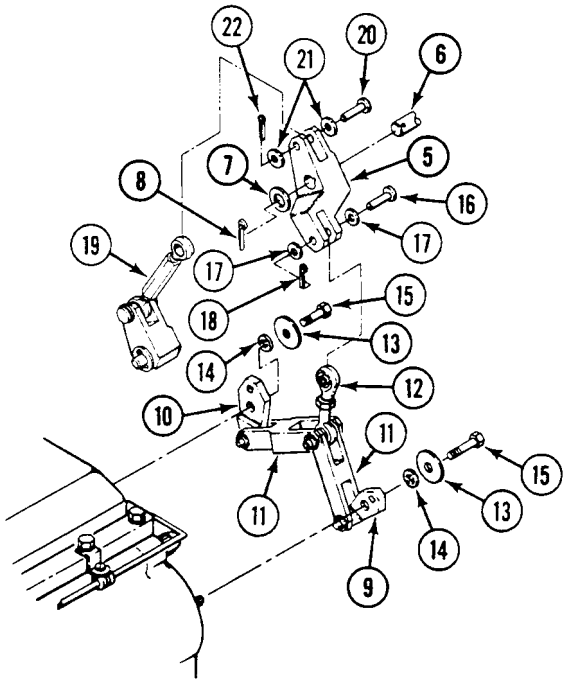

10. INSTALL LOWER BEARING (12) ON SHAFT LINK (5). SECURE WITH PIN (16), TWO WASHERS (17), AND NEW COTTER PIN (18).

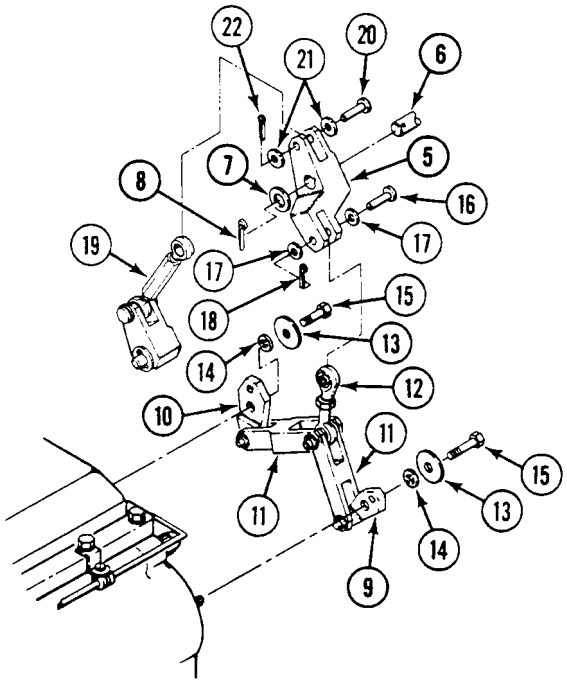

11. INSTALL LINK (19) ON LINK (5). SECURE WITH PIN (20), TWO WASHERS (21), AND NEW COTTER PIN (22).

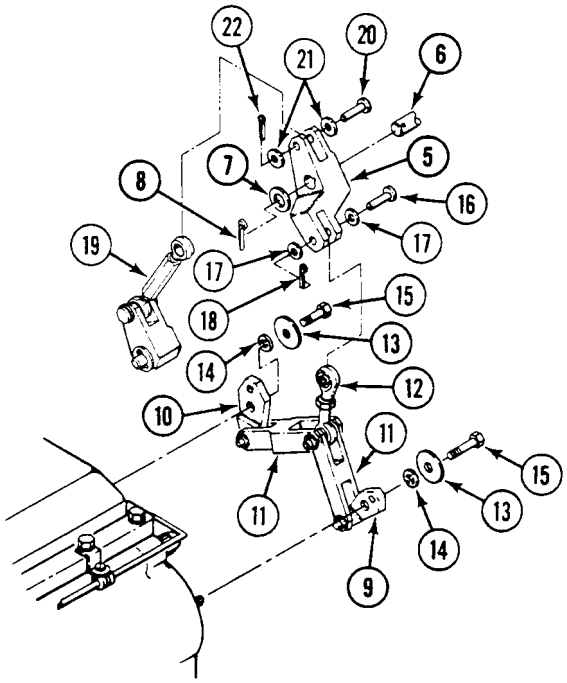

12. INSTALL LINK (23) ON LINK (24) AND PIVOT SHAFT ARM (25). SECURE WITH TWO SCREWS (26), WASHERS (27), AND NEW LOCKNUTS (28).

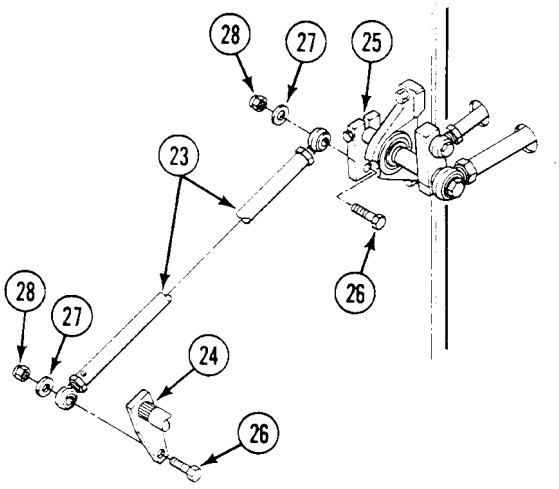

13. INSTALL TOW START CABLE (1) AND CLAMP (2) ON BRACKET (3). SECURE WITH LOCKNUT (4), SCREW (5), AND WASHER (6). INSTALL CONTROL ARM PIN (7) AND WASHER (8) IN BRACKET (9). INSTALL TOW START CABLE IN PIN. SECURE WITH COLLAR (10). SECURE PIN TO BRACKET WITH WASHER (11) AND NEW COTTER PIN (12). TIGHTEN SET SCREW (13).

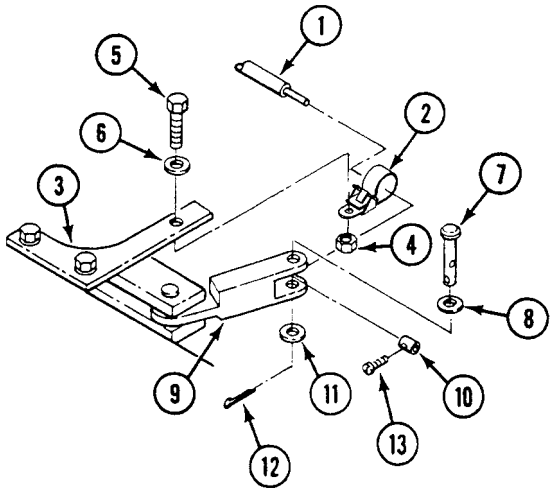

14. INSTALL THROTTLE LINK (14) ON THROTTLE ARM (15). SECURE WITH BOLT (16), WASHER (17), AND NEW LOCKNUT (18).

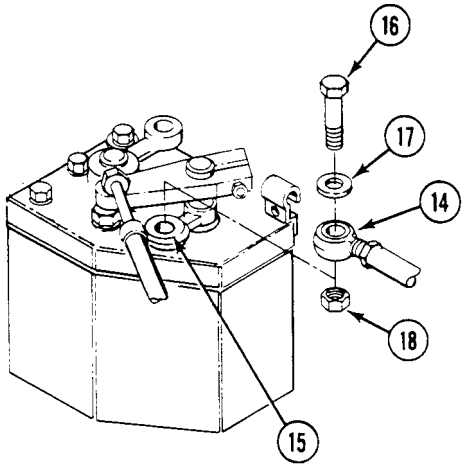

15. INSTALL STRAIGHT PIN (19) WITH SHUTOFF CABLE (20) ON GOVERNOR ARM (21). SECURE WITH WASHER (22) AND NEW COTTER PIN (23).

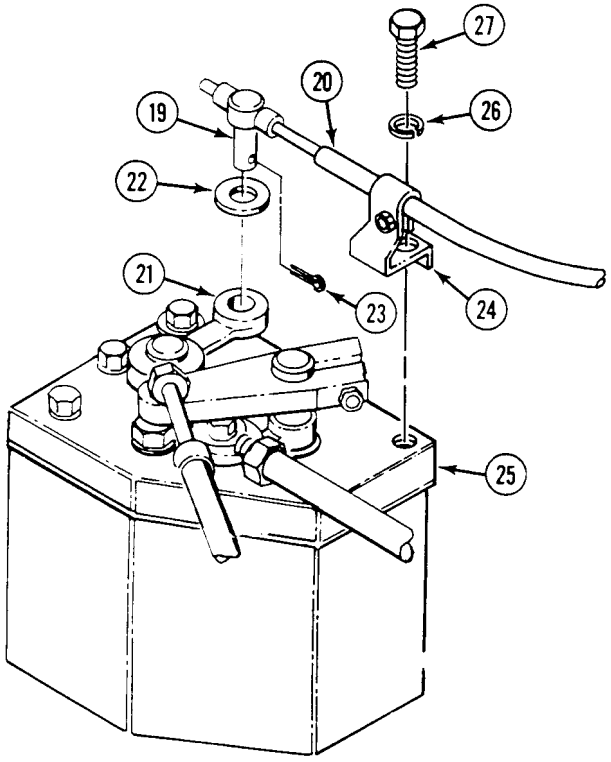

16. INSTALL CLAMP (24) WITH SHUTOFF CABLE (20) ON GOVERNOR HOUSING (25). SECURE WITH WASHER (26) AND SCREW (27).

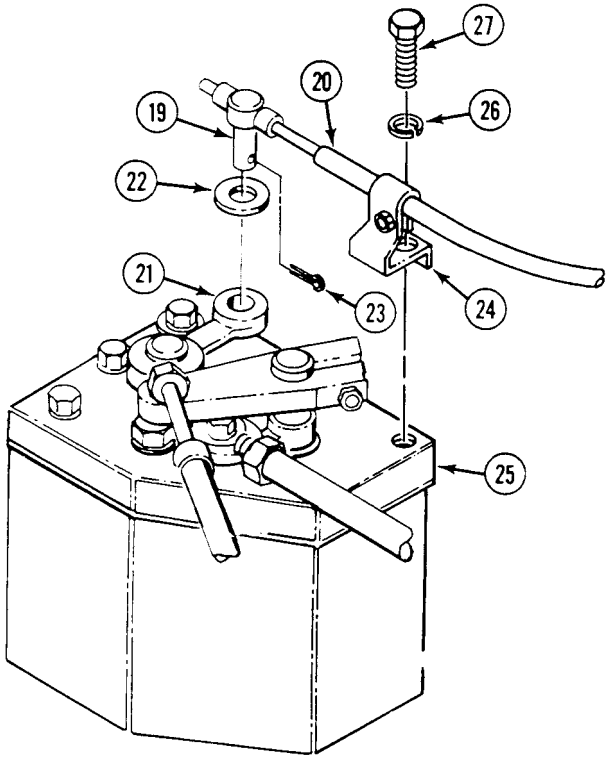

17. INSTALL FIVE ELECTRICAL CABLES (1) ON DRIVER'S COMPARTMENT BULKHEAD.

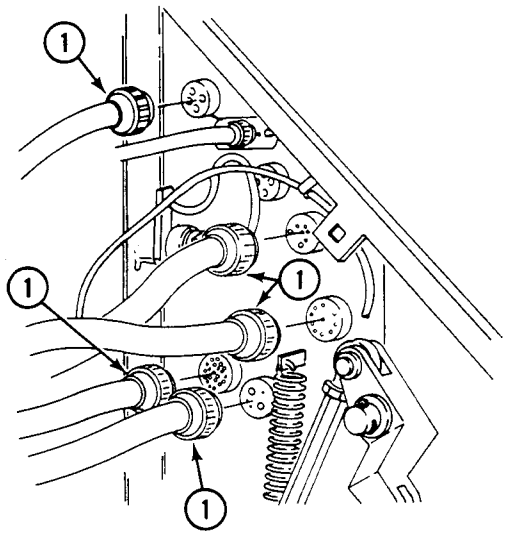

18. INSTALL TWO GROUND LEADS (2) AND (3) ON HULL GROUND LUG (4). SECURE WITH BOLT (5), TWO WASHERS (6), NEW SPRING WASHER (7), AND NEW LOCKNUT (8).

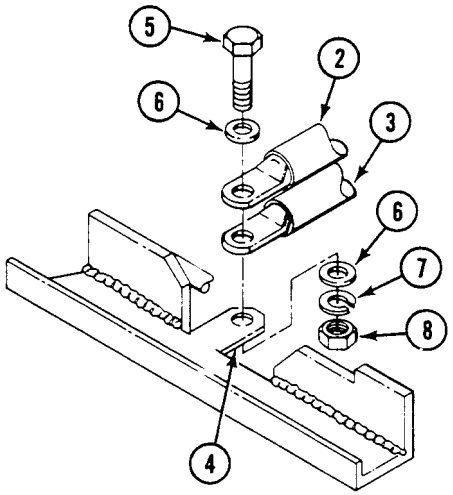

19. IF ENGINE COOLANT HEATER KIT IS INSTALLED, INSTALL HOSE (9) ON COOLANT PUMP SHUTOFF VALVE (10). SECURE WITH CLAMP (11).

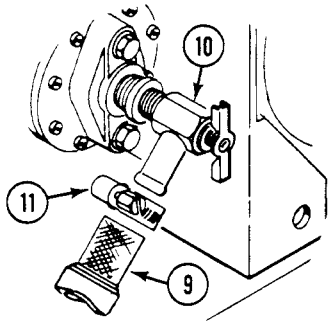

20. IF ENGINE COOLANT HEATER KIT IS INSTALLED, INSTALL HOSE (12) ON ENGINE COOLANT ELBOW (13) LOCATED ON BOTTOM LEFT SIDE OF ENGINE MANIFOLD. SECURE WITH CLAMP (14).

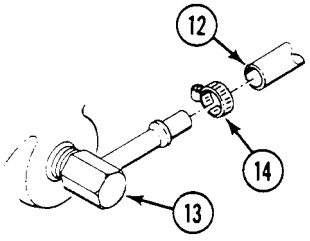

21. INSTALL TWO FUEL SUPPLY AND RETURN HOSES (5) AND (6) ON QUICK DISCONNECTS (7) AND (8).

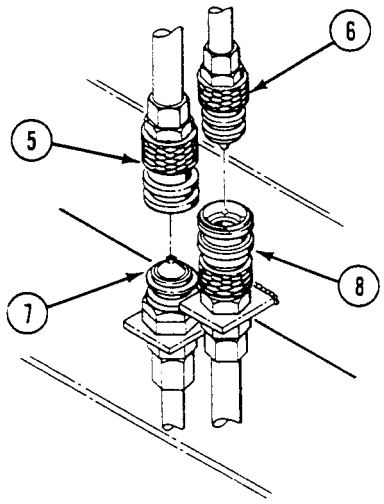

22. INSTALL AIR INTAKE ELBOW (9) ON TURBOCHARGER INLET (10) AND AIR CLEANER (11). SECURE WITH TWO CLAMPS (12).

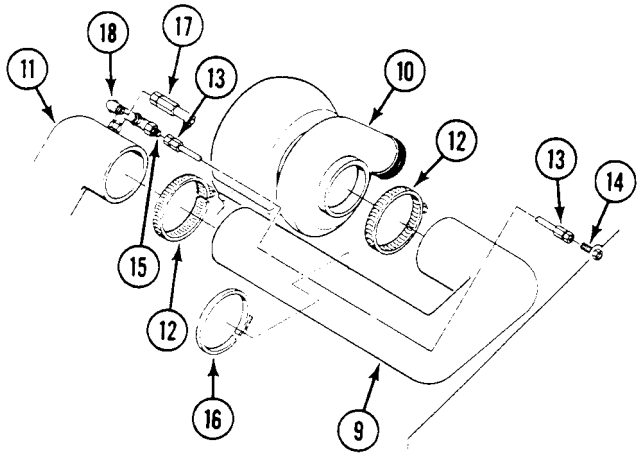

23. INSTALL AIR RESTRICTION INDICATOR HOSE (13) ON BULKHEAD ADAPTER (14) AND REDUCER (15).

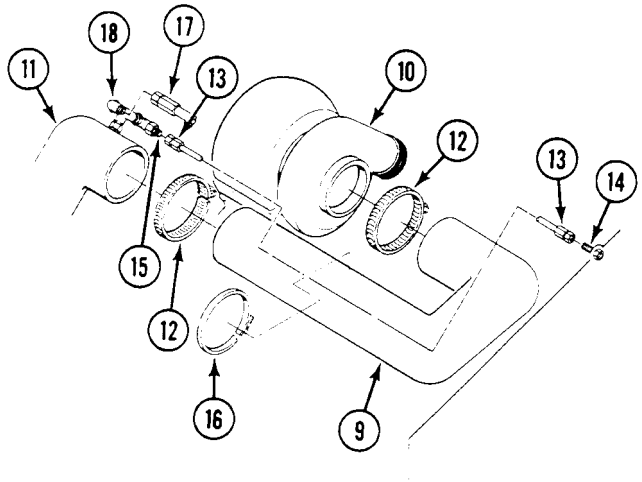

24. INSTALL NEW STRAP (16) ON HOSE (13) AND AIR INTAKE ELBOW (9).

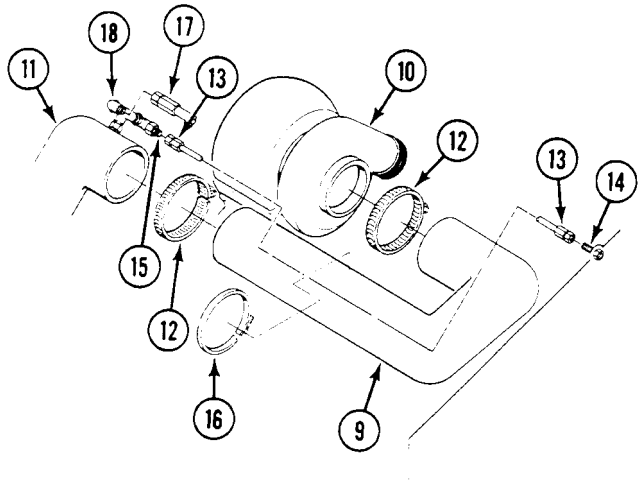

25. INSTALL AIR SUPPLY HOSE (17) ON ELBOW (18) ON AIR CLEANER (11).

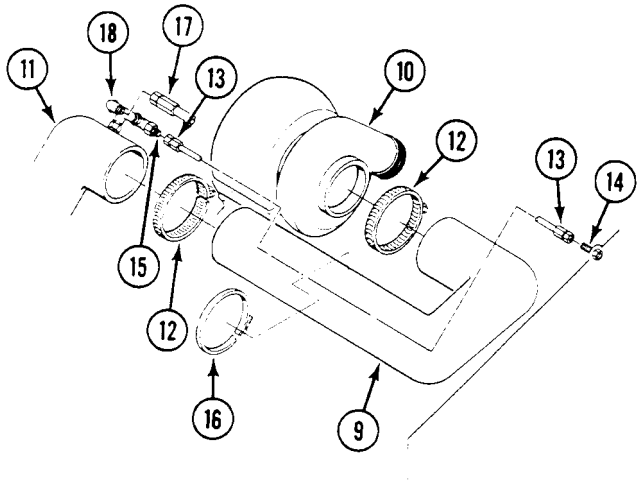

26. TRAVERSE TURRET TO 6400 MILS. See TM 9-2350-366-10-2.
27. LOWER POWER PLANT GRILL (WP 0335 00).
28. FILL COOLING SYSTEM (WP 0155 00).
29. CONNECT BATTERY GROUND STRAP (WP 0237 00).
30. INSTALL PROPELLER SHAFTS AND U-JOINTS (WP 0276 00).
31. PERFORM BRAKE ADJUSTMENT CHECK (WP 0280 00).
32. START ENGINE. See TM 9-2350-366-10-1. CHECK FOR LEAKS.
33. STOP ENGINE. TURN MASTER SWITCH OFF. See TM 9-2350-366-10-1.
34. INSTALL POWER PLANT REAR ACCESS PANEL (WP 0309 00).
35. INSTALL DRIVER’S POWER PLANT ACCESS PANEL (WP 0312 00).

END OF TASK

BLOCK POWER PLANT 0107 00

THIS WORK PACKAGE COVERS:

Jacking page 0107 00-1.

INITIAL SETUP:

Maintenance Level

Unit

Tools and Special Tools

General Mechanic's Tool Kit (WP 0397 00, Item 64)
Power plant sling (WP 0397 00, Item 48)

Materials/Parts

Lumber, 4 x 6 x 40 inch (10 x 15 x 102 cm)
Lumber, 4 x 6 x 20 inch (10 x 15 x 51 cm) (2)

Personnel Required

Unit Mechanic 63T10
Helper (H)

References

TM 9-2350-366-10-1

Equipment Condition

Engine stopped (TM 9-2350-366-10-1)
Vehicle blocked (TM 9-2350-366-10-1)
Power plant removed (WP 0106 00)

JACKING

WARNING

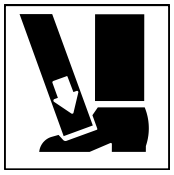

Blocking power plant on unlevel, soft ground can cause power plant to sink and tip over. Personnel can be injured and power plant can be damaged. Make sure to block power plant on flat, hard ground.

1. USE A LIFTING DEVICE OF AT LEAST 3,000 POUNDS (1,362 KG) CAPACITY AND SLING TO LIFT POWER PLANT.

2. ON LEVEL GROUND, PLACE A 4 X 6 X 40 INCH (10 X 15 X 102 CM) BLOCK (1) UNDER MOTOR MOUNTS OF THE ENGINE (2).

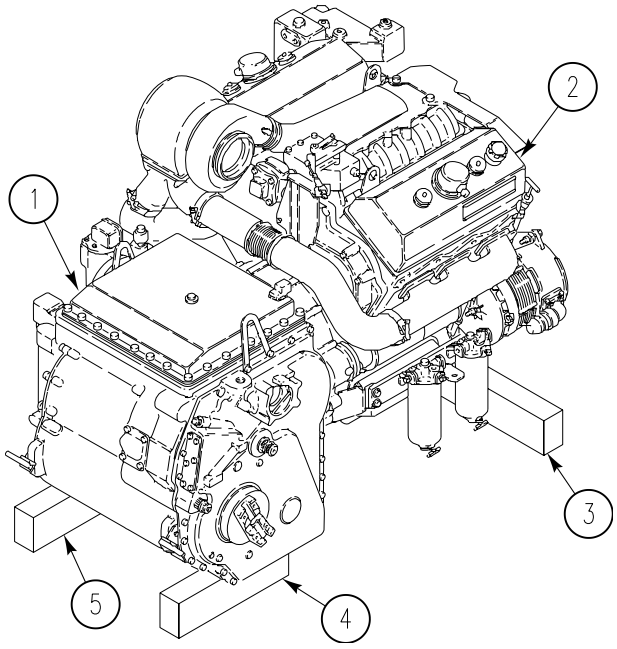

3. ON LEVEL GROUND, PLACE TWO 4 X 6 X 20 INCH (10 X 15 X 52 CM) BLOCKS (3 AND 4) UNDER TRANSMISSION (5).
4. LOWER POWER PLANT DOWN SLOWLY ON BLOCKS. HAVE HELPER ASSIST.
5. CHECK THAT POWER PLANT IS FIRMLY SUPPORTED BY BLOCKS.

END OF TASK

REPLACE ENGINE MOUNTS 0108 00

THIS WORK PACKAGE COVERS:

Removal (page 0108 00-1).
Installation (page 0108 00-2).

INITIAL SETUP:

Maintenance Level
Unit

Tools and Special Tools
General Mechanic's Tool Kit (WP 0397 00, Item 64)
Torque Wrench, 1/2 inch drive, 0–170 ft-lb (WP 0397 00, Item 83)

Materials/Parts
Locknut

Personnel Required
Unit Mechanic 63T10

References
TM 9-2350-366-10-1

Equipment Condition
Engine stopped (TM 9-2350-366-10-1)
Vehicle blocked (TM 9-2350-366-10-1)
Front VISMOD access doors removed (WP 0313 00)
Battery ground strap disconnected (WP 0237 00)
Power plant removed (WP 0106 00)

REMOVAL

NOTE

Right and left engine mounts are replaced the same way.

1. REMOVE SCREW (1), TWO WASHERS (2), TWO WASHERS (3), TWO MOUNTS (4), BLOCK (5), AND LOCKNUT (6) FROM ENGINE. DISCARD LOCKNUT.

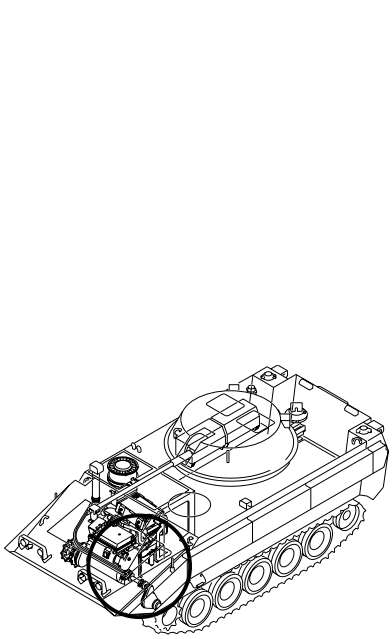

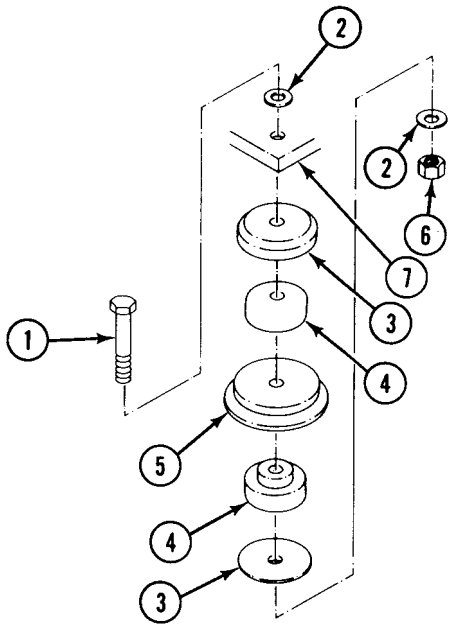

INSTALLATION

1. INSTALL SCREW (1) AND WASHER (2) IN ENGINE MOUNT BASE (7).

NOTE

Do not torque nuts until engine mounts are properly aligned on hull mounts.

2. LIGHTLY LUBRICATE TWO MOUNTS (4) WITH WATER. INSTALL WASHER (3), MOUNT (4), BLOCK (5), MOUNT (4), TWO WASHERS (2), WASHER (3), AND NEW LOCKNUT (6) ON ENGINE. TIGHTEN LOCKNUT TO 100-120 FT-LB (136-163 N·m) TORQUE.

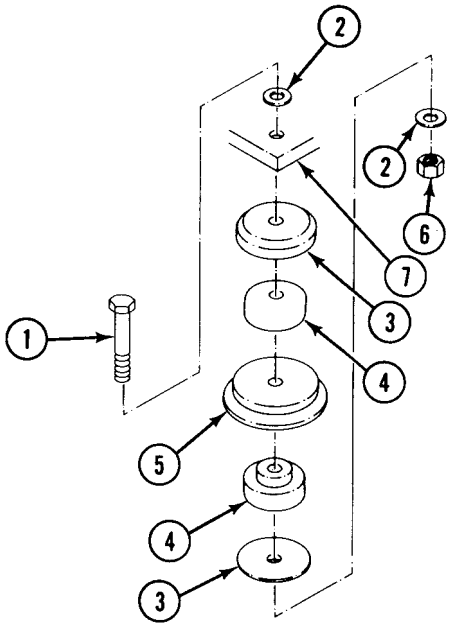

3. INSTALL POWER PLANT (WP 0106 00).
4. CONNECT BATTERY GROUND STRAP (WP 0237 00).
5. INSTALL HULL NOSE ASSEMBLY (WP 0313 00).

END OF TASK

REPLACE LEFT AIR BOX DRAIN CHECK VALVE AND TUBES 0109 00

THIS WORK PACKAGE COVERS:

Removal (page 0109 00-1).
Installation (page 0109 00-2).

INITIAL SETUP:

Maintenance Level

Unit

References

TM 9-2350-366-10-1

Tools and Special Tools

General Mechanic's Tool Kit (WP 0397 00, Item 64)

Equipment Condition

Engine stopped (TM 9-2350-366-10-1)
Vehicle blocked (TM 9-2350-366-10-1)
Power plant removed (WP 0106 00).

Materials/Parts

Adhesive (WP 0399 00, Item 4)
Locknut (2)

Personnel Required

Unit Mechanic 63T10

REMOVAL

1. REMOVE TWO SCREWS (11), FOUR WASHERS (12), TWO LOCKNUTS (13), AND BRACKET (10) FROM ENGINE. DISCARD LOCKNUTS.

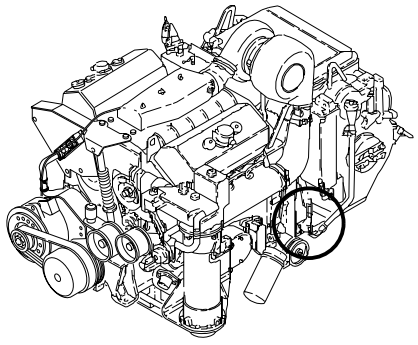

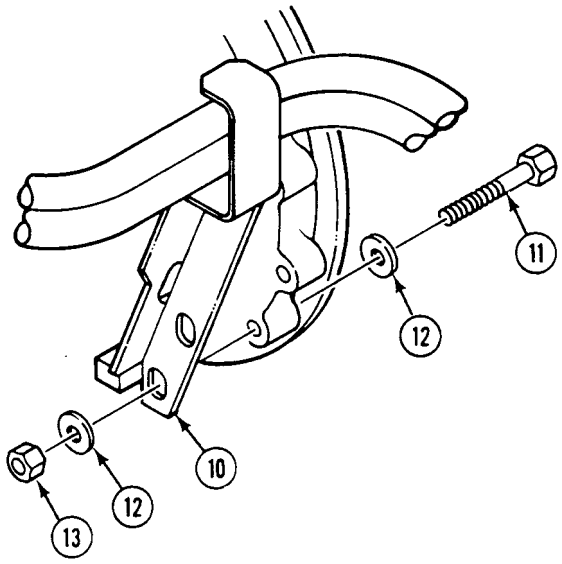

2. LOOSEN NUT (5). REMOVE CHECK VALVE (6) FROM ADAPTER (7).
3. REMOVE SCREW (8), TWO WASHERS (9) AND TUBE (10) FROM ENGINE.
4. REMOVE ADAPTER (7) FROM TUBE (11).
5. REMOVE TUBE (11) FROM ADAPTER (12).
6. REMOVE ADAPTER (12) AND ELBOW (13) FROM ENGINE.

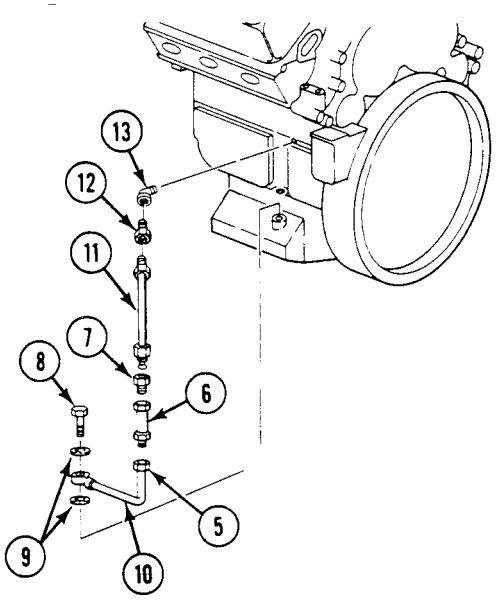

INSTALLATION

1. APPLY A THIN COAT OF ADHESIVE TO EXTERNAL THREADS OF FITTINGS.
2. INSTALL ELBOW (13) AND ADAPTER (7) ON ENGINE.
3. INSTALL TUBE (11) ON ADAPTER (7).
4. INSTALL ADAPTER (12) ON TUBE (11).
5. INSTALL TUBE (11), TWO WASHERS (9) AND SCREW (8) ON ENGINE. DO NOT TIGHTEN SCREW.
6. INSTALL CHECK VALVE (6) ON ADAPTER (7).
7. CONNECT TUBE (10) TO CHECK VALVE (6). TIGHTEN NUT (5) AND SCREW (8).

8. INSTALL BRACKET (10) ON ENGINE WITH TWO SCREWS (11), FOUR WASHERS (12) AND TWO NEW LOCKNUTS (13).

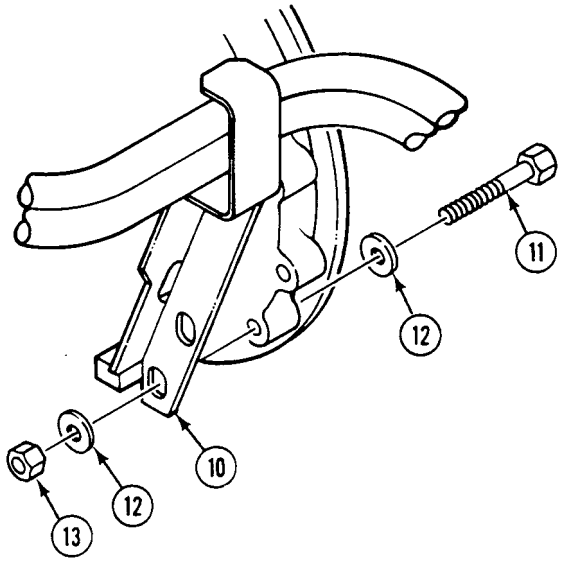

9. INSTALL POWER PLANT (WP 0106 00).

END OF TASK

REPLACE RIGHT AIR BOX DRAIN CHECK VALVE AND TUBES 0110 00

THIS WORK PACKAGE COVERS:

Removal (page 0110 00-1).
Installation (page 0110 00-2).

INITIAL SETUP:

Maintenance Level
Unit

Tools and Special Tools
General mechanic's tool kit (WP 0397 00, Item 64)

Materials/Parts
Adhesive (WP 0399 00, Item 4)
Lockwasher (2)

Personnel Required
Unit mechanic 63T10

References
TM 9-2350-366-10-1

Equipment Condition
Engine stopped (TM 9-2350-366-10-1)
Vehicle blocked (TM 9-2350-366-10-1)
Driver's power plant access panel removed (TM 9-2350-366-10-1)
Starter removed (WP 0115 00)

REMOVAL

1. LOOSEN NUT (1). REMOVE CHECK VALVE (2) FROM ELBOW (3).
2. REMOVE SCREW (4), LOCKWASHER (5), AND WASHER (6) FROM CLAMP (7). DISCARD LOCKWASHER.
3. REMOVE SCREW (8), TWO WASHERS (9), TUBE (10), AND CLAMP (7) FROM ENGINE.
4. REMOVE ELBOW (3) FROM TUBE (11).
5. REMOVE SCREW (12) AND LOCKWASHER (13) FROM CLAMP (14). DISCARD LOCKWASHER.
6. REMOVE TUBE (11) AND CLAMP (14) FROM ELBOW (15).
7. REMOVE ELBOW (15) FROM ENGINE.

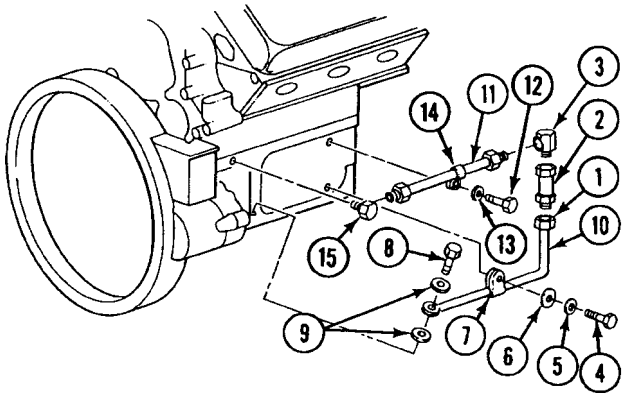

INSTALLATION

WARNING

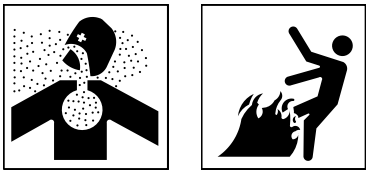

Adhesive, primer, sealant compounds, and isopropyl alcohol are toxic and flammable. These compounds are toxic to eyes, skin, and respiratory tract. Continued exposure can make you dizzy and irritate your eyes and throat.

Always use in well ventilated areas, away from heat, sparks, and flames. Do not breathe fumes. Do not allow into contact with skin and eyes. Use goggles or face shield and protective gloves.

1. APPLY A THIN COAT OF ADHESIVE TO EXTERNAL THREADS OF FITTINGS.
2. INSTALL ELBOW (15) ON ENGINE.
3. INSTALL ELBOW (3) ON TUBE (11). INSTALL TUBE ON ELBOW (15).
4. INSTALL NEW LOCKWASHER (13) AND SCREW (12) ON CLAMP (14).
5. INSTALL TUBE (10), CLAMP (7), SCREW (8), AND TWO WASHERS (9) ON ENGINE. DO NOT TIGHTEN SCREW.
6. INSTALL CHECK VALVE (2) ON ELBOW (3). TIGHTEN NUT (1) ON CHECK VALVE.
7. INSTALL SCREW (4), NEW LOCKWASHER (5), AND WASHER (6) ON CLAMP (7) AND ENGINE.
8. TIGHTEN SCREW (8).

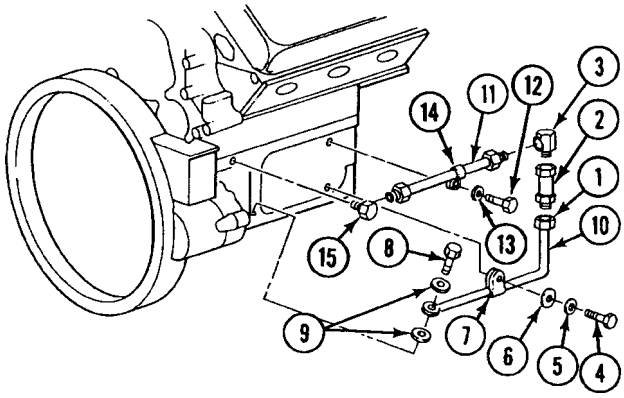

9. INSTALL STARTER (WP 0115 00).
10. INSTALL DRIVER'S POWER PLANT ACCESS PANEL. See TM 9-2350-366-10-1.

END OF TASK

REPLACE ENGINE LIFTING BRACKET 0111 00

THIS WORK PACKAGE COVERS:

Removal (page 0111 00-1).
Installation (page 0111 00-2).

INITIAL SETUP:

Maintenance Level

Unit

Tools and Special Tools

General Mechanic's Tool Kit (WP 0397 00, Item 64)

Materials/Parts

Lockwasher (2)

Personnel Required

Unit Mechanic 63T10

References

TM 9-2350-366-10-1

Equipment Condition

Engine stopped (TM 9-2350-366-10-1)
Vehicle blocked (TM 9-2350-366-10-1)
Front VISMOD access doors removed (WP 0307 00)
Hull nose assembly removed (WP 0313 00)
Engine access cover plate removed (WP 0308 00)
Power plant grill removed (WP 0335 00)

REMOVAL

NOTE

Both brackets are removed and installed the same way.

1. REMOVE TWO SCREWS (3), LOCKWASHERS (2), AND LIFTING BRACKET (1) FROM POWER PLANT. DISCARD LOCKWASHERS.

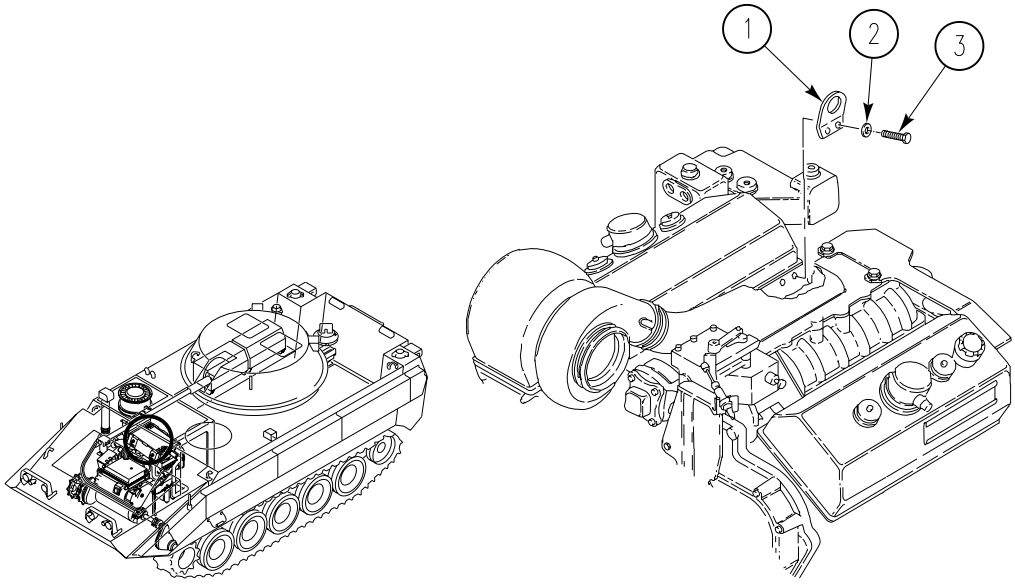

INSTALLATION

1. INSTALL BRACKET (1) WITH TWO SCREWS (3) AND NEW LOCKWASHERS (2) ON POWER PLANT.

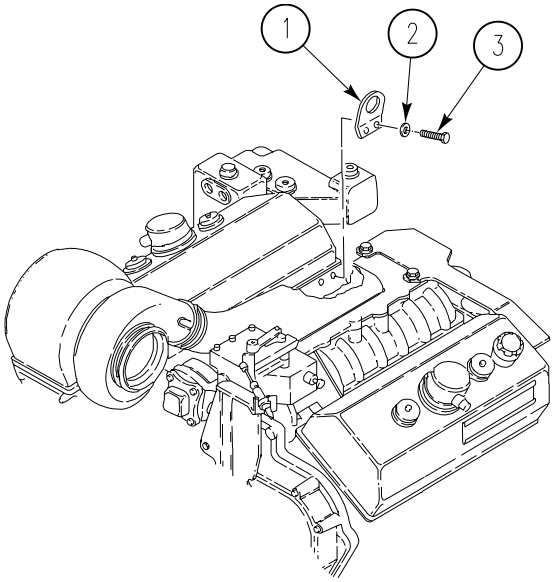

END OF TASK

REPLACE ENGINE OIL FILLER CAP 0112 00

THIS WORK PACKAGE COVERS:

Removal (page 0112 00-1).
Installation (page 0112 00-2).

INITIAL SETUP:

Maintenance Level
Unit

Tools and Special Tools
General Mechanic's Tool Kit (WP 0397 00, Item 64)

Materials/Parts
Filler cap
Hook (2)

Personnel Required
Unit Mechanic 63T10

References
TM 9-2350-366-10-1

Equipment Condition
Engine stopped TM 9-2350-366-10-1
Vehicle blocked TM 9-2350-366-10-1
Driver's power plant access panel removed (WP 0312 00)
Power plant rear access panels removed (WP 0309 00)

REMOVAL

1. UNSCREW T-HANDLE (1) ON OIL FILLER CAP (2) AND REMOVE CAP FROM FILLER HOLE (3).

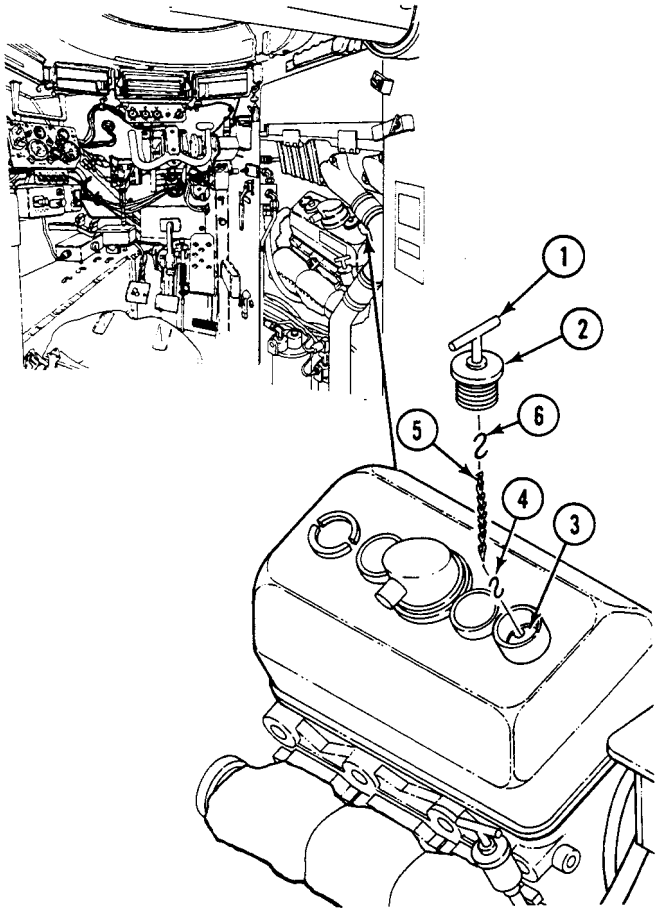

2. OPEN HOOK (4) IN FILLER HOLE (3) TO REMOVE CAP (2) AND CHAIN (5). DISCARD HOOK.
3. OPEN HOOK (6) ON FILLER CAP (2) TO REMOVE HOOK AND CHAIN (5) FROM CAP. DISCARD HOOK AND CAP.

INSTALLATION

1. SECURE CHAIN (5) TO NEW FILLER CAP (2) WITH NEW HOOK (6).
2. SECURE OTHER END OF CHAIN (5) TO FILLER HOLE (3) WITH NEW HOOK (4).
3. INSTALL CAP (2) IN FILLER HOLE (3) AND SECURE BY TURNING T-HANDLE (1) CLOCKWISE.

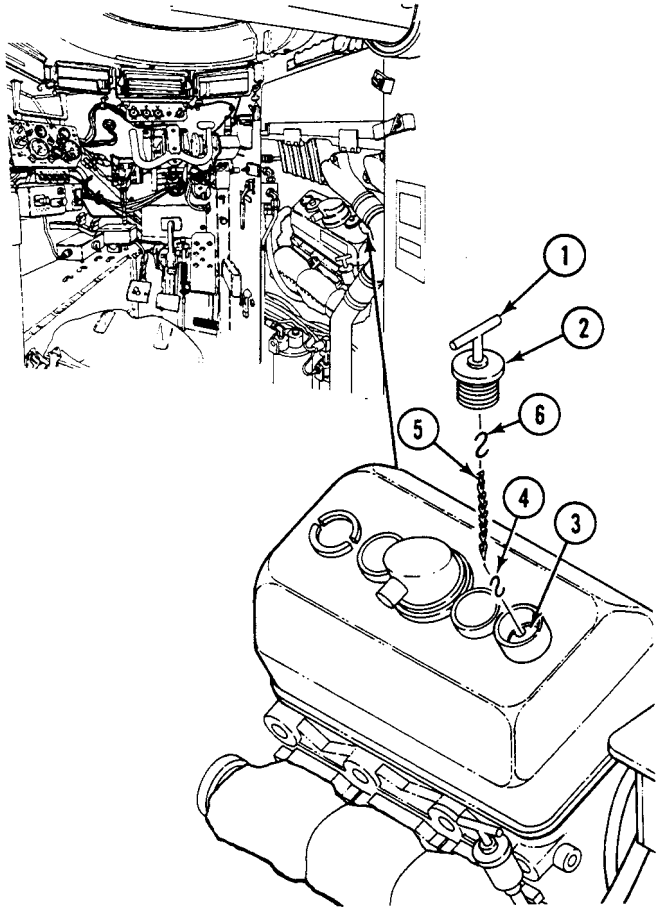

END OF TASK

REPLACE ENGINE OIL SAMPLING VALVE AND HOSE 0113 00

THIS WORK PACKAGE COVERS:

Removal (page 0113 00-1).
Installation (page 0113 00-2).

INITIAL SETUP:

Maintenance Level
Unit

Tools and Special Tools
General Mechanic's Tool Kit (WP 0397 00, Item 64)

Materials/Parts
Sealing compound (WP 0399 00, Item 55)

Personnel Required
Unit Mechanic 63T10

References
TM 9-2350-366-10-1

Equipment Condition
Engine stopped TM 9-2350-366-10-1
Vehicle blocked TM 9-2350-366-10-1
Driver's power plant access panel removed (WP 0312 00)
Power plant rear access panels removed (WP 0309 00)

REMOVAL

1. REMOVE HOSE (1) FROM ADAPTER (2).

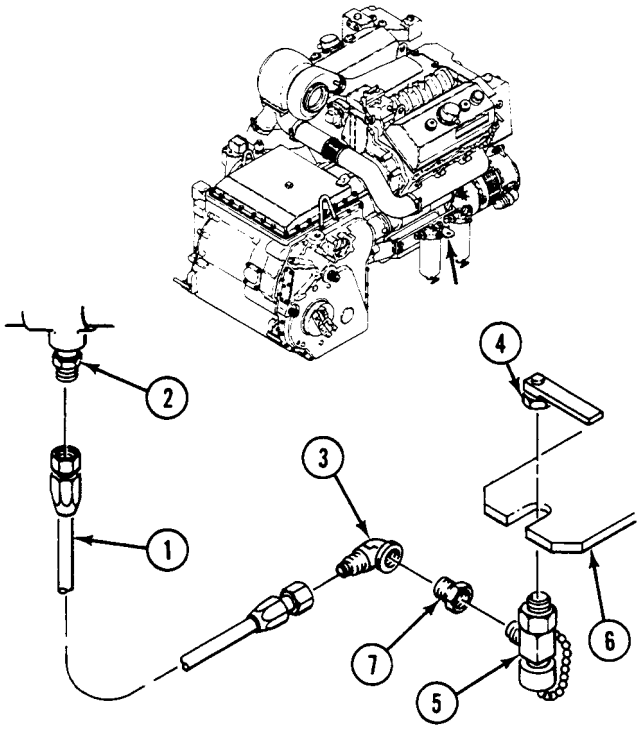

2. REMOVE HOSE (1) FROM ELBOW (3).
3. LOOSEN JAM NUT (4) ON VALVE (5) AND SLIDE VALVE OUT OF BRACKET (6).
4. REMOVE ELBOW (3) FROM BUSHING (7).

5. REMOVE BUSHING (7) FROM VALVE (5).

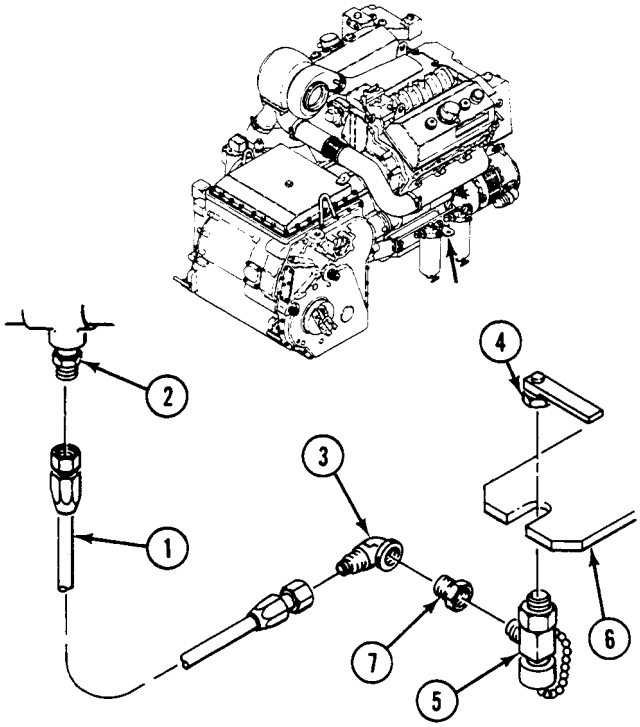

INSTALLATION

1. APPLY SEALING COMPOUND TO ALL MALE TAPERED THREADS. DO NOT APPLY SEALING COMPOUND BEYOND SMALL END OF TAPERED THREADS.

2. INSTALL BUSHING (7) IN VALVE (5).

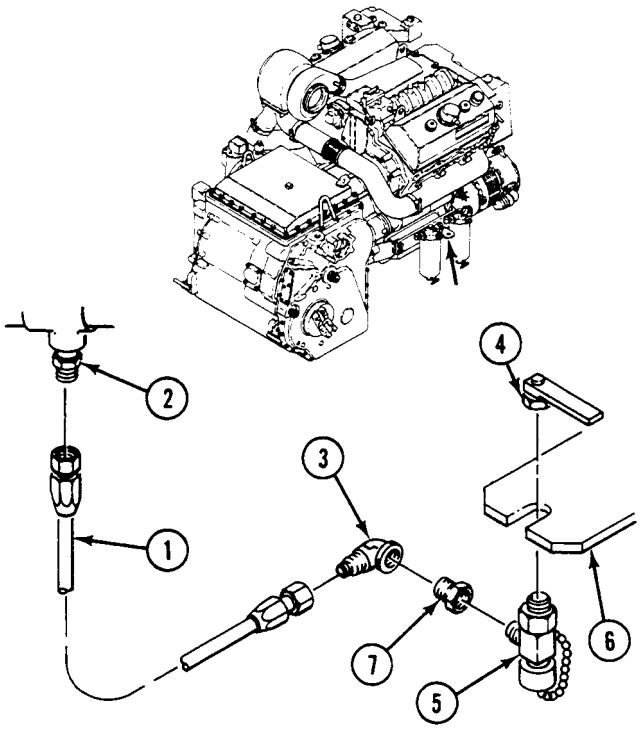

3. INSTALL ELBOW (3) IN BUSHING (7).
4. INSTALL VALVE (5) ON BRACKET (6) AND SECURE WITH JAM NUT (4).
5. INSTALL HOSE (1) ON ELBOW (3).

6. ROUTE HOSE BEHIND FUEL FILTER AND CONNECT HOSE (1) TO ADAPTER (2).

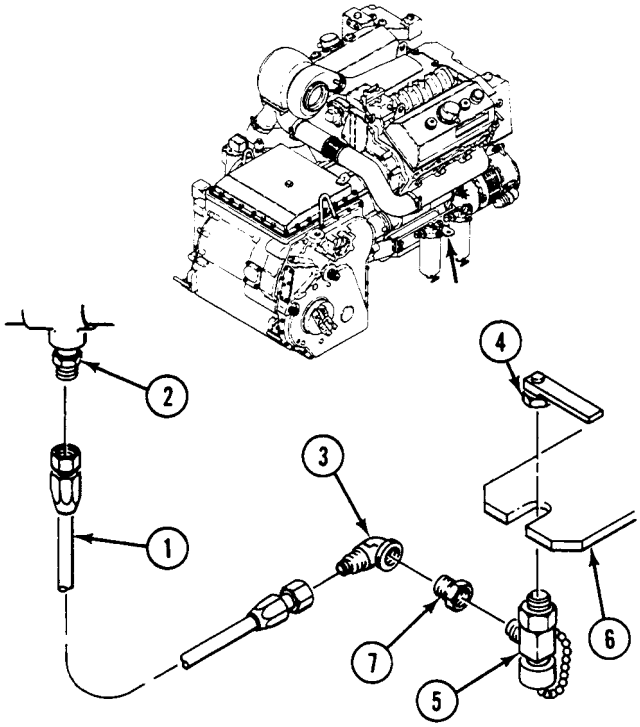

7. START ENGINE. See TM 9-2350-366-10-1.
8. CHECK FOR LEAKS.
9. STOP ENGINE. See TM 9-2350-366-10-1.
10. INSTALL DRIVER'S POWER PLANT ACCESS PANEL (WP 0312 00).

END OF TASK

REPLACE OIL GAUGE ROD AND TUBE 0114 00

THIS WORK PACKAGE COVERS:

Removal (page 0114 00-1).
Installation (page 0114 00-3).

INITIAL SETUP:

Maintenance Level
Unit

Tools and Special Tools
General Mechanic's Tool Kit (WP 0397 00, Item 64)

Materials/Parts
Adhesive (WP 0399 00, Item 4)
Locknut

Personnel Required
Unit Mechanic 63T10

References
TM 9-2350-366-10-1

Equipment Condition
Engine stopped (TM 9-2350-366-10-1)
Vehicle blocked (TM 9-2350-366-10-1)
Driver's power plant access panel removed (WP 0312 00)
Power plant rear access panels removed (WP 0309 00)

REMOVAL

1. LOOSEN OIL GAUGE ROD T HANDLE (1). REMOVE OIL GAUGE ROD (2) FROM TUBE (3).

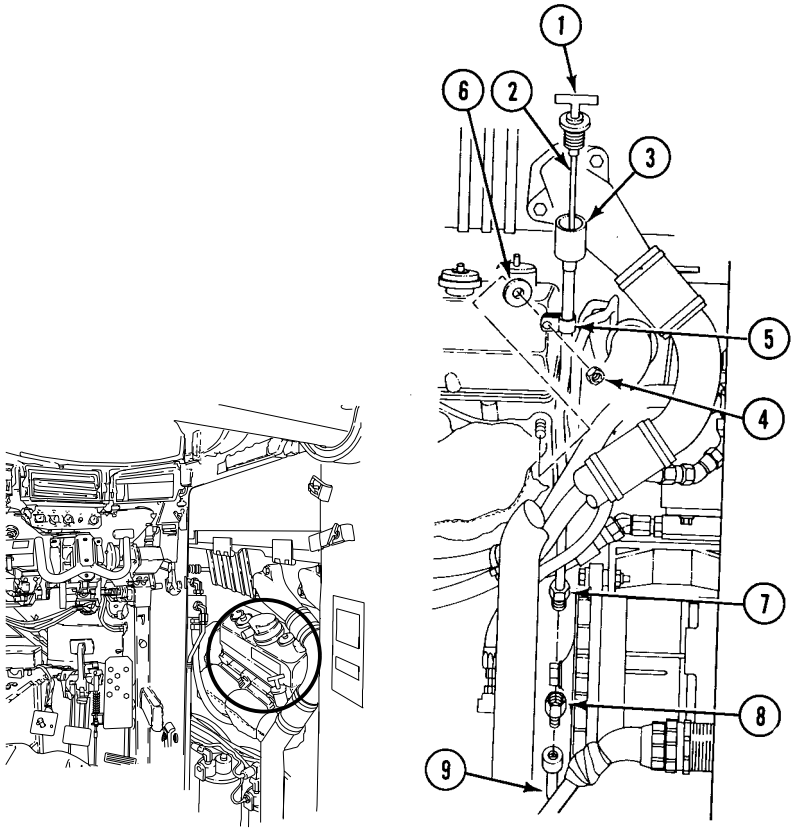

2. REMOVE LOCKNUT (4), CLAMP (5), AND WASHER (6) FROM ENGINE. DISCARD LOCKNUT.

3. LOOSEN NUT (7). REMOVE TUBE (3) AND CLAMP (5) FROM OIL PAN ADAPTER (8).

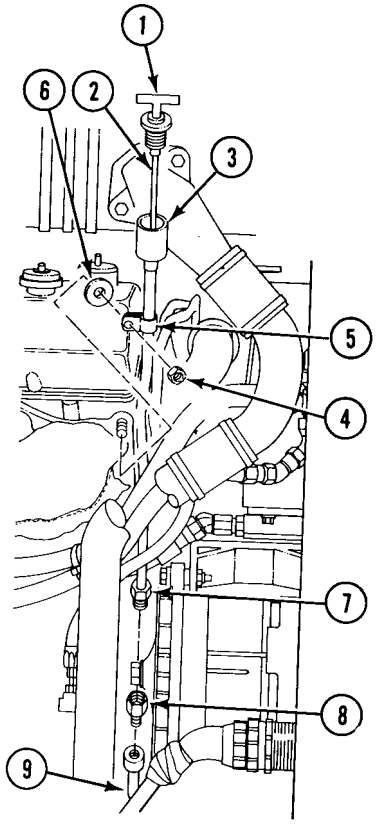

4. REMOVE ADAPTER (8) FROM OIL PAN (9).

INSTALLATION

1. APPLY A THIN COAT OF ADHESIVE TO EXTERNAL THREADS OF NUT (7) AND ADAPTER (8).
2. INSTALL ADAPTER (8) ON OIL PAN (9).
3. INSTALL TUBE (3) AND CLAMP (5) ON OIL PAN ADAPTER (8). TIGHTEN NUT (7).
4. INSTALL WASHER (6), CLAMP (5) AND TUBE (3) ON ENGINE. SECURE WITH NEW LOCKNUT (4).
5. INSTALL OIL GAUGE ROD (2) IN TUBE (3). TIGHTEN OIL GAUGE ROD T HANDLE (1).
6. INSTALL DRIVER'S COMPARTMENT ACCESS PANEL (WP 0312 00).

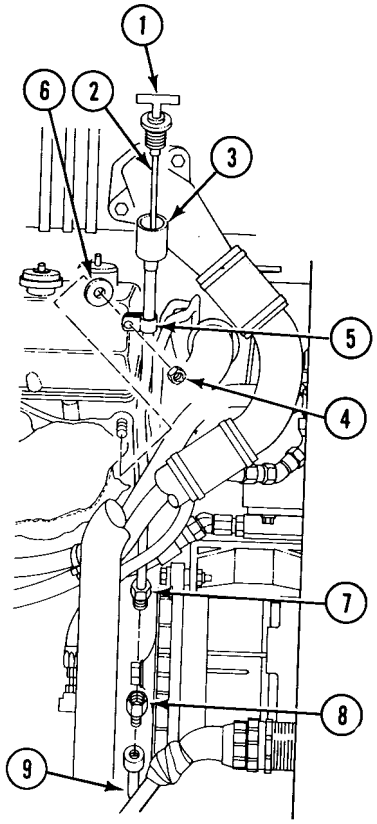

END OF TASK

REPLACE STARTER 0115 00

THIS WORK PACKAGE COVERS:

Removal (page 0115 00-1)
Installation (page 0115 00-3)

INITIAL SETUP:

Maintenance Level
Unit

Tools and Special Tools
General mechanic's tool kit (WP 0397 00, Item 64)
Torque wrench, 1/2 inch drive, 0-175 ft-lb (WP 0397 00, Item 83)

Materials/Parts
Insulating compound (WP 0399 00, Item 36)
Gasket
Lockwasher (3)

Personnel Required
Unit Mechanic 63T10
Helper (H)

References
TM 9-2350-366-10-1

Equipment Condition
Engine stopped (TM 9-2350-366-10-1)
Vehicle blocked (TM 9-2350-366-10-1)
Battery ground strap disconnected (WP 0237 00)
Radiator drained (WP 0155 00)
Driver's seat removed (WP 0359 00)
Radiator outlet tube removed (WP 0161 00)
Fuel filters and bracket removed (WP 0378 00)

REMOVAL

1. REMOVE NUT (1), LOCKWASHER (2), CIRCUIT 6 (3) AND CIRCUIT 6A (4), AND 74C LEADS (5) FROM TERMINAL (6) OF STARTER SOLENOID (7).

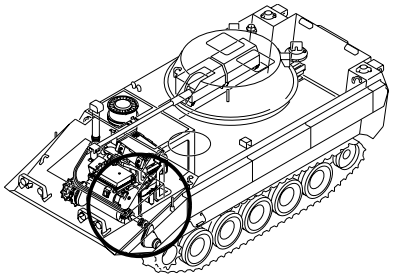

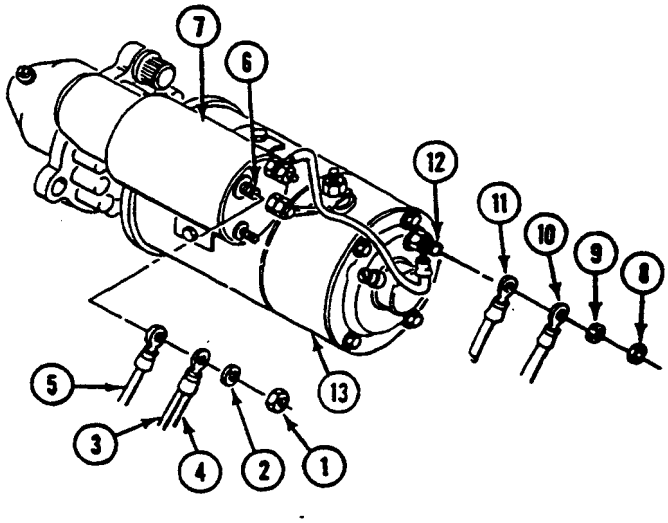

2. REMOVE NUT (8), LOCKWASHER (9), CIRCUIT 74A (10), AND GROUND LEAD (11) FROM LOWER TERMINAL (12) OF STARTER (13).

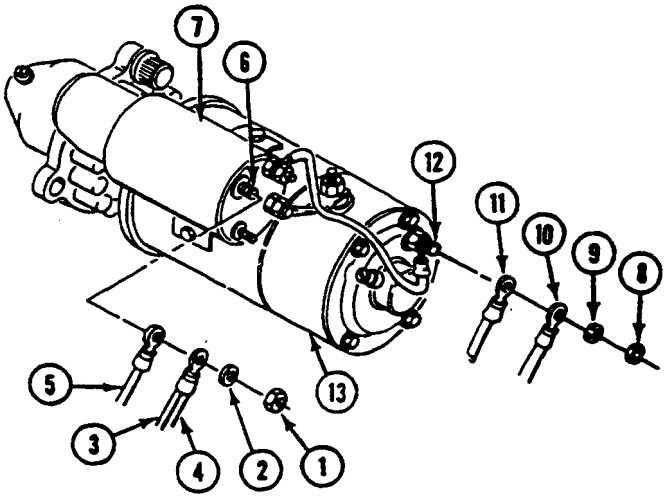

WARNING

Starter weighs 75 lbs (34 kg) and can cause back injury if handled improperly. Be sure to use a hoist or a helper to remove starter.

3. REMOVE THREE BOLTS (1), WASHERS (2), GASKET (3), AND STARTER (4) FROM ENGINE. DISCARD GASKET AND WASHERS.

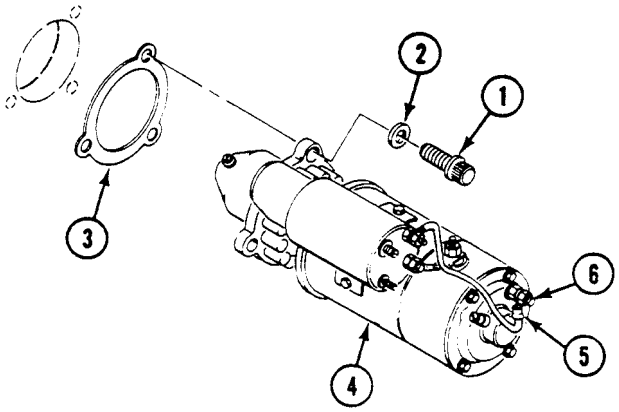

INSTALLATION

1. APPLY THIN COATING OF INSULATING COMPOUND TO ELECTRICAL CONNECTORS (5) AND TERMINALS (6) OF STARTER (4).
2. INSTALL NEW GASKET (3) AND STARTER (4) ON ENGINE. SECURE WITH THREE BOLTS (1) AND NEW WASHERS (2). TIGHTEN BOLTS TO 137-147 LB-FT (186-198 N•M) TORQUE. USE TORQUE WRENCH.

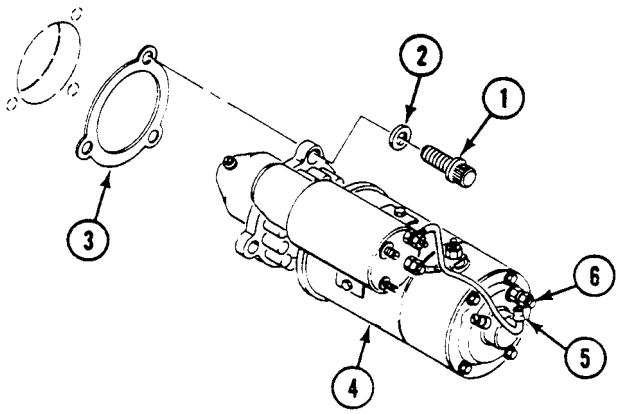

3. INSTALL CIRCUIT 74A (7) AND GROUND LEAD (8) ON LOWER TERMINAL (9) OF STARTER (4) WITH NUT (10) AND LOCKWASHER (11).

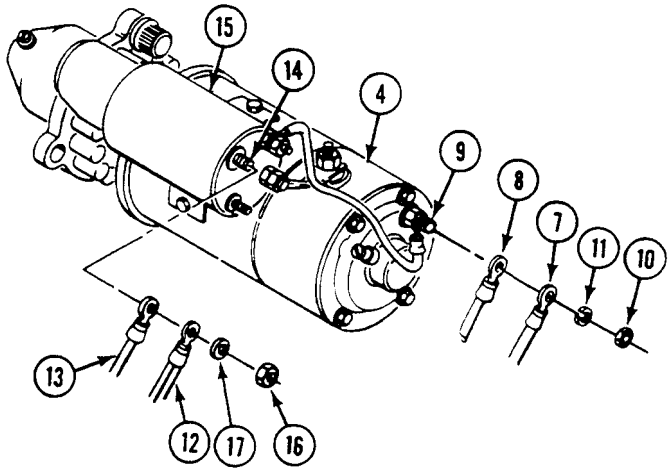

4. INSTALL CIRCUIT 6 AND 6A LEADS (12), AND 74C LEAD (13) ON TERMINAL (14) OF STARTER SOLENOID (15) WITH NUT (16) AND LOCKWASHER (17).

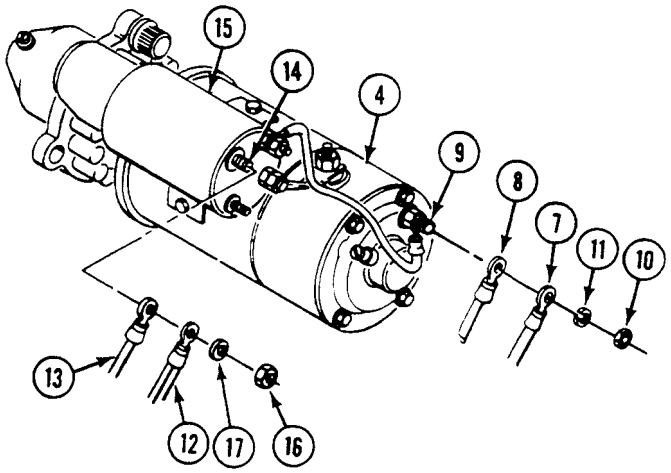

5. INSTALL FUEL FILTERS AND BRACKET (WP 0378 00).
6. INSTALL RADIATOR OUTLET TUBE (WP 0161 00).
7. INSTALL DRIVER'S SEAT (WP 0359 00).
8. FILL RADIATOR (WP 0155 00).
9. CONNECT BATTERY GROUND STRAP (WP 0237 00).

END OF TASK

CHAPTER 5

UNIT MAINTENANCE INSTRUCTIONS FOR FUEL SYSTEM

WORK PACKAGE INDEX

Title	Sequence No.
REPLACE ENGINE FUEL PUMP	0116 00
REPLACE FUEL SUPPLY PRESSURE TRANSDUCER	0117 00
REPLACE FUEL RETURN PRESSURE TRANSDUCER	0118 00
REPLACE TURBO OUTLET PRESSURE TRANSDUCER	0119 00
REPLACE AIR BOX PRESSURE TRANSDUCER	0120 00
REPLACE FUEL FILTER DIFFERENTIAL PRESSURE SWITCH	0121 00
REPLACE AUXILIARY TANK FLUID LEVEL DETECTOR	0122 00
DRAIN TANKS	0123 00
REPLACE FUEL QUANTITY TRANSMITTER	0124 00
REPLACE FUEL SELECT SWITCH TO GAUGE LEAD	0125 00
REPLACE GLOW PLUG HARNESS AND GLOW PLUGS	0126 00
REPLACE GLOW PLUG CONTROLLER	0127 00
REPLACE GLOW PLUG POWER HARNESS	0128 00
REPLACE GLOW PLUG CONTROLLER MOUNTING BRACKET	0129 00
REPLACE ENGINE FUEL SUPPLY HOSE	0130 00
REPLACE ENGINE FUEL RETURN HOSE	0131 00
REPLACE PRIMARY AND SECONDARY FUEL FILTERS AND BRACKET	0132 00
REPLACE PRIMARY AND SECONDARY FUEL FILTER ELEMENTS	0133 00
REPLACE FUEL SUPPLY PRESSURE TRANSDUCER	0134 00
REPLACE FUEL RETURN PRESSURE TRANSDUCER	0135 00
REPLACE FUEL FILTER DIFFERENTIAL PRESSURE SWITCH	0136 00
REPLACE GOVERNOR ASSEMBLY	0137 00

REPLACE ENGINE FUEL PUMP 0116 00

THIS WORK PACKAGE COVERS:

Removal (page 0116 00-2).
Cleaning (page 0116 00-4).
Inspection (page 0116 00-4).
Repair or Replacement (page 0116 00-5).
Installation (page 0116 00-5).

INITIAL SETUP:

Maintenance Level

Unit

Tools and Special Tools

General mechanic's tool kit (WP 0397 00, Item 64)

Materials/Parts

Adhesive (WP 0399 00, Item 4)
Cleaning compound (WP 0399 00, Item 17)
Gasket

Personnel Required

Unit Mechanic 63T10

References

TM 9-2350-366-10-1
TM 9-2350-366-10-2

Equipment Condition

Engine stopped (TM 9-2350-366-10-1)
Vehicle blocked (TM 9-2350-366-10-1)
Power plant upper rear access panel removed (WP 0309 00)
Front VISMOD access panels removed (WP 0307 00)
Engine access cover plate removed (WP 0308 00)
Battery ground strap disconnected (WP 0237 00)
Left exhaust elbow removed (WP 0153 00)
Turret rotated to access rear engine access cover (TM 9-2350-366-10-2)

WARNING

Unexpected and rapid turret movement can kill or seriously injure personnel.

Inform crew before moving turret, and move turret slowly during these procedures.

WARNING

Turret can rotate and severely injure or kill you. Do not reach through turret shield opening when turret power is on. Keep turret shield door closed whenever turret drive power is on. Engage turret travel lock before moving or reaching through turret shield opening.

REMOVAL

1. REMOVE FUEL SUPPLY HOSE (1) AT QUICK DISCONNECT (2).

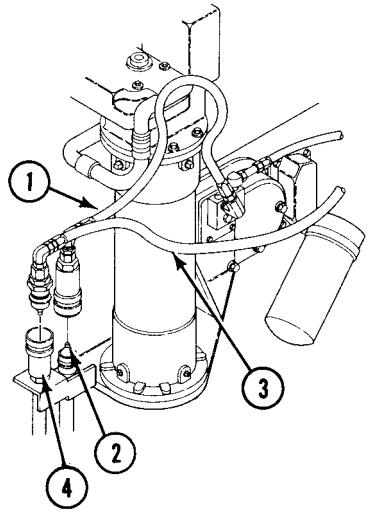

2. REMOVE FUEL RETURN HOSE (3) AT QUICK DISCONNECT (4).

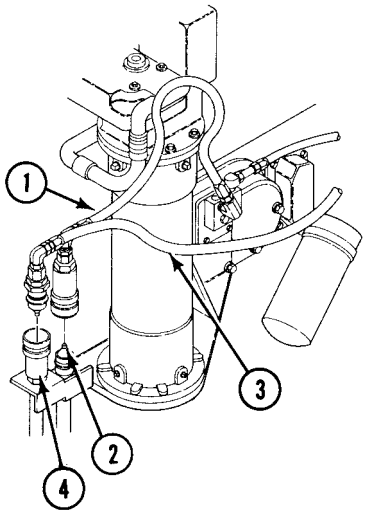

3. REMOVE FUEL SUPPLY HOSE (5) FROM ELBOW (6).
4. REMOVE ELBOW (6) FROM FUEL PUMP (7).
5. REMOVE FUEL SUPPLY HOSE (8) FROM ELBOW (9).
6. REMOVE ELBOW (9) FROM FUEL PUMP (7).
7. REMOVE THREE SCREWS (10), FUEL PUMP (7), GASKET (11), AND FORK (12) FROM ENGINE BLOCK. DISCARD GASKET.

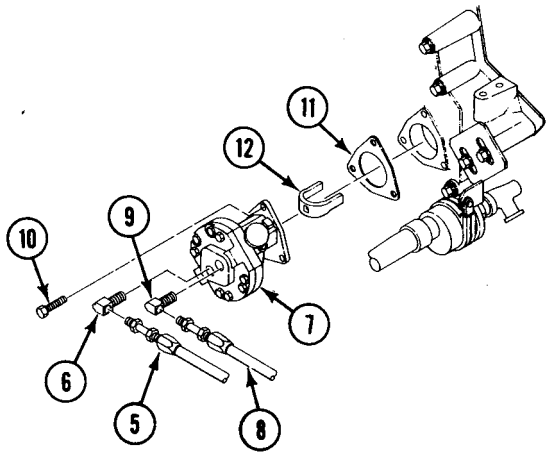

CLEANING

WARNING

Solvent fumes and fluid are poisonous and can cause skin irritation.

Solvent may be harmful if swallowed. Avoid skin contact and breathing of fumes. Read solvent warning at the front of this manual.

WARNING

Solvent evaporates rapidly and makes fumes that are flammable.

Do not smoke or allow open flames near solvent fumes.

Read solvent warning at the front of this manual.

1. CLEAN FUEL PUMP (1) AND FITTINGS WITH CLEANING COMPOUND SOLVENT.

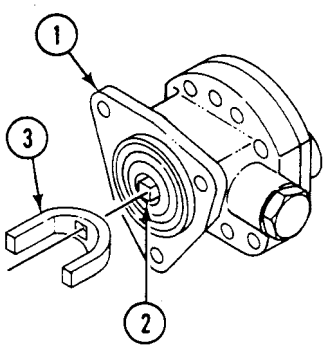

INSPECTION-ACCEPTANCE AND REJECTION CRITERIA

1. CHECK PUMP BODY.
2. CHECK END OF SHAFT (2).

3. CHECK FORK (3).

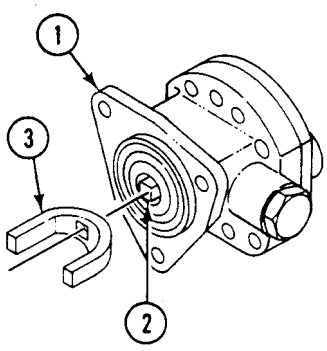

REPAIR OR REPLACEMENT

1. REPLACE PUMP BODY IF DAMAGED.
2. REPLACE SHAFT (2) THAT IS WORN OR DOES NOT ROTATE SMOOTHLY.
3. REPLACE FORK (3) IF WORN OR DAMAGED.

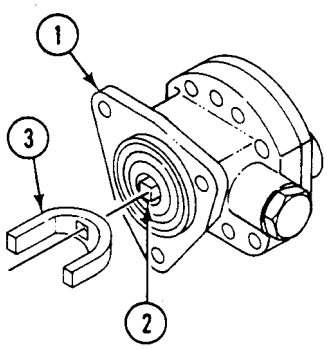

INSTALLATION

1. APPLY ADHESIVE TO EXTERNAL THREADS OF HOSES (5) AND (8) AND ELBOWS (10) AND (9).
2. INSTALL FORK (12), NEW GASKET (11), FUEL PUMP (7), AND THREE SCREWS (10) ON ENGINE BLOCK.
3. INSTALL ELBOW (9) IN FUEL PUMP (7).
4. INSTALL FUEL SUPPLY HOSE (8) ON ELBOW (9).
5. INSTALL ELBOW (9) IN FUEL PUMP (7).

6. INSTALL FUEL SUPPLY HOSE (5) ON ELBOW (6).

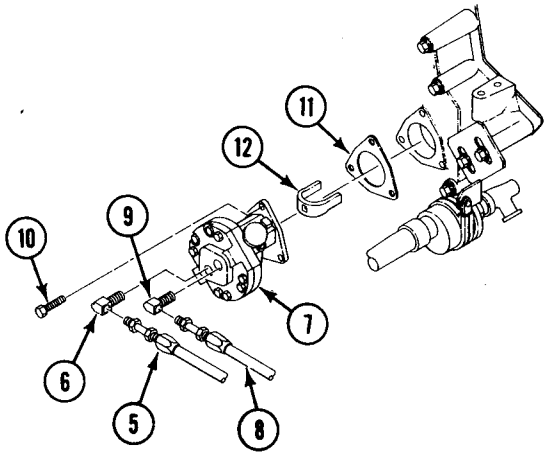

7. INSTALL FUEL SUPPLY HOSE (1) AT QUICK DISCONNECT (2).
8. INSTALL FUEL RETURN HOSE (3) AT QUICK DISCONNECT (4).

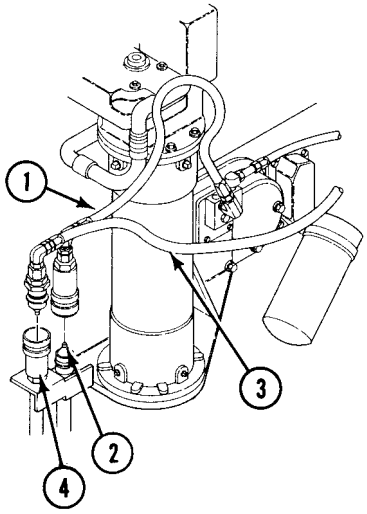

9. INSTALL LEFT EXHAUST ELBOW (WP 0153 00).
10. CONNECT BATTERY GROUND STRAP (WP 0237 00).

WARNING

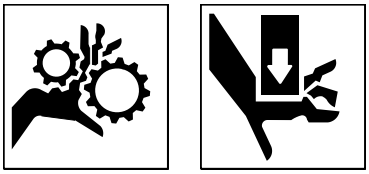

Moving parts of power unit can seriously injure you.

Clear personnel away from power unit before startup. Stay clear of moving parts when power unit is running.

11. START ENGINE. See TM 9-2350-366-10-1. CHECK FOR LEAKS. CHECK FOR CORRECT FUEL PUMP OPERATION.
12. STOP ENGINE. See TM 9-2350-366-10-1.
13. INSTALL POWER PLANT UPPER REAR ACCESS PANEL. See TM 9-2350-366-10-1.
14. INSTALL ENGINE ACCESS COVER PLATE (WP 0308 00).
15. INSTALL VISMOD ACCESS PANEL (WP 0307 00).

END OF TASK

REPLACE FUEL SUPPLY PRESSURE TRANSDUCER 0117 00

THIS WORK PACKAGE COVERS:

Removal (page 0117 00-1).
Installation (page 0117 00-2).

INITIAL SETUP:

Maintenance Level
Unit

Tools and Special Tools
General Mechanic's Tool Kit (WP 0397 00, Item 64)

Materials/Parts
Adhesive (WP 0399 00, Item 4)

Personnel Required
Unit Mechanic 63T10

References
TM 9-2350-366-10-1

Equipment Condition
Engine stopped (TM 9-2350-366-10-1)
Vehicle blocked (TM 9-2350-366-10-1)
Driver's power plant access panel removed (WP 0312 00)

REMOVAL

1. DISCONNECT FUEL SUPPLY PRESSURE TRANSDUCER LEAD (1) FROM WIRING HARNESS (2).
2. REMOVE TRANSDUCER (3) FROM FITTING (4).

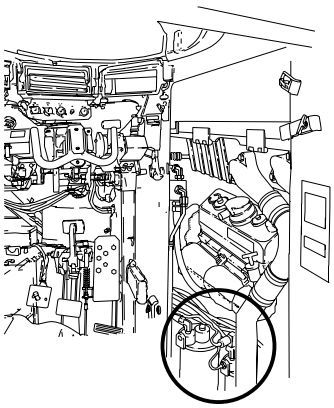

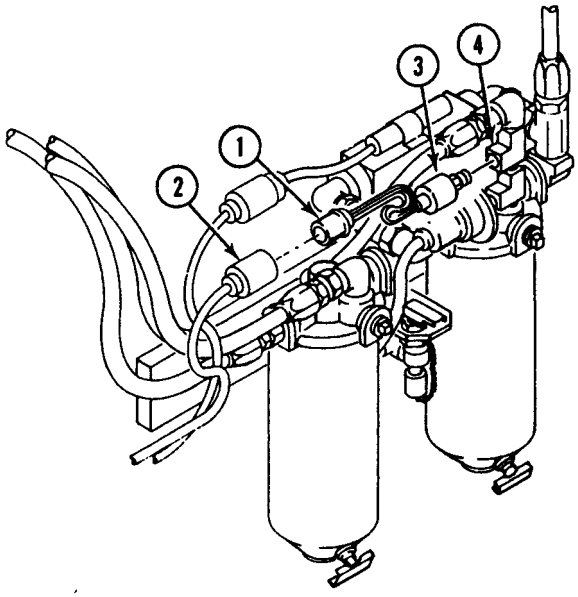

INSTALLATION

1. APPLY A THIN COAT OF ADHESIVE TO THREADS OF TRANSDUCER (3).
2. INSTALL TRANSDUCER (3) ON FITTING (4).
3. CONNECT FUEL SUPPLY PRESSURE TRANSDUCER LEAD (1) TO WIRING HARNESS (2).

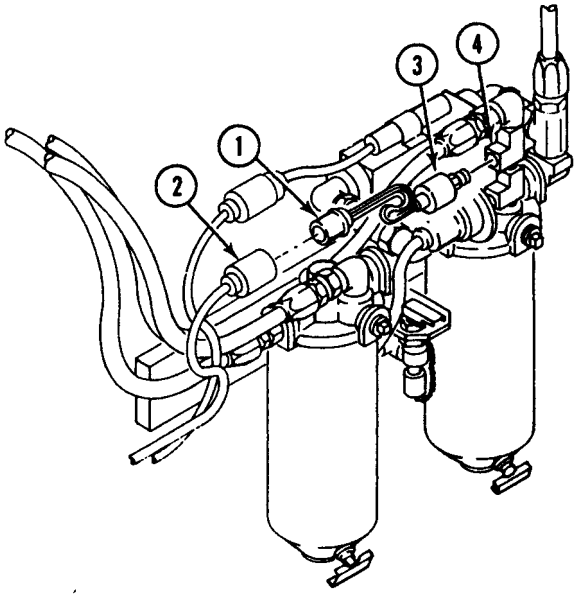

4. INSTALL DRIVER'S POWER PLANT ACCESS PANEL (WP 0312 00).

END OF TASK

REPLACE FUEL RETURN PRESSURE TRANSDUCER 0118 00

THIS WORK PACKAGE COVERS:

Removal (page 0118 00-1).
Installation (page 0118 00-2).

INITIAL SETUP:

Maintenance Level

Unit

Tools and Special Tools

General mechanic's tool kit (WP 0397 00, Item 64)

Materials/Parts

Adhesive (WP 0399 00, Item 4)

Personnel Required

Unit mechanic 63T10

References

TM 9-2350-366-10-1

Equipment Condition

Engine stopped (TM 9-2350-366-10-1)
Vehicle blocked (TM 9-2350-366-10-1)
VISMOD access doors removed (WP 0307 00)
Engine access cover plate removed (WP 0308 00)
Air cleaner removed (WP 0139 00)
Power plant grill removed (WP 0335 00)

REMOVAL

1. DISCONNECT FUEL RETURN PRESSURE TRANSDUCER LEAD (1) FROM STE/ICE WIRING HARNESS (2).
2. DISCONNECT TRANSDUCER (3) FROM TEE (4).

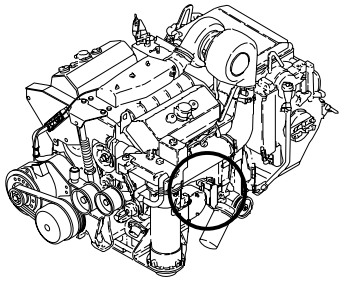

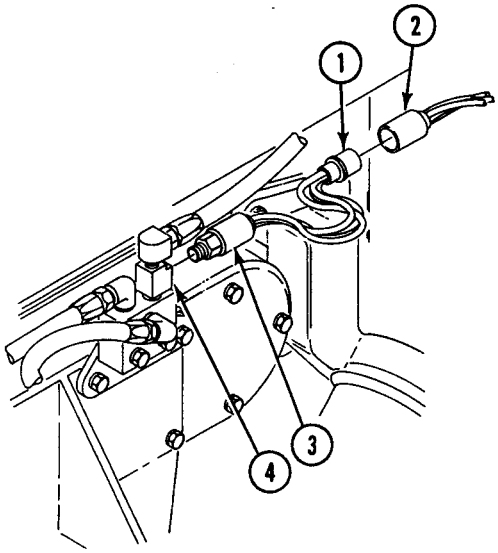

INSTALLATION

WARNING

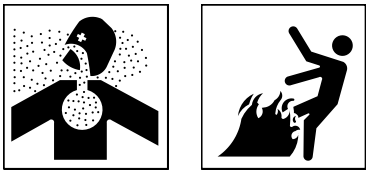

Adhesive, primer, sealant compounds, and isopropyl alcohol are toxic and flammable. These compounds are toxic to eyes, skin, and respiratory tract. Continued exposure can make you dizzy and irritate your eyes and throat.

Always use in well ventilated areas, away from heat, sparks, and flames. Do not breathe fumes. Do not allow into contact with skin and eyes. Use goggles or face shield and protective gloves.

1. APPLY A THIN COAT OF ADHESIVE TO THREADS OF TRANSDUCER (3).
2. CONNECT TRANSDUCER (3) TO TEE (4).
3. CONNECT FUEL RETURN PRESSURE TRANSDUCER LEAD (1) TO STE/ICE WIRING HARNESS (2).

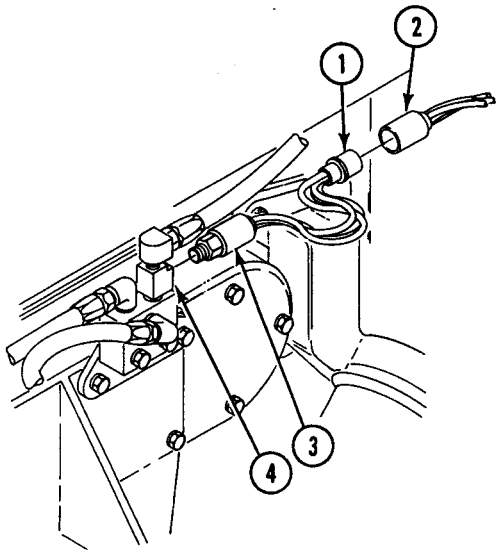

4. INSTALL POWER PLANT GRILL (WP 0335 00).
5. INSTALL AIR CLEANER (WP 0139 00).
6. INSTALL ENGINE ACCESS COVER PLATE (WP 0308 00).
7. INSTALL VISMOD ACCESS DOORS (WP 0307 00).

END OF TASK

REPLACE TURBO OUTLET PRESSURE TRANSDUCER 0119 00

THIS WORK PACKAGE COVERS:

Removal (page 0119 00-1).
Installation (page 0119 00-1).

INITIAL SETUP:

Maintenance Level

Unit

Tools and Special Tools

General Mechanic's Tool Kit (WP 0397 00, Item 64)

Materials/Parts

Adhesive (WP 0399 00, Item 4)

Personnel Required

Unit Mechanic 63T10

References

TM 9-2350-366-10-1
TM 9-2350-366-10-2

Equipment Condition

Engine stopped (TM 9-2350-366-10-1)
Vehicle blocked (TM 9-2350-366-10-1)
Power plant upper rear access panel removed (WP 0309 00)
Rotate turret to 3200 mils

REMOVAL

1. DISCONNECT TRANSDUCER LEAD (1) FROM WIRING HARNESS (2).
2. DISCONNECT TRANSDUCER (3) FROM TURBO OUTLET HOUSING (4).

INSTALLATION

1. APPLY A THIN COAT OF ADHESIVE TO EXTERNAL THREADS OF TRANSDUCER (3).
2. CONNECT TRANSDUCER (3) TO TURBO OUTLET HOUSING (4).

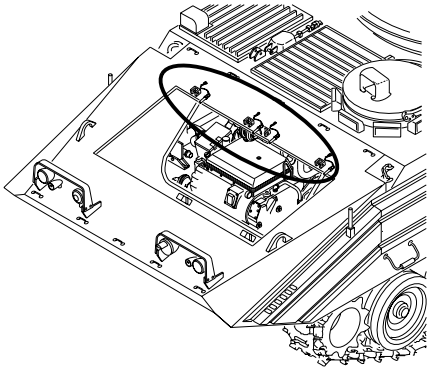

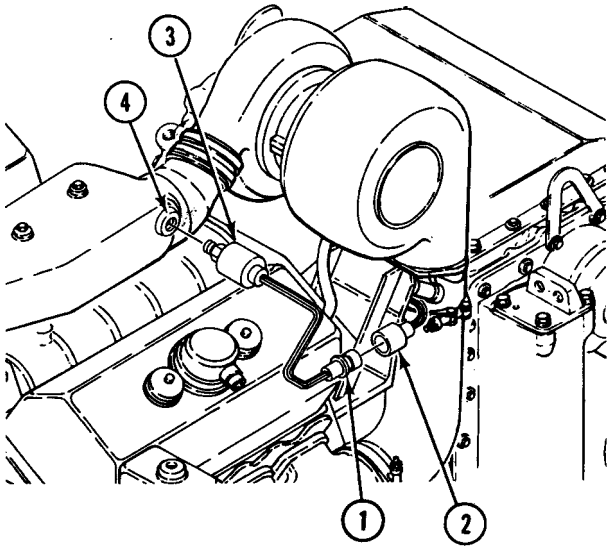

3. CONNECT TRANSDUCER LEAD (1) TO WIRING HARNESS (2).

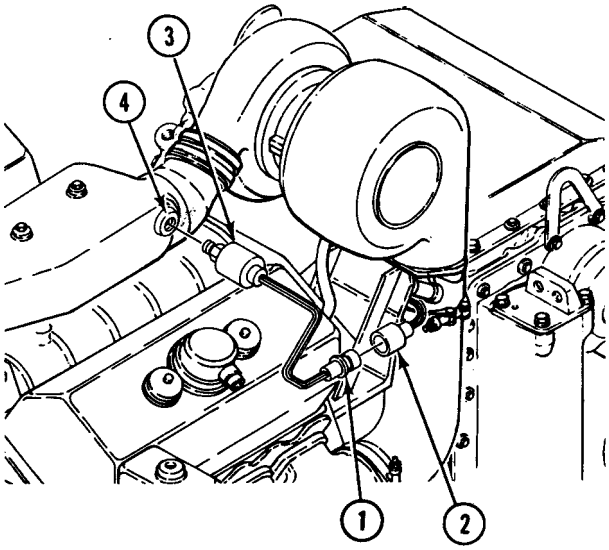

4. ROTATE TURRET TO 6400 MILS OR AS NEEDED. See TM 9-2350-366-10-2.
5. INSTALL POWER PLANT REAR ACCESS PANEL (WP 0309 00).

END OF TASK

REPLACE AIR BOX PRESSURE TRANSDUCER 0120 00

THIS WORK PACKAGE COVERS:

Removal (page 0120 00-1).
Installation (page 0120 00-1).

INITIAL SETUP:

Maintenance Level
Unit

Tools and Special Tools
General Mechanic's Tool Kit (WP 0397 00, Item 64)

Materials/Parts
Adhesive (WP 0399 00, Item 4)

Personnel Required
Unit Mechanic 63T10

References
TM 9-2350-366-10-1

Equipment Condition
Engine stopped (TM 9-2350-366-10-1)
Vehicle blocked (TM 9-2350-366-10-1)
Driver's power plant access panel removed (WP 0312 00)

REMOVAL

1. DISCONNECT AIR BOX PRESSURE TRANSDUCER LEAD (1) FROM STE/ICE WIRING HARNESS (2).
2. DISCONNECT TRANSDUCER (3) FROM HOUSING (4).

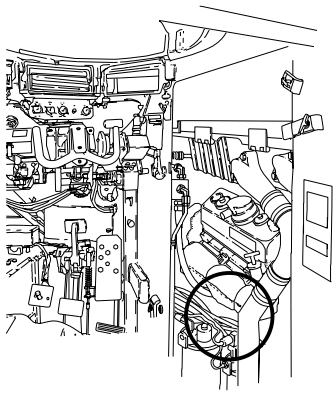

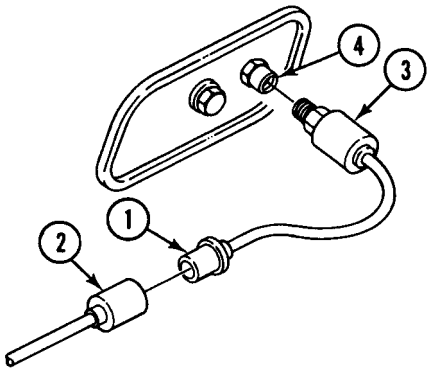

INSTALLATION

1. APPLY A THIN COAT OF ADHESIVE TO THREADS OF TRANSDUCER (3).
2. CONNECT TRANSDUCER (3) TO HOUSING (4).

3. CONNECT AIR BOX PRESSURE TRANSDUCER LEAD (1) TO STE/ICE WIRING HARNESS (2).

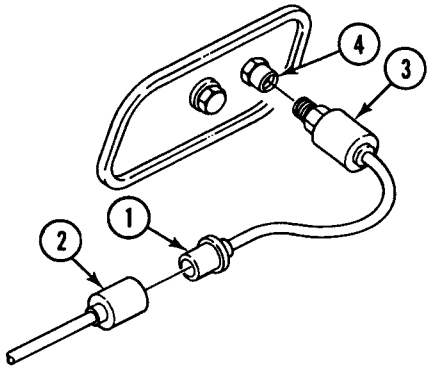

4. INSTALL DRIVER'S ACCESS PANEL (WP 0312 00)

END OF TASK

REPLACE FUEL FILTER DIFFERENTIAL PRESSURE SWITCH 0121 00

THIS WORK PACKAGE COVERS:

Removal (page 0121 00-1).
Installation (page 0121 00-5).

INITIAL SETUP:

Maintenance Level
Unit

Tools and Special Tools
General Mechanic's Tool Kit (WP 0397 00, Item 64)

Materials/Parts
Adhesive (WP 0399 00, Item 4)
Gasket
Locknut (2)
Lock washer (2)

Personnel Required
Unit Mechanic 63T10

References
TM 9-2350-366-10-1
TM 9-2350-366-10-2

Equipment Condition
Engine stopped (TM 9-2350-366-10-1)
Vehicle blocked (TM 9-2350-366-10-1)
Battery ground strap disconnected (WP 0237 00)
Power plant upper rear access panel removed (WP 0309 00)
Driver's compartment access panel removed (WP 0312 00). Turret at 3200 mils.
Rotate turret for access to power plant TM 9-2350-366-10-2

REMOVAL

1. DISCONNECT FUEL SUPPLY HOSE (1) AT QUICK- DISCONNECT FITTING (2).

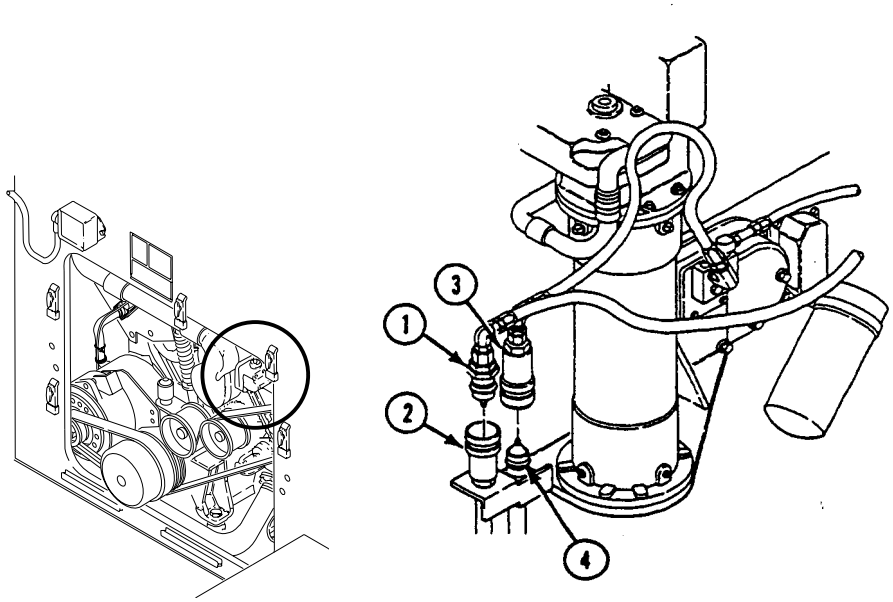

2. DISCONNECT FUEL RETURN HOSE (3) AT QUICK- DISCONNECT FITTING (4).

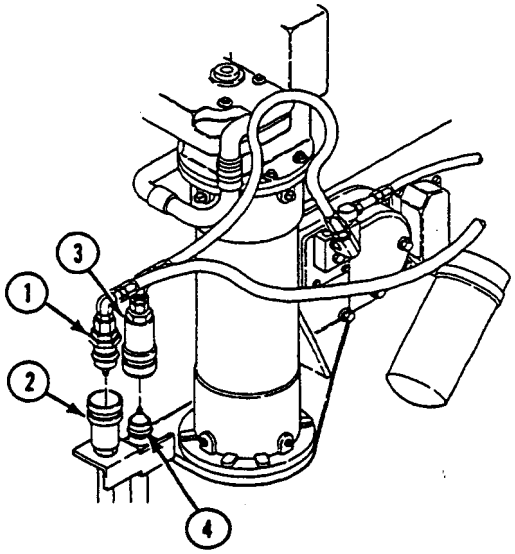

3. DISCONNECT FUEL PRESSURE TRANSDUCER LEAD (5) FROM WIRING HARNESS (6).
4. DISCONNECT DIFFERENTIAL PRESSURE SWITCH LEAD (7) FROM WIRING HARNESS (8).

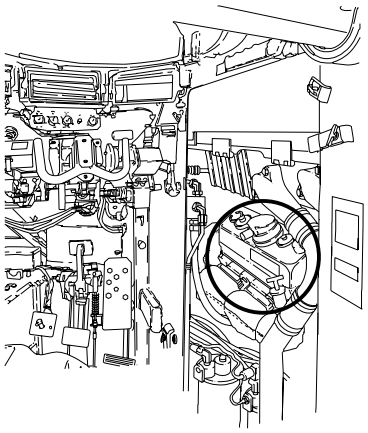

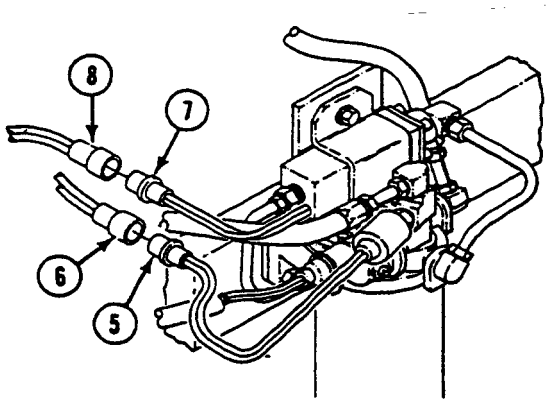

5. DISCONNECT FIELD SWITCH LEAD (1) FROM FIELD SWITCH (2). REMOVE FIELD SWITCH FROM ELBOW (3).

6. REMOVE FUEL TUBE (4) FROM FILTER INLET ELBOW (5) AND FILTER DIFFERENTIAL PRESSURE SWITCH ELBOW (6).

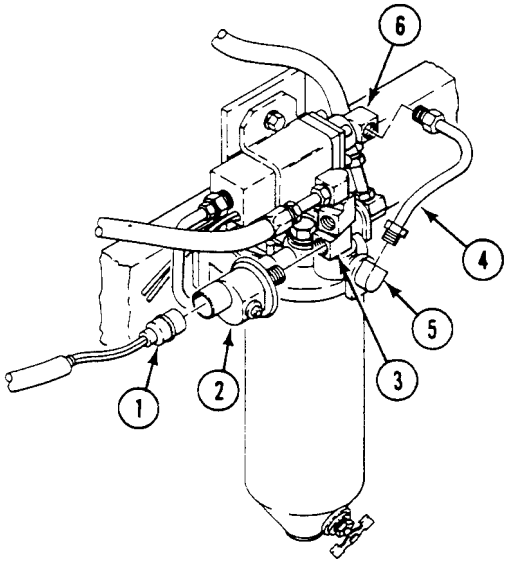

7. DISCONNECT HOSE (7) FROM FUEL FILTER OUTLET ELBOW (8).
8. DISCONNECT HOSE (9) FROM FUEL FILTER ELBOW (10).

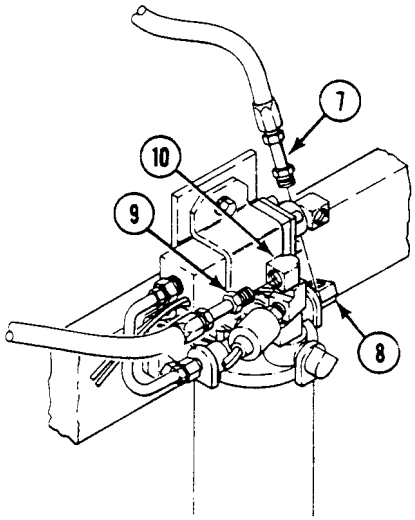

9. REMOVE TUBE (11) FROM FUEL FILTER OUTLET ADAPTER (12) AND FILTER DIFFERENTIAL PRESSURE SWITCH ADAPTER (13).

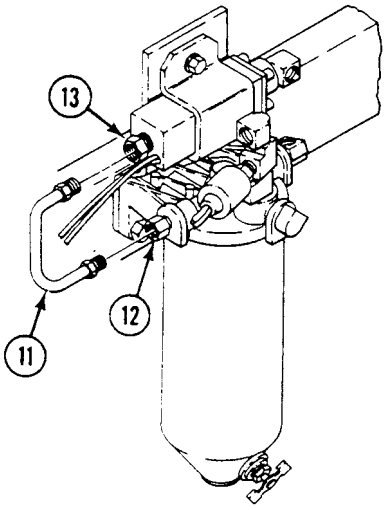

10. PLACE CONTAINER UNDER DRAIN COCK (14). OPEN DRAIN COCK AND DRAIN FUEL. CLOSE DRAIN COCK.
11. HOLD FILTER CANISTER (15). LOOSEN SCREW (16). REMOVE CANISTER AND FILTER ELEMENT (17) FROM FILTER HEAD (18).
12. REMOVE GASKET (19) FROM FILTER HEAD (18). DISCARD GASKET.

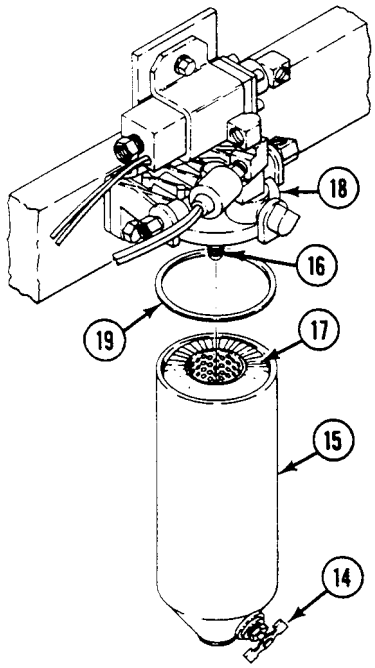

13. REMOVE TWO SCREWS (1), FOUR WASHERS (2), TWO LOCKNUTS (3), FILTER HEAD (4) AND DIFFERENTIAL PRESSURE SWITCH BRACKET (5) FROM ENGINE. DISCARD LOCKNUTS.

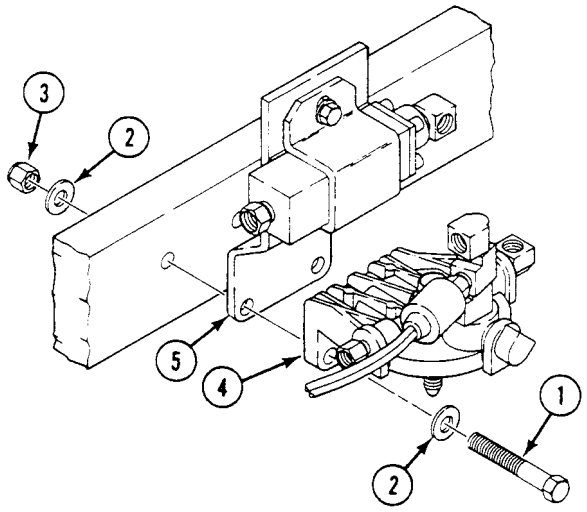

14. CLAMP DIFFERENTIAL PRESSURE SWITCH BRACKET (5) IN VISE. REMOVE ADAPTER (6) AND ELBOW (7) FROM PRESSURE SWITCH (8).

15. REMOVE TWO SCREWS (9), LOCK WASHERS (10), SUPPORT (11) AND DIFFERENTIAL PRESSURE SWITCH (8) FROM BRACKET (5). DISCARD LOCK WASHERS.

INSTALLATION

1. CLAMP BRACKET (5) IN VISE. INSTALL DIFFERENTIAL PRESSURE SWITCH (8) AND SUPPORT (11) ON BRACKET. SECURE WITH TWO SCREWS (9) AND NEW LOCK WASHERS (10).

2. APPLY A THIN COAT OF ADHESIVE TO EXTERNAL THREADS OF FITTINGS.

3. INSTALL ADAPTER (6) AND ELBOW (7) ON DIFFERENTIAL PRESSURE SWITCH (8).

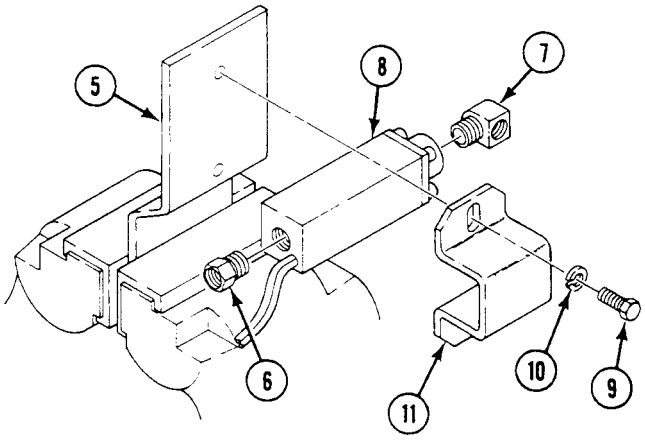

4. INSTALL SWITCH BRACKET (5) AND FILTER HEAD (4) ON ENGINE. SECURE WITH TWO SCREWS (1), FOUR WASHERS (2), AND TWO NEW LOCKNUTS (3).

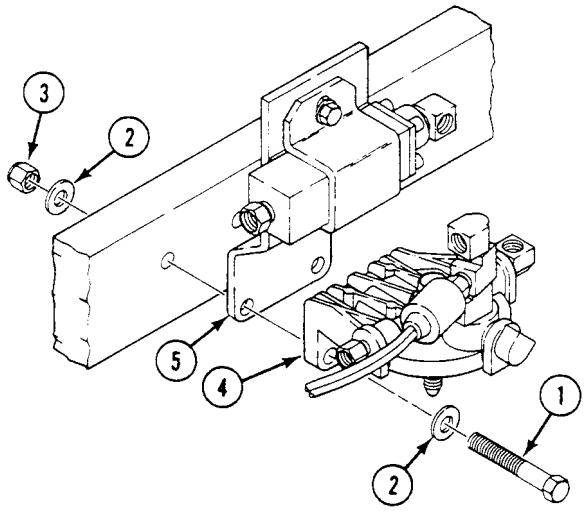

5. INSTALL NEW GASKET (1) ON FILTER HEAD (2).
6. INSTALL FILTER CANISTER (3) WITH FILTER ELEMENT (4) ON FILTER HEAD (2). TIGHTEN SCREW (5).

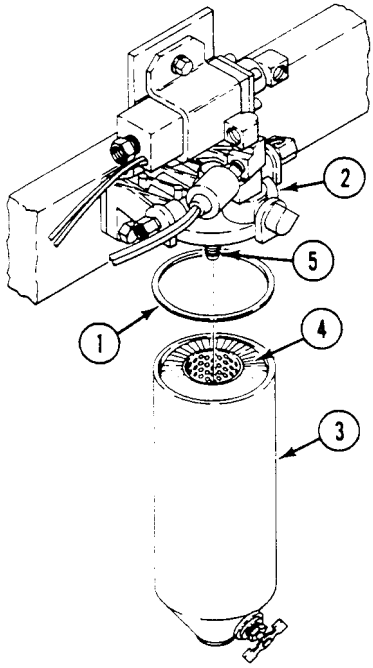

7. INSTALL TUBE (6) ON FUEL FILTER OUTLET ADAPTER (7) AND FILTER DIFFERENTIAL PRESSURE SWITCH ADAPTER (8).

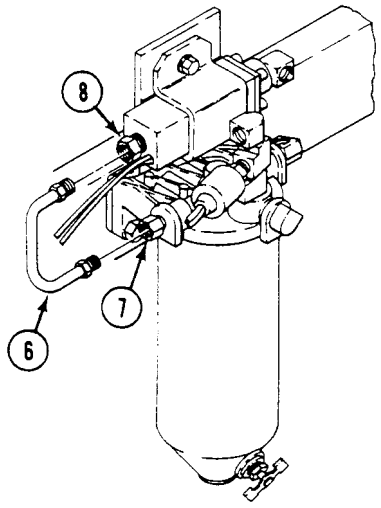

8. CONNECT HOSE (9) TO FUEL FILTER ELBOW (10).
9. CONNECT HOSE (11) TO FUEL FILTER OUTLET ELBOW (12).

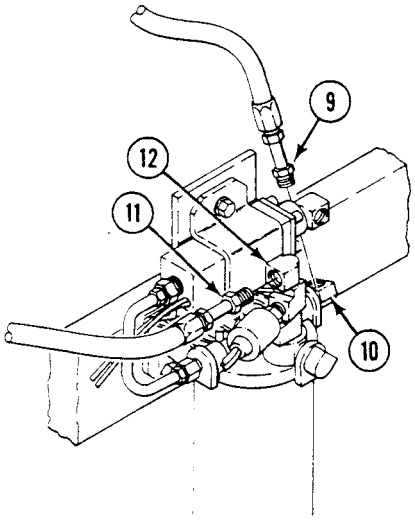

10. INSTALL TUBE (13) ON FILTER INLET ELBOW (14) AND FILTER DIFFERENTIAL PRESSURE SWITCH ELBOW (15).
11. APPLY A THIN COAT OF ADHESIVE TO EXTERNAL THREADS OF FIELD SWITCH (16).

12. INSTALL FIELD SWITCH (16) ON ELBOW (17). CONNECT LEAD (18) TO FIELD SWITCH.

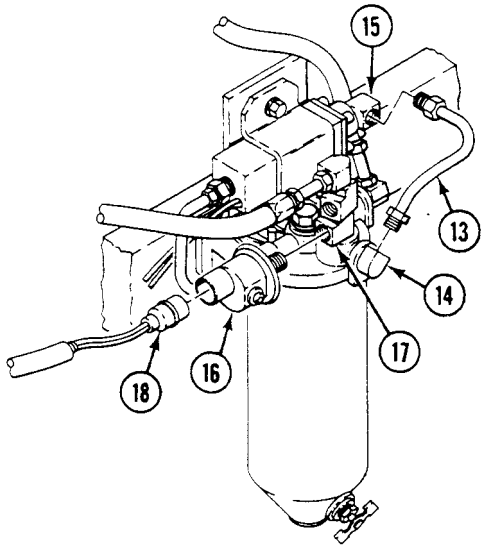

13. CONNECT DIFFERENTIAL PRESSURE SWITCH LEAD (1) TO WIRING HARNESS (2).
14. CONNECT FUEL PRESSURE TRANSDUCER LEAD (3) TO WIRING HARNESS (4).

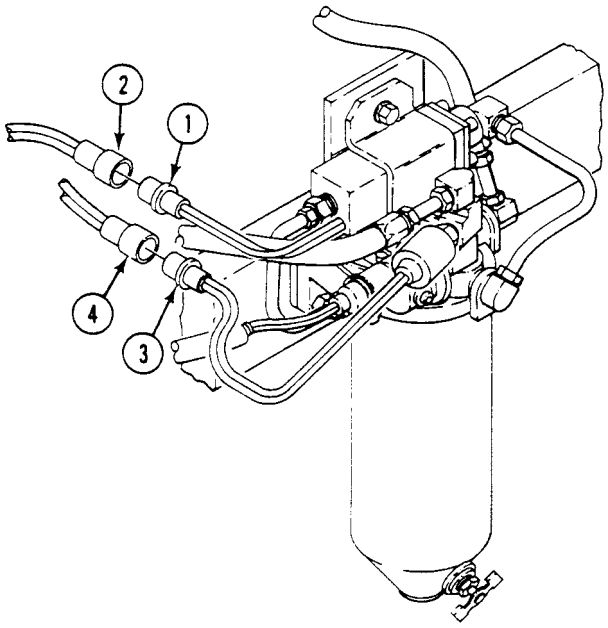

15. CONNECT FUEL SUPPLY HOSE (1) AT QUICK- DISCONNECT FITTING (2).

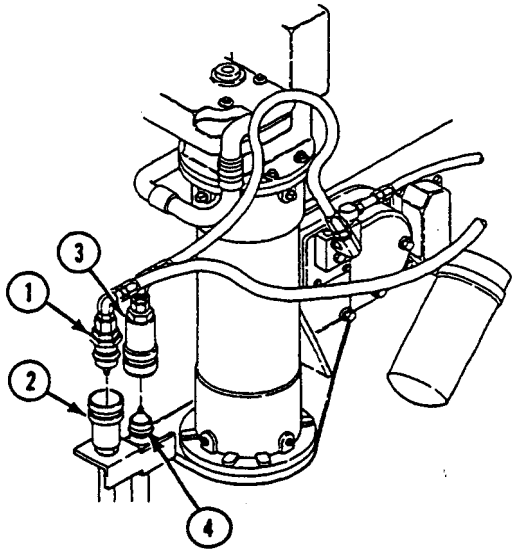

16. CONNECT FUEL RETURN HOSE (3) AT QUICK- DISCONNECT FITTING (4).

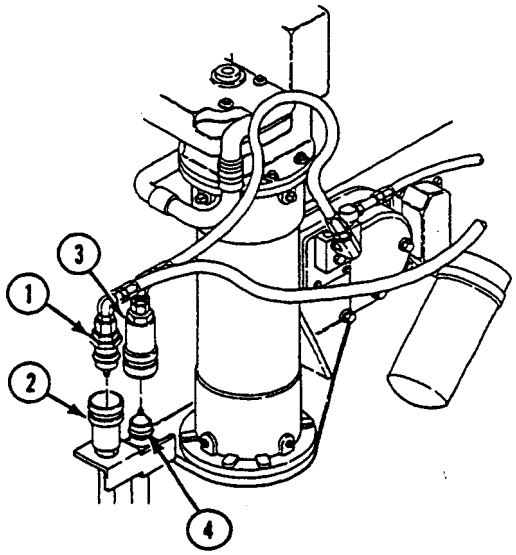

17. ROTATE TURRET TO 6400 MILS OR AS NEEDED. See TM 9-2350-366-10-2.

18. INSTALL DRIVER'S ACCESS PANEL (WP 0312 00).

19. INSTALL POWER PLANT UPPER REAR ACCESS PANEL (WP 0309 00).

20. CONNECT BATTERY GROUND STRAP (WP 0237 00).

END OF TASK

REPLACE AUXILIARY TANK FLUID LEVEL DETECTOR 0122 00

THIS WORK PACKAGE COVERS:

Removal (page 0122 00-1).
Installation (page 0122 00-2).

INITIAL SETUP:

Maintenance Level

Unit

Tools and Special Tools

General Mechanic's Tool Kit (WP 0397 00, Item 64)

Materials/Parts

Sealing compound (WP 0399 00, Item 55)

Personnel Required

Unit Mechanic 63T10

References

TM 9-2350-366-10-1

Equipment Condition

Engine stopped (TM 9-2350-366-10-1)
Vehicle blocked (TM 9-2350-366-10-1)
Power plant upper rear access panel removed (WP 0309 00)
Cooling system drained until auxiliary tank empty (WP 0155 00)

REMOVAL

1. DISCONNECT DETECTOR CABLE (1) FROM CONNECTOR (2).

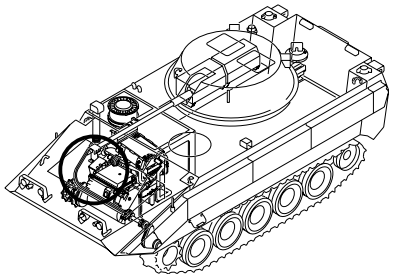

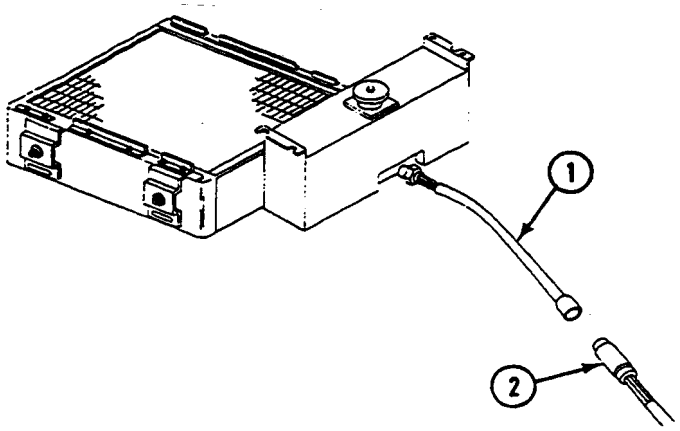

2. REMOVE DETECTOR (3) FROM AUXILIARY TANK (4).

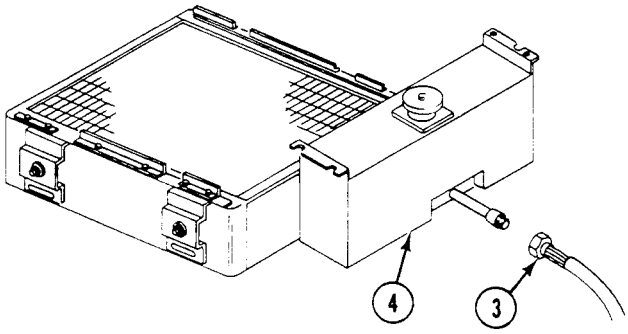

INSTALLATION

1. APPLY SEALING COMPOUND TO THREADS OF DETECTOR (3).
2. INSTALL DETECTOR (3) ON AUXILIARY TANK (4).

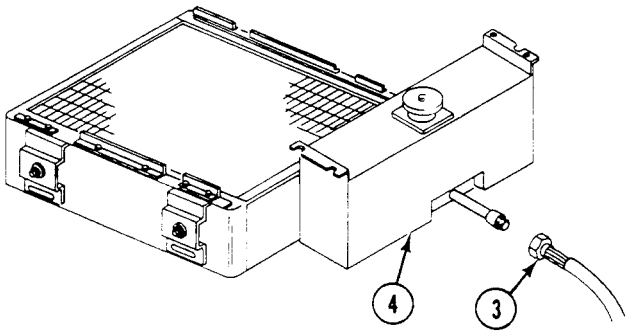

3. CONNECT DETECTOR CABLE (1) TO CONNECTOR (2).

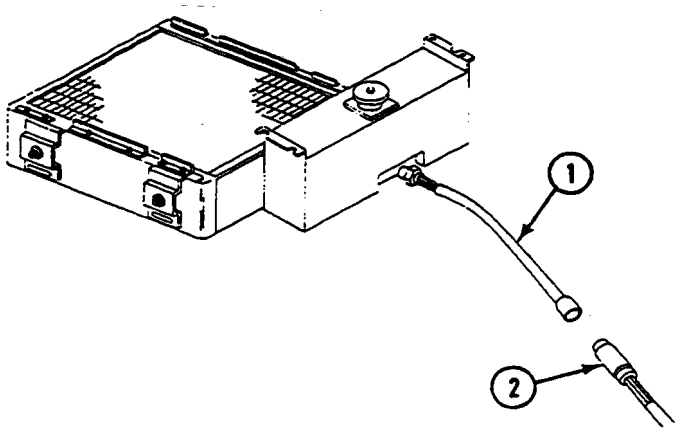

4. FILL COOLING SYSTEM (WP 0155 00).

5. INSTALL POWER PLANT UPPER REAR ACCESS PANEL (WP 0309 00).

END OF TASK

DRAIN TANKS 0123 00

THIS WORK PACKAGE COVERS:

Servicing (page 0123 00-1).

INITIAL SETUP:

Maintenance Level
Unit

Tools and Special Tools
General Mechanic's Tool Kit (WP 0397 00, Item 64)

Materials/Parts
30 Gallon (114 liter) container (2)

Personnel Required
Unit Mechanic 63T10

References
TM 9-2350-366-10-1

Equipment Condition
Engine stopped (TM 9-2350-366-10-1)
Vehicle blocked (TM 9-2350-366-10-1)
Battery ground strap disconnected (WP 0237 00)

SERVICING

1. OPEN FUEL FILLER COMBAT COVER (2). REMOVE FUEL FILLER CAP. See TM 9-2350-366-10-1.
2. PLACE A CONTAINER (4), WITH AT LEAST 30 GALLON (114 LITERS) CAPACITY, DIRECTLY BENEATH THE FUEL TANK (3).

WARNING

Fuel flowing over a metal surface causes static electricity. This will cause a spark unless the surface is grounded.

3. GROUND CONTAINER (4) TO CARRIER.

4. SHUT OFF BOTH FUEL TANK (3) SHUTOFF VALVES. DRAIN FUEL (3).

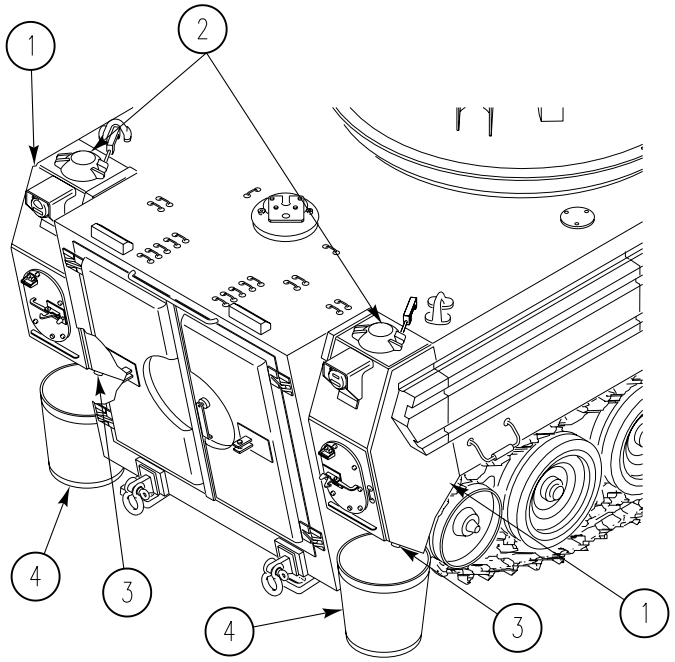

5. INSTALL PLUG IN FUEL TANK (3) AFTER THE TANK HAS BEEN DRAINED.

6. INSTALL FUEL FILLER CAP. CLOSE FILLER COMBAT COVER (2) TO KEEP DIRT OUT OF TANKS.

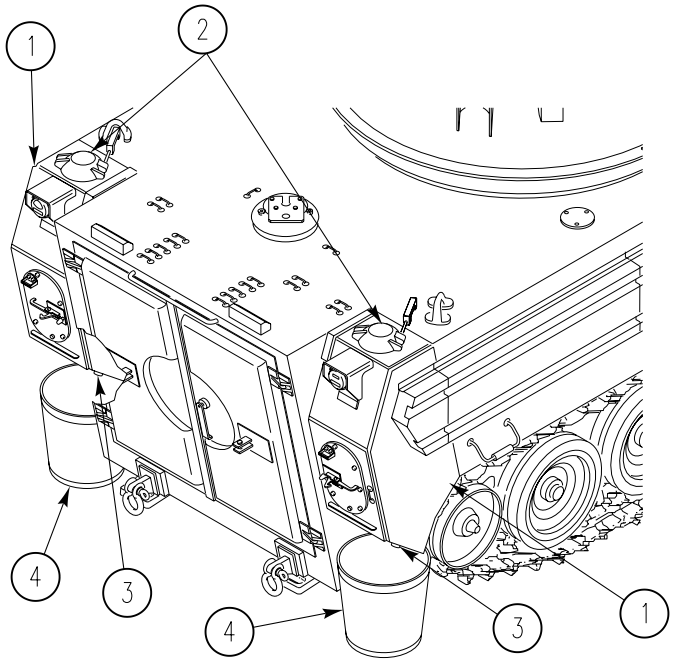

7. CONNECT BATTERY GROUND STRAP (WP 0237 00).

8. AFTER MAINTENANCE HAS BEEN PERFORMED, FILL FUEL TANKS. See TM 9-2350-366-10-1.

END OF TASK

REPLACE FUEL QUANTITY TRANSMITTER 0124 00

THIS WORK PACKAGE COVERS:

Removal (page 0124 00-1).
Inspection (page 0124 00-2).
Repair (page 0124 00-2).
Installation (page 0124 00-2).

INITIAL SETUP:

Maintenance Level
Unit

Tools and Special Tools
General Mechanic's Tool Kit (WP 0397 00, Item 64)

Materials/Parts
Sealing compound (WP 0399 00, Item 55)

Personnel Required
Unit Mechanic 63T10

References
TM 9-2350-366-10-1

Equipment Condition
Engine stopped (TM 9-2350-366-10-1)
Carrier blocked (TM 9-2350-366-10-1)
Battery ground strap disconnected (WP 0237 00)
Fuel tanks drained (WP 0123 00)
Fuel tank access covers removed (TM 9-2350-366-10-1)
Tail lights and guards removed (WP 0232 00)

REMOVAL

NOTE

Right and left fuel quantity transmitters are replaced the same. The following steps apply to one unit.

1. DISCONNECT LEAD (1) FROM TRANSMITTER (2). CIRCUIT 30A IS LEFT TANK TRANSMITTER LEAD. CIRCUIT 31A IS RIGHT TANK TRANSMITTER LEAD.
2. REMOVE TWO SCREWS (3), WASHERS (4), BRACKET (5), AND TRANSMITTER (2) FROM FUEL TANK (6).
3. REMOVE SCREW (7), WASHER (8), AND CLAMP (9) THAT SECURES LEAD (1) TO FUEL TANK (6).
4. REMOVE CONNECTOR (10) AND LEAD (1) FROM FUEL TANK (6).
5. REMOVE FIVE SCREWS (11) AND NUTS (12). SEPARATE TRANSMITTER (2) FROM BRACKET (5).

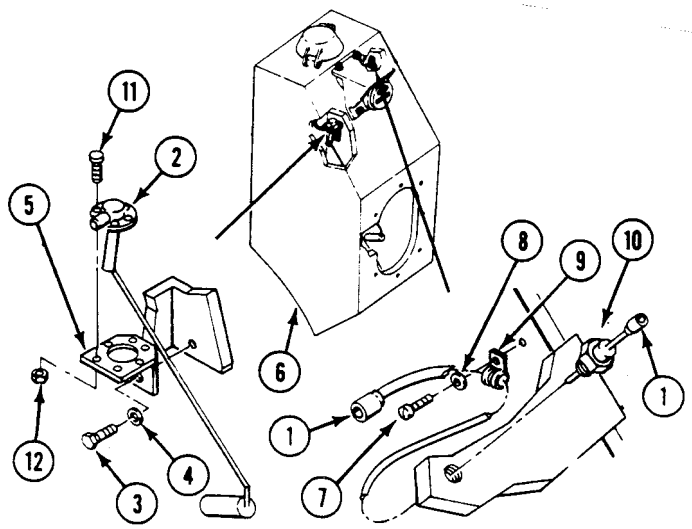

INSPECTION-ACCEPTANCE AND REJECTION CRITERIA

1. INSPECT BRACKET.
2. INSPECT CONNECTOR.

REPAIR OR REPLACEMENT

1. REPLACE BRACKET IF CRACKED.
2. REPLACE CONNECTOR THAT IS CRACKED OR HAS STRIPPED THREADS (WP 0230 00).

INSTALLATION

1. APPLY A THIN COAT OF SEALING COMPOUND TO CLEANED EXTERNAL THREADS OF CONNECTOR (1) BEFORE INSTALLATION.
2. SECURE TRANSMITTER (2) TO BRACKET (3) WITH FIVE SCREWS (4) AND NUTS (5).
3. INSTALL BRACKET (3) AND TRANSMITTER (2) ON FUEL TANK (6). SECURE WITH TWO SCREWS (7) AND WASHERS (8).
4. INSTALL LEAD (9) AND CONNECTOR (1) IN TANK (6).
5. CONNECT LEAD (9) TO TRANSMITTER (2). CIRCUIT 30A IS LEFT TANK TRANSMITTER LEAD. CIRCUIT 31A IS RIGHT TANK TRANSMITTER LEAD.
6. SECURE LEAD (9) TO TANK (6) WITH CLAMP (10), WASHER (11), AND SCREW (12).

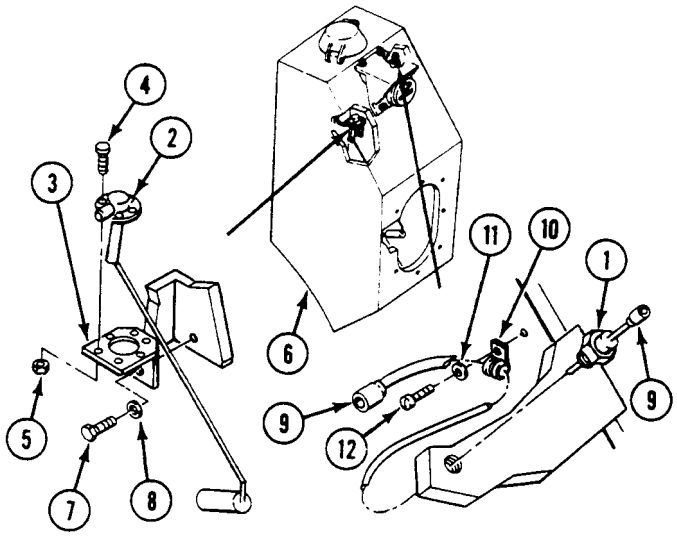

7. INSTALL TAIL LIGHTS AND GUARDS (WP 0232 00).
8. INSTALL FUEL TANK ACCESS COVERS. See TM 9-2350-366-10-1.
9. FILL FUEL TANKS (TM 9-2350-366-10-1).
10. CONNECT BATTERY GROUND STRAP (WP 0237 00).
11. CHECK THAT FUEL QUANTITY TRANSMITTER WORKS PROPERLY (WP 0034 00).

END OF TASK

REPLACE FUEL SELECT SWITCH TO GAUGE LEAD 0125 00

THIS WORK PACKAGE COVERS:

Removal (page 0125 00-1).
Installation (page 0125 00-2).

INITIAL SETUP:

Maintenance Level

Unit

Tools and Special Tools

General Mechanic's Tool Kit (WP 0397 00, Item 64)
Multimeter (WP 0397 00, Item 30)

Personnel Required

Unit Mechanic 63T10

References

TM 9-2350-366-10-1

Equipment Condition

Engine stopped (TM 9-2350-366-10-1)
Vehicle blocked (TM 9-2350-366-10-1)
Battery ground strap disconnected (WP 0237 00)
Instrument panel removed (WP 0220 00)

REMOVAL

1. Disconnect circuit 28 lead (1) from fuel select switch (2).
2. Disconnect circuit 28 lead (1) from fuel gauge (3). Remove lead.

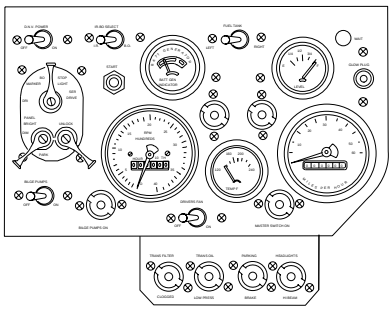

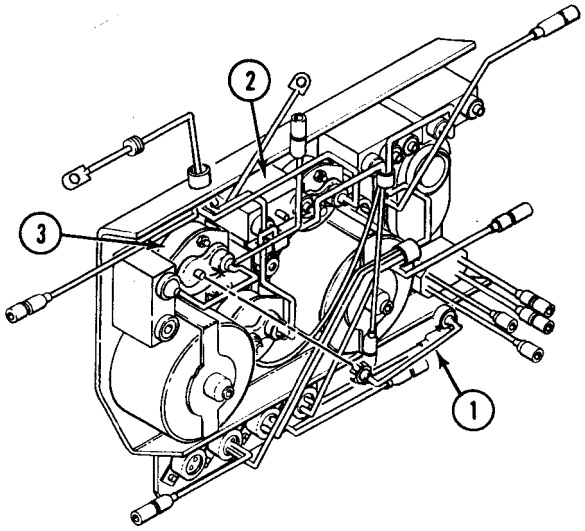

INSTALLATION

1. Connect circuit 28 lead (1) to fuel gauge (3).
2. Connect circuit 28 lead (1) to fuel select switch (2).

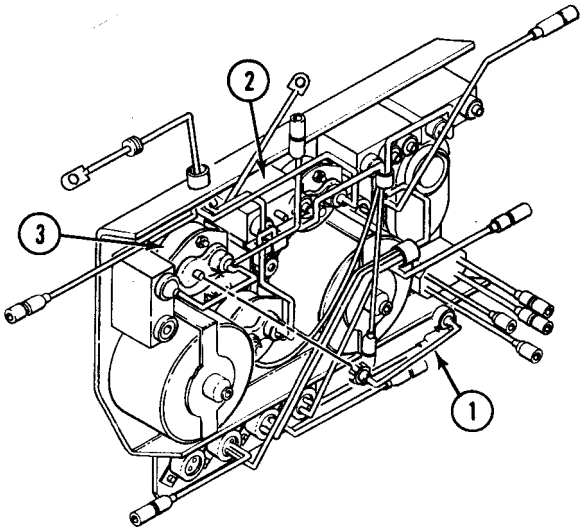

3. INSTALL INSTRUMENT PANEL (WP 0191 00).
4. CONNECT BATTERY GROUND STRAP (WP 0237 00).
5. TURN MASTER SWITCH ON. See TM 9-2350-366-10-1.
6. CHECK FUEL GAUGE FOR MOVEMENT TO ENSURE PROPER INSTALLATION OF LEAD. See TM 9-2350-366-10-1
7. TURN MASTER SWITCH OFF. See TM 9-2350-366-10-1.

END OF TASK

REPLACE GLOW PLUG HARNESS AND GLOW PLUGS 0126 00

THIS WORK PACKAGE COVERS:

Removal (page 0126 00-1).
Installation (page 0126 00-2).

INITIAL SETUP:

Maintenance Level

Unit

Tools and Special Tools

General Mechanic's Tool Kit (WP 0397 00, Item 64)
Torque wrench (WP 0397 00, Item 79)

Personnel Required

Unit Mechanic 63T10

References

TM 9-2350-366-10-1

Equipment Condition

Engine stopped (TM 9-2350-366-10-1)
Carrier blocked (TM 9-2350-366-10-1)
Rear engine access panel removed (WP 0309 00)
Battery ground strap disconnected (WP 0237 00)

REMOVAL

1. REMOVE TWO BOLTS (1) AND NUTS (2) SECURING TWO CLIPS (3) ON GLOW PLUG HARNESS (4) TO TWO BRACKETS (5) ON LEFT CYLINDER HEAD (6).
2. DISCONNECT THREE PLUG ENDS (7) OF GLOW PLUG HARNESS (4) FROM GLOW PLUGS (8).
3. REMOVE THREE GLOW PLUGS (8) FROM LEFT CYLINDER HEAD (6).
4. REPEAT Steps 1 - 3 FOR OPPOSITE SIDE.
5. DISCONNECT AND REMOVE GLOW PLUG HARNESS (4) FROM RIGHT SIDE (9) OF CONTROLLER (10).
6. IF NECESSARY, REMOVE FOUR CLIPS (3) FROM GLOW PLUG HARNESS (4).

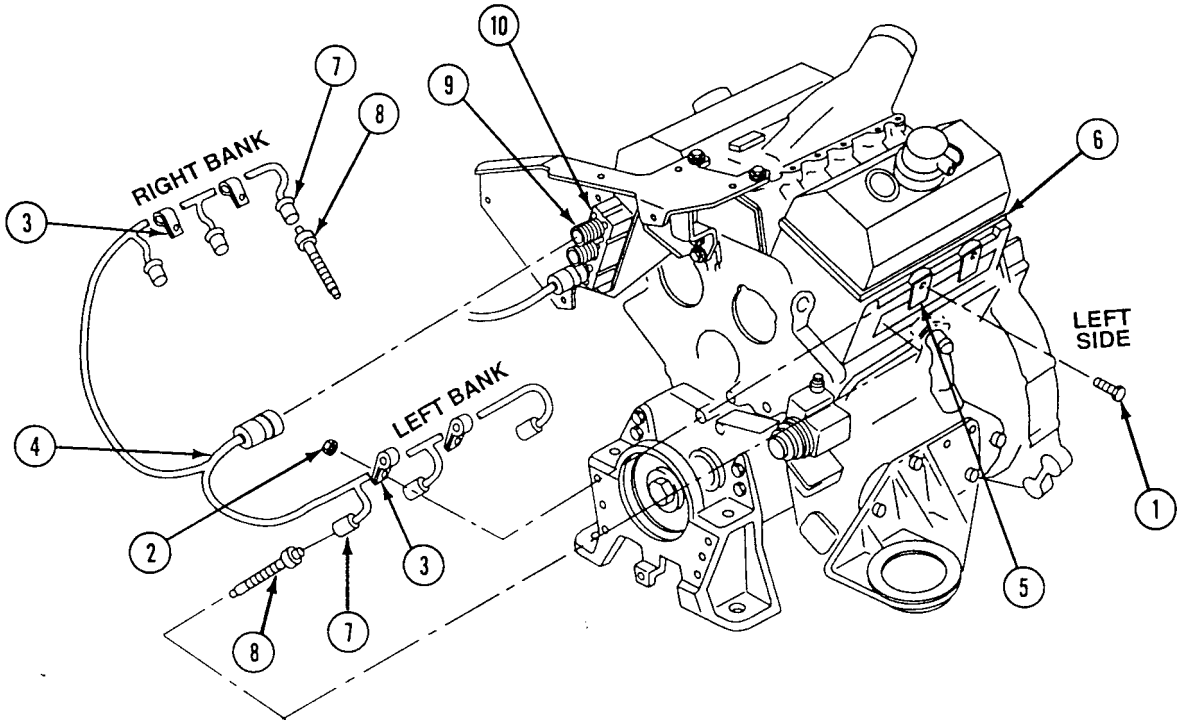

INSTALLATION

1. IF REMOVED, INSTALL TWO CLIPS (1) ON EACH SIDE OF GLOW PLUG HARNESS (2).
2. CONNECT GLOW PLUG HARNESS (2) TO RIGHT SIDE (3) OF GLOW PLUG CONTROLLER (4).
3. INSTALL THREE GLOW PLUGS (5) IN LEFT CYLINDER HEAD (6). TIGHTEN GLOW PLUGS TO 132-156 LB-IN (15-18 N·M) TORQUE.

CAUTION

Glow plug harness leads are identified with location as to right or left bank. Correct installation of wires is necessary for proper diagnostics to aid in locating a failed glow plug.

4. CONNECT THREE PLUG ENDS (7) OF GLOW PLUG HARNESS (2) TO GLOW PLUGS (5) IN LEFT CYLINDER HEAD (6).
5. SECURE GLOW PLUG HARNESS (1) TO TWO BRACKETS (2) ON LEFT SIDE CYLINDER (3) WITH TWO CLIPS (4), BOLTS (5), AND NUTS (6). TORQUE BOLTS TO 360-420 LB-IN (41-47 N·M).
6. REPEAT WP 0126 00, Steps 2 - 5 FOR OPPOSITE SIDE.

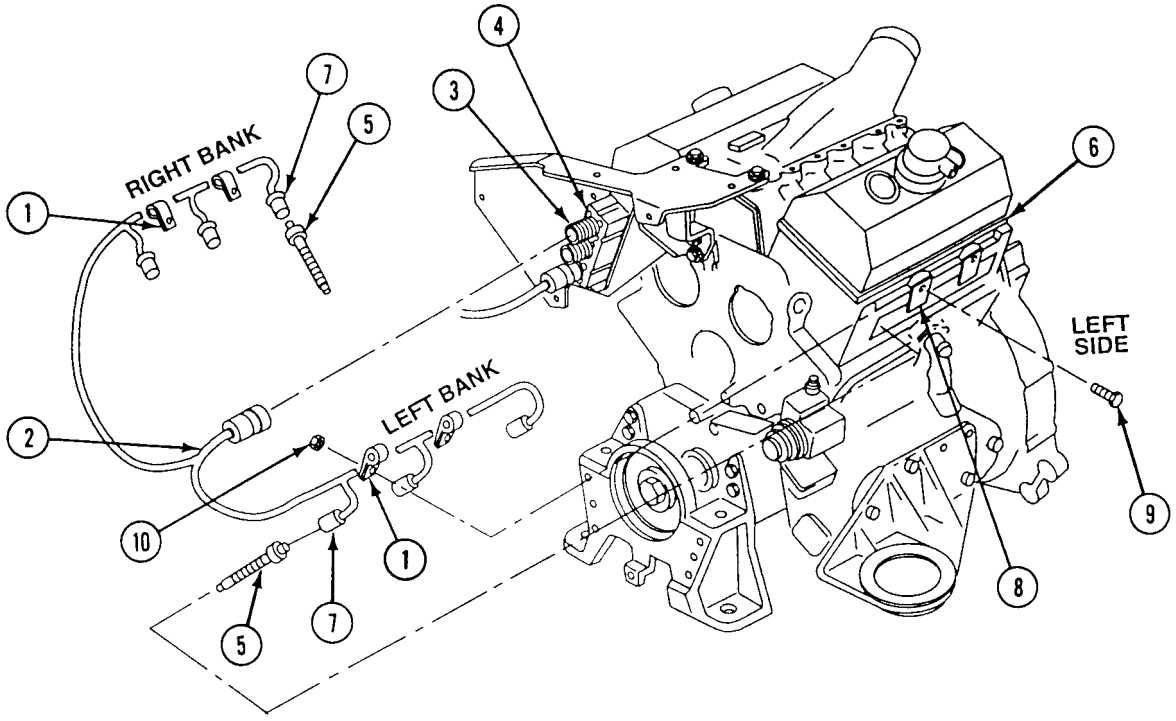

END OF TASK

REPLACE GLOW PLUG CONTROLLER 0127 00

THIS WORK PACKAGE COVERS:

Removal (page 0127 00-1).
Installation (page 0127 00-2).

INITIAL SETUP:

Maintenance Level
Unit

Tools and Special Tools
General Mechanic's Tool Kit (WP 0397 00, Item 64)
Torque wrench (WP 0397 00, Item 79)

Materials/Parts
Lockwasher (2)

Personnel Required
Unit mechanic 63T10

References
TM 9-2350-366-10

Equipment Condition
Engine stopped (TM 9-2350-366-10-1)
Carrier blocked (TM 9-2350-366-10-1)
Power plant rear access panel removed (WP 0309 00)
Battery ground strap disconnected (WP 0237 00)

REMOVAL

1. DISCONNECT AND REMOVE GLOW PLUG POWER HARNESS (1) FROM LEFT SIDE (2) OF GLOW PLUG CONTROLLER (3).
2. DISCONNECT AND REMOVE GLOW PLUG HARNESS (4) FROM RIGHT SIDE (5) OF GLOW PLUG CONTROLLER (3).

3. REMOVE TWO BOLTS (6), LOCKWASHERS (7), NUTS (8), FOUR WASHERS (9), AND GLOW PLUG CONTROLLER (3) FROM MOUNTING BRACKET (10) IN FRONT OF ENGINE. DISCARD LOCKWASHERS.

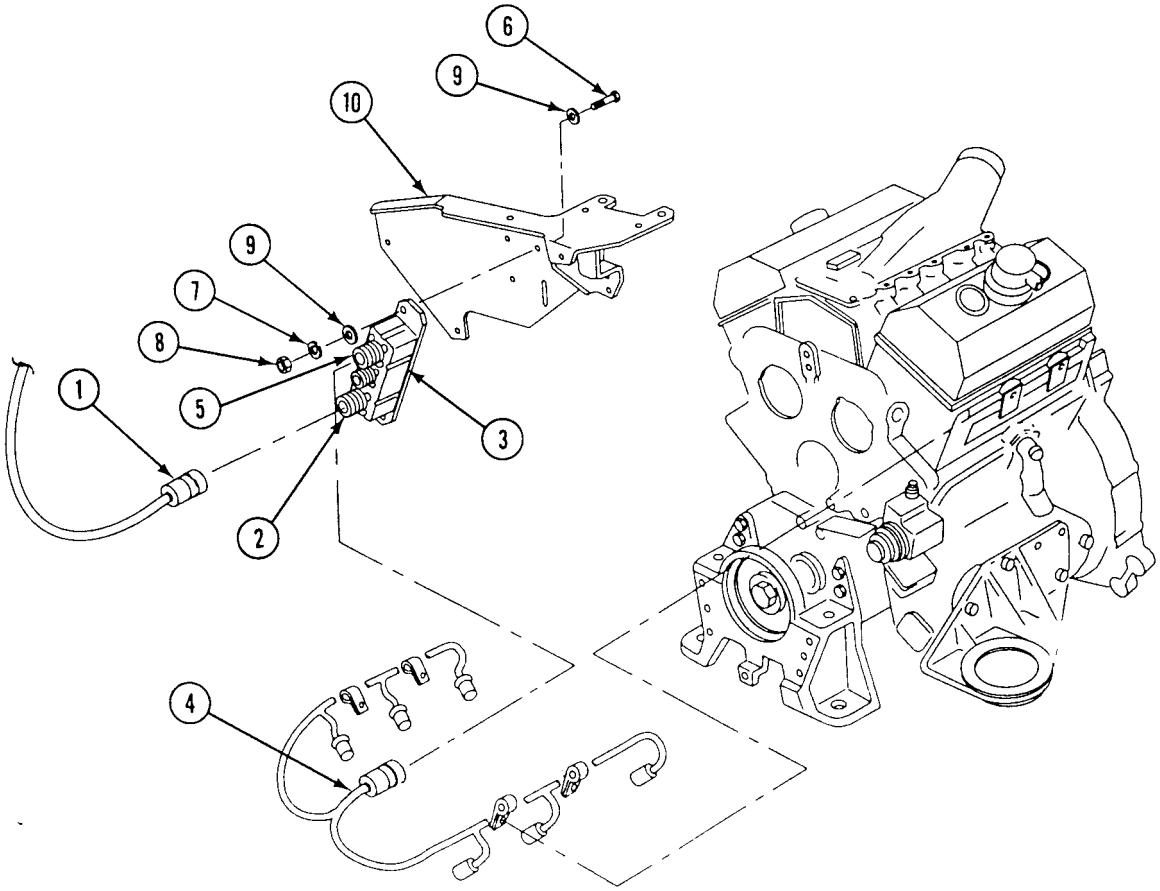

INSTALLATION

1. INSTALL GLOW PLUG CONTROLLER (3), TWO BOLTS (6), NEW LOCKWASHERS (7), NUTS (8), AND FOUR WASHERS (9) ON MOUNTING BRACKET (10). TIGHTEN BOLTS TO 156-204 LB-IN (18-23 N·M) TORQUE.
2. CONNECT GLOW PLUG HARNESS (4) TO RIGHT SIDE (5) OF GLOW PLUG CONTROLLER (3).

3. CONNECT GLOW PLUG POWER HARNESS (1) TO LEFT SIDE (2) OF GLOW PLUG CONTROLLER (3).

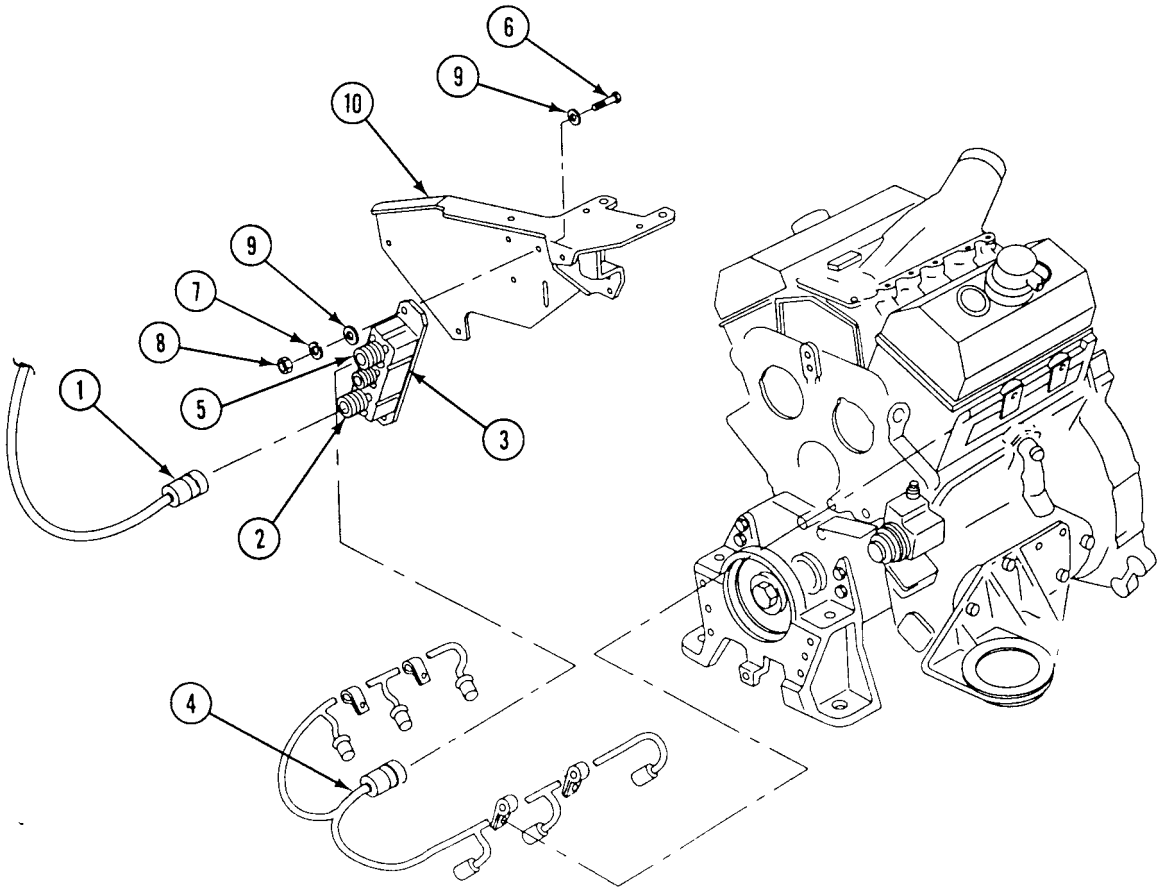

END OF TASK

REPLACE GLOW PLUG POWER HARNESS 0128 00

THIS WORK PACKAGE COVERS:

Removal (page 0128 00-1).
Installation (page 0128 00-2).

INITIAL SETUP:

Maintenance Level
Unit

Tools and Special Tools
General Mechanic's Tool Kit (WP 0397 00, Item 64)

Materials/Parts
Lock washer (3)
Tie straps (as required)

Personnel Required
Unit Mechanic 63T10

References
TM 9-2350-366-10-1

Equipment Condition
Engine stopped (TM 9-2350-366-10-1)
Vehicle blocked (TM 9-2350-366-10-1)
Driver's power plant access panel removed (WP 0312 00)
Power plant rear access panel removed (WP 0309 00)
Battery ground strap disconnected (WP 0237 00)

REMOVAL

1. REMOVE NUT (1), LOCK WASHER (2), AND RED DOUBLE LEAD (3) FROM BATTERY TERMINAL (4)ON SOLENOID (5). DO NOT REMOVE OTHER LEADS. REINSTALL NUT ON BATTERY TERMINAL. DISCARD LOCK WASHER.

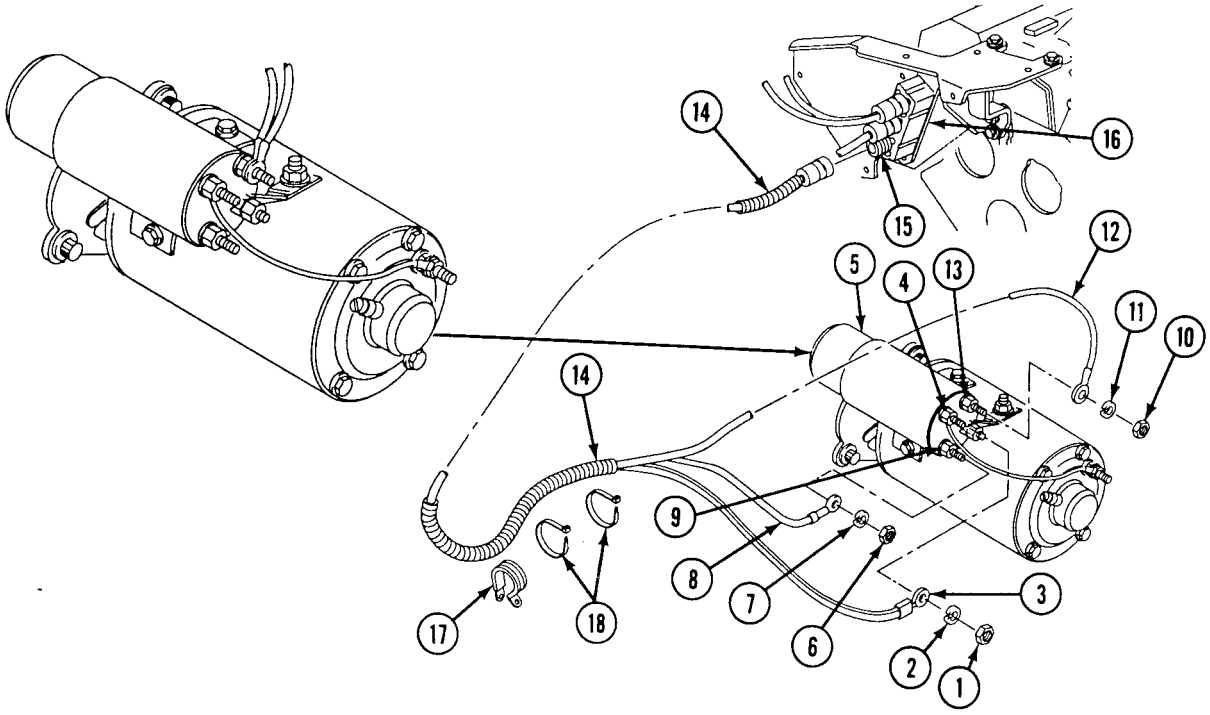

2. REMOVE NUT (6), LOCK WASHER (7), AND ORANGE SWITCH LEAD (8), FROM SWITCH TERMINAL (9) ON SOLENOID (5). DO NOT REMOVE OTHER LEADS. REINSTALL NUT ON SWITCH TERMINAL. DISCARD LOCK WASHER.

3. REMOVE NUT (10), LOCK WASHER (11), AND BLUE GROUND LEAD (12) FROM GROUND TERMINAL (13) ON SOLENOID (5). DO NOT REMOVE OTHER LEADS. REINSTALL NUT ON GROUND TERMINAL. DISCARD LOCK WASHER.
4. DISCONNECT AND REMOVE GLOW PLUG POWER HARNESS (14) FROM LEFT SIDE (15) OF GLOW PLUG CONTROLLER (16).
5. REMOVE CLAMP (17), TWO TIE STRAPS (18), AND GLOW PLUG POWER HARNESS (14) FROM ENGINE. DISCARD TIE STRAPS.

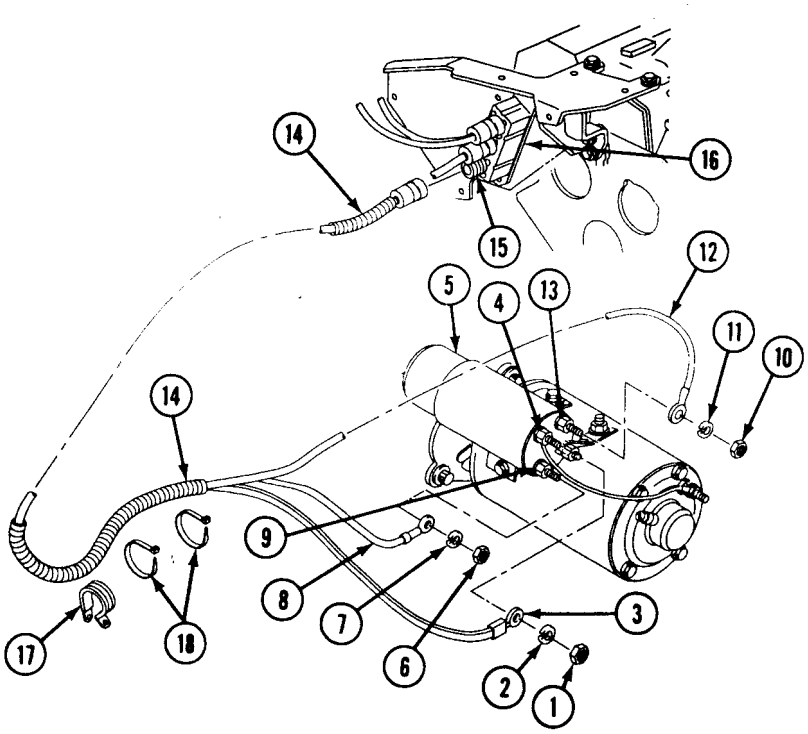

INSTALLATION

1. INSTALL GLOW PLUG POWER HARNESS (14), TWO TIE STRAPS (18), AND CLAMP (17) ON ENGINE.

2. CONNECT GLOW PLUG POWER HARNESS (14) ON LEFT SIDE (15) OF GLOW PLUG CONTROLLER (16).

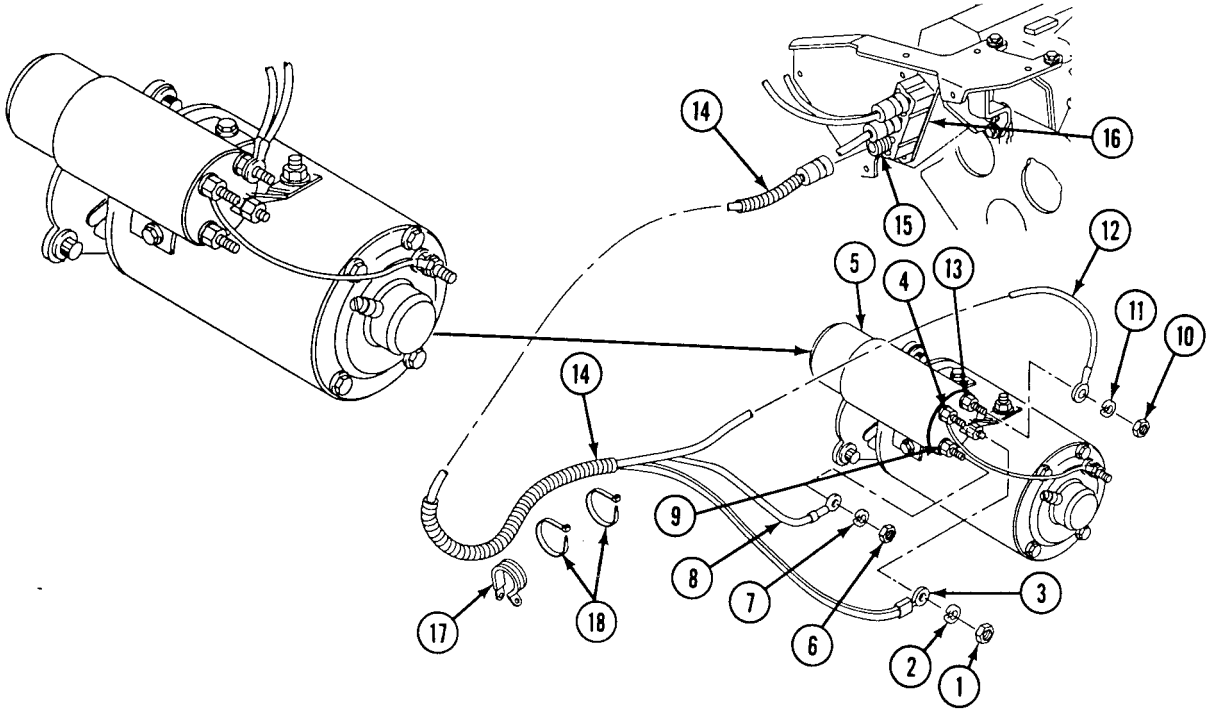

3. REMOVE NUT (10) FROM GROUND TERMINAL (13). INSTALL BLUE GROUND LEAD (12), NEW LOCK WASHER (11), AND NUT ON GROUND TERMINAL.
4. REMOVE NUT (6) FROM SWITCH TERMINAL (9). INSTALL ORANGE SWITCH LEAD (8), NEW LOCK WASHER (7), AND NUT ON SWITCH TERMINAL.

5. REMOVE NUT (1) FROM BATTERY TERMINAL (4). INSTALL RED DOUBLE LEAD (3), NEW LOCK WASHER (2), AND NUT ON BATTERY TERMINAL.

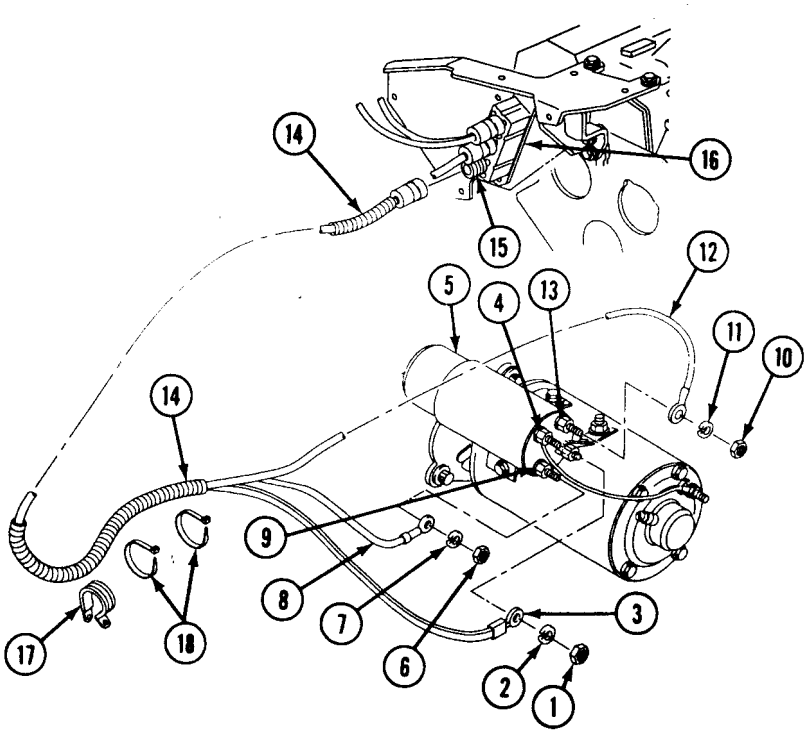

6. CONNECT BATTERY GROUND STRAP (WP 0237 00).
7. INSTALL POWER PLANT REAR ACCESS PANEL (WP 0309 00).
8. INSTALL DRIVER'S POWER PLANT PANEL (WP 0312 00).

END OF TASK

REPLACE GLOW PLUG CONTROLLER MOUNTING BRACKET 0129 00

THIS WORK PACKAGE COVERS:

Removal (page 0129 00-1).
Installation (page 0129 00-2).

INITIAL SETUP:

Maintenance Level
Unit

Tools and Special Tools
General Mechanic's Tool Kit (WP 0397 00, Item 64)
Torque wrench (WP 0397 00, Item 79)
Torque wrench (WP 0397 00, Item 80)

Materials/Parts
Lock washer (4)
Lock washer (2)

Personnel Required
Unit Mechanic 63T10

References
TM 9-2350-366-10-1

Equipment Condition
Engine stopped (TM 9-2350-366-10-1)
Vehicle blocked (TM 9-2350-366-10-1)
Power plant rear engine access panels removed (WP 0309 00)
Battery ground strap disconnected (WP 0237 00)

REMOVAL

1. REMOVE TWO BOLTS (1), LOCKWASHERS (2), NUTS (3), FOUR WASHERS (4), AND GLOW PLUG CONTROLLER (5) FROM MOUNTING BRACKET (6) ON FRONT OF ENGINE. DISCARD LOCKWASHERS.
2. REMOVE TWO SHORT SCREWS (7), LOCKWASHERS (8), AND WASHERS (9) FROM FRONT OF MOUNTING BRACKET (6).
3. REMOVE TWO LONG SCREWS (10), LOCKWASHERS (11), WASHERS (12), SPACERS (13), AND MOUNTING BRACKET (6) FROM ENGINE. DISCARD LOCKWASHERS.

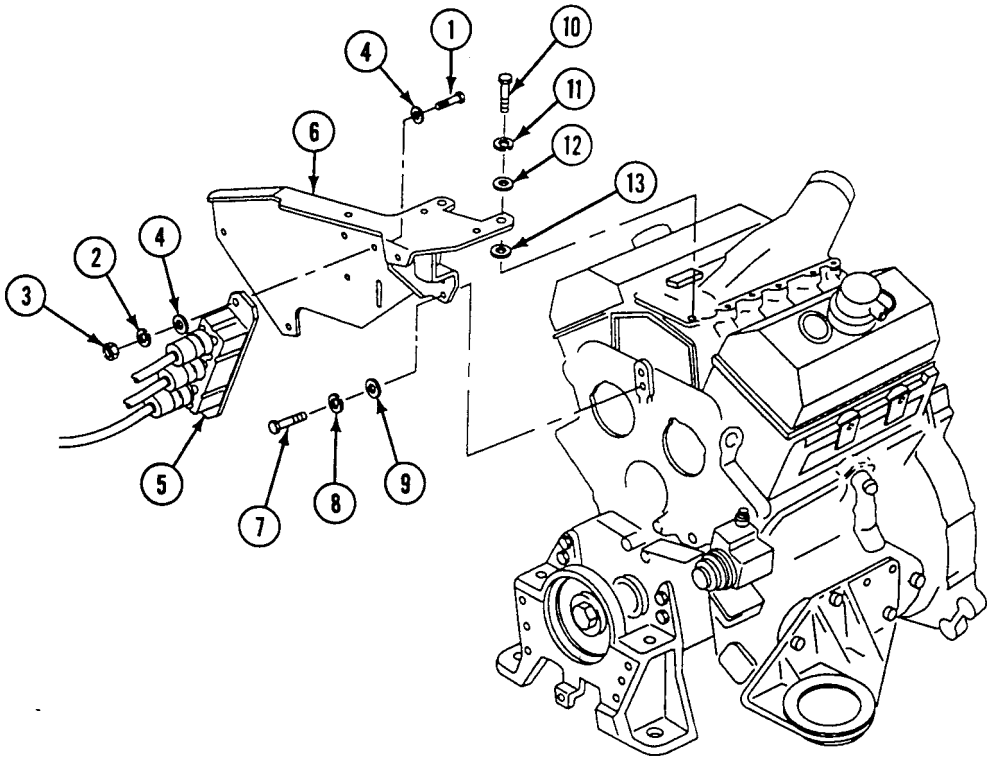

INSTALLATION

1. INSTALL MOUNTING BRACKET (1), TWO SPACERS (2), WASHERS (3), NEW LOCKWASHERS (4), AND LONG SCREWS (5) ON FRONT OF ENGINE. TIGHTEN SCREWS TO 192-240 LB-IN (22-27 N·M) TORQUE. USE TORQUE WRENCH (WP 0397 00, Item 79).
2. INSTALL TWO WASHERS (6), NEW LOCKWASHERS (7), AND SHORT SCREWS (8) INTO FRONT OF MOUNTING BRACKET (1). TIGHTEN SCREWS TO 46-50 LB-FT (62-68 N·M) TORQUE. USE TORQUE WRENCH (WP 0397 00, Item 80).
3. INSTALL GLOW PLUG CONTROLLER (9), FOUR WASHERS (10), TWO NEW LOCKWASHERS (11), BOLTS (12), AND NUTS (13) ON MOUNTING BRACKET (1).

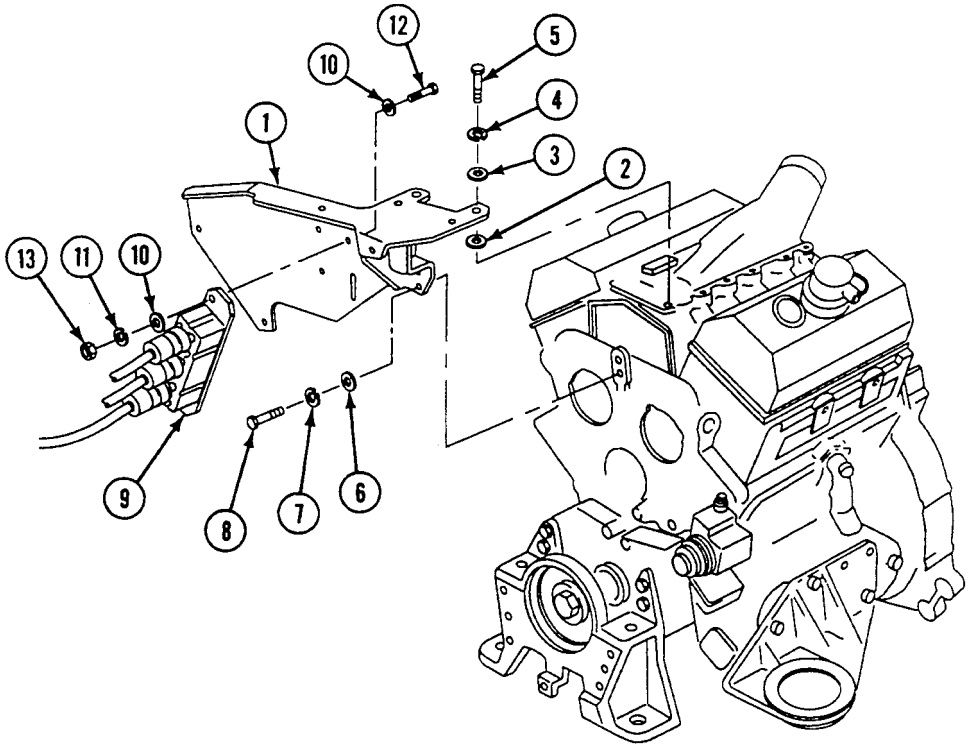

4. CONNECT BATTERY GROUND STRAP (WP 0237 00).
5. INSTALL POWER PLANT REAR ENGINE ACCESS PANELS (WP 0309 00).

END OF TASK

REPLACE ENGINE FUEL SUPPLY HOSE 0130 00

THIS WORK PACKAGE COVERS:

Removal (page 0130 00-1).
Installation (page 0130 00-3).

INITIAL SETUP:

Maintenance Level
Unit

Tools and Special Tools
General Mechanic's Tool Kit (WP 0397 00, Item 64)

Materials/Parts
Sealing compound (WP 0399 00, Item 55)
Suitable container
Tie strap

Personnel Required
Unit Mechanic 63T10
Helper (H)

References
TM 9-2350-366-10-1
TM 9-2350-366-10-2

Equipment Condition
Engine stopped (TM 9-2350-366-10-1)
Vehicle blocked (TM 9-2350-366-10-1)
Power plant rear access panels removed (WP 0309 00)
Driver's compartment access panel removed (WP 0312 00)
Power plant access door opened (WP 0309 00)
Battery ground strap disconnected (WP 0237 00)
Air intake elbow removed (WP 0144 00)
Exhaust elbow removed (WP 0149 00)
VISMOD access panels removed (WP 0307 00)
Turret rotated to 3200 mils to gain access to power plant rear engine access panel (TM 9-2350-366-10-2)

REMOVAL

1. DISCONNECT COUPLER NOSE (1) FROM COUPLER BODY (2).

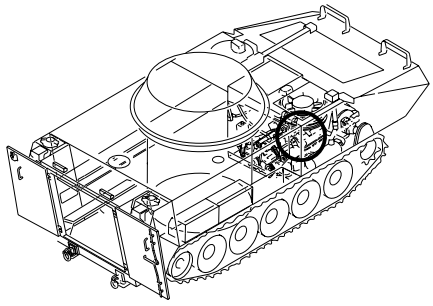

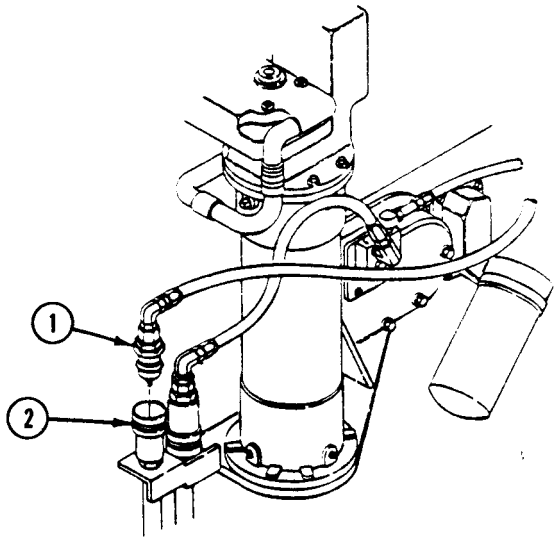

2. REMOVE TIE STRAP (3) FROM FUEL HOSES (4) AND (5). DISCARD STRAP.

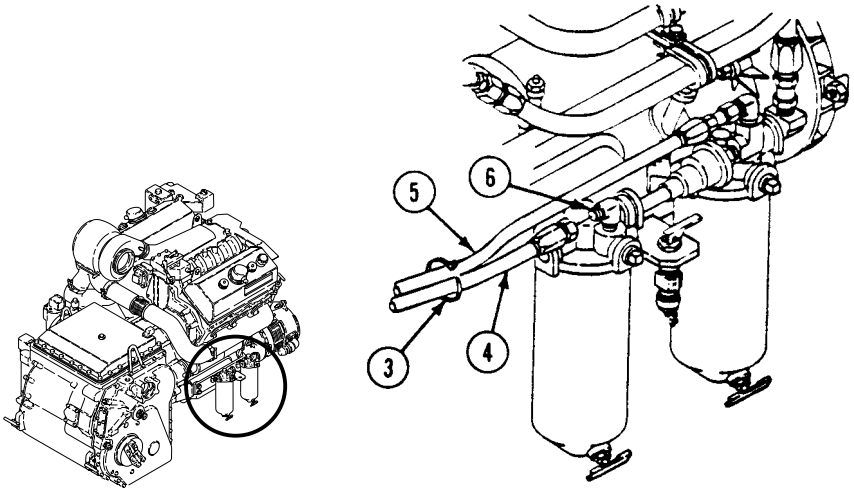

NOTE

Use suitable container to catch fuel leakage.

3. DISCONNECT FUEL SUPPLY HOSE (4) FROM ELBOW (6) ON PRIMARY FUEL FILTER.

NOTE

Note position of fuel supply hose in relation to power plant before removing hose.

4. REMOVE FUEL SUPPLY HOSE (1) FROM CARRIER. HAVE HELPER ASSIST.
5. DISCONNECT FUEL SUPPLY HOSE (1) FROM ELBOW (2) ON COUPLER NOSE (3).

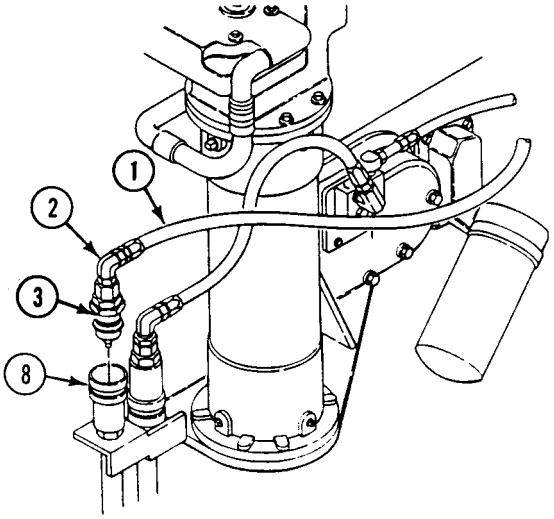

INSTALLATION

NOTE

Do Step 1 before installing fuel supply hose in carrier.

1. CONNECT FUEL SUPPLY HOSE (1) TO ELBOW (2) ON COUPLER NOSE (3). DO NOT INSTALL ON COUPLER BODY (8) AT THIS TIME.

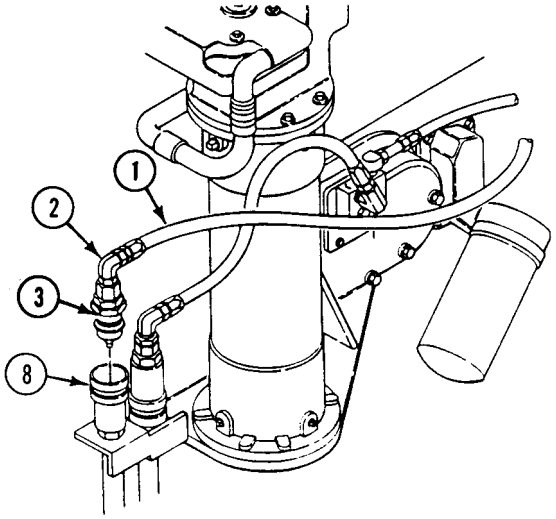

NOTE

Make sure routing of fuel supply hose is the same as it was before removal.

2. INSTALL FUEL SUPPLY HOSE (1) IN CARRIER. HAVE HELPER ASSIST.

3. APPLY SEALING COMPOUND TO THREADS OF ELBOW (4) ON PRIMARY FUEL FILTER (5).

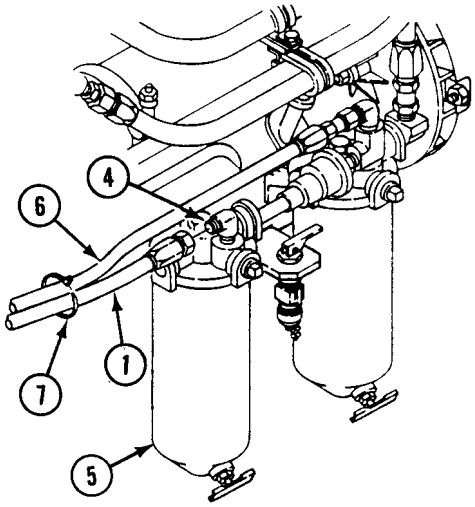

4. CONNECT FUEL SUPPLY HOSE (1) TO ELBOW (4).

5. SECURE FUEL LINES (1) AND (6) WITH NEW TIE STRAP (7).

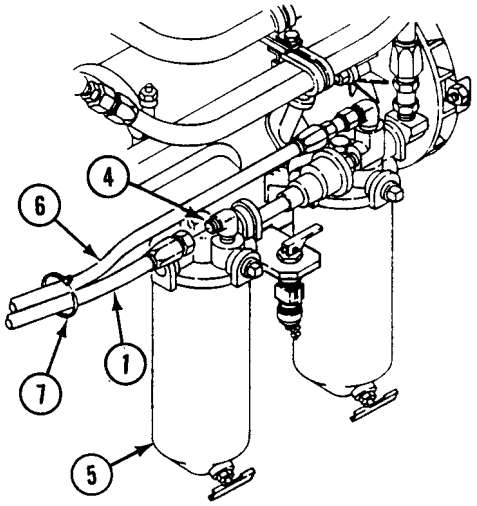

6. CONNECT COUPLER NOSE (1) TO COUPLER BODY (2).

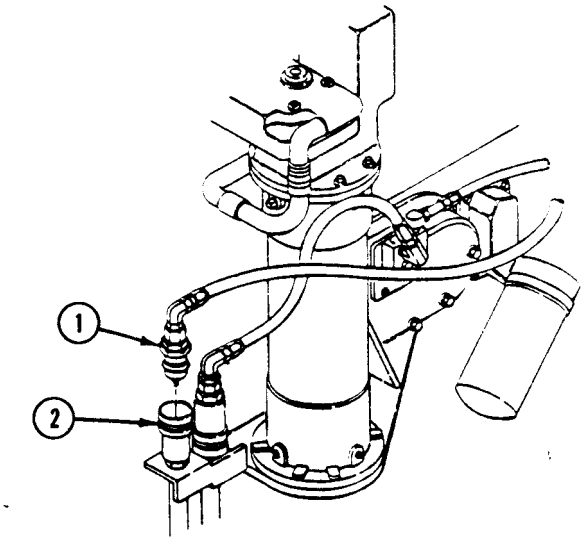

7. INSTALL AIR INTAKE ELBOW (WP 0144 00).
8. CONNECT BATTERY GROUND STRAP (WP 0237 00).
9. START ENGINE. See TM 9-2350-366-10-1. CHECK FOR LEAKS.
10. STOP ENGINE. See TM 9-2350-366-10-1.
11. INSTALL DRIVER'S COMPARTMENT ACCESS PANEL (WP 0312 00).
12. INSTALL POWER PLANT REAR ACCESS PANELS (WP 0309 00).
13. CLOSE POWER PLANT ACCESS DOOR. See TM 9-2350-366-10-1.
14. INSTALL VISMOD ACCESS PANEL (WP 0307 00).
15. INSTALL EXHAUST ELBOW (WP 0149 00).
16. ROTATE TURRET TO 6400 MILS, OR AS NEEDED. See TM 9-2350-366-10-2.

END OF TASK

REPLACE ENGINE FUEL RETURN HOSE 0131 00

THIS WORK PACKAGE COVERS:

Removal (page 0131 00-1).
Installation (page 0131 00-3).

INITIAL SETUP:

Maintenance Level

Unit

Tools and Special Tools

General Mechanic's Tool Kit (WP 0397 00, Item 64)

Personnel Required

Unit Mechanic 63T10

References

TM 9-2350-366-10-1
TM 9-2350-366-10-2

Equipment Condition

Engine stopped TM 9-2350-366-10-1
Vehicle blocked TM 9-2350-366-10-1
Power plant rear access panels removed (WP 0309 00)
Battery ground strap disconnected (WP 0237 00
VISMOD access panel removed (WP 0307 00.

REMOVAL

WARNING

Turret can rotate and severely injure or kill you. Do not reach through turret shield opening when turret power is on. Keep turret shield door closed whenever turret drive power is on. Engage turret travel lock before moving or reaching through turret shield opening.

CAUTION

During rotation driver's hatch must be closed to prevent damage to turret/driver's hatch.

1. ROTATE TURRET 3200 MILS TO ACCESS POWER PLANT REAR ACCESS PANEL. See TM 9-2350-366-10-2.

2. DISCONNECT COUPLER BODY (1) FROM COUPLER NOSE (2).

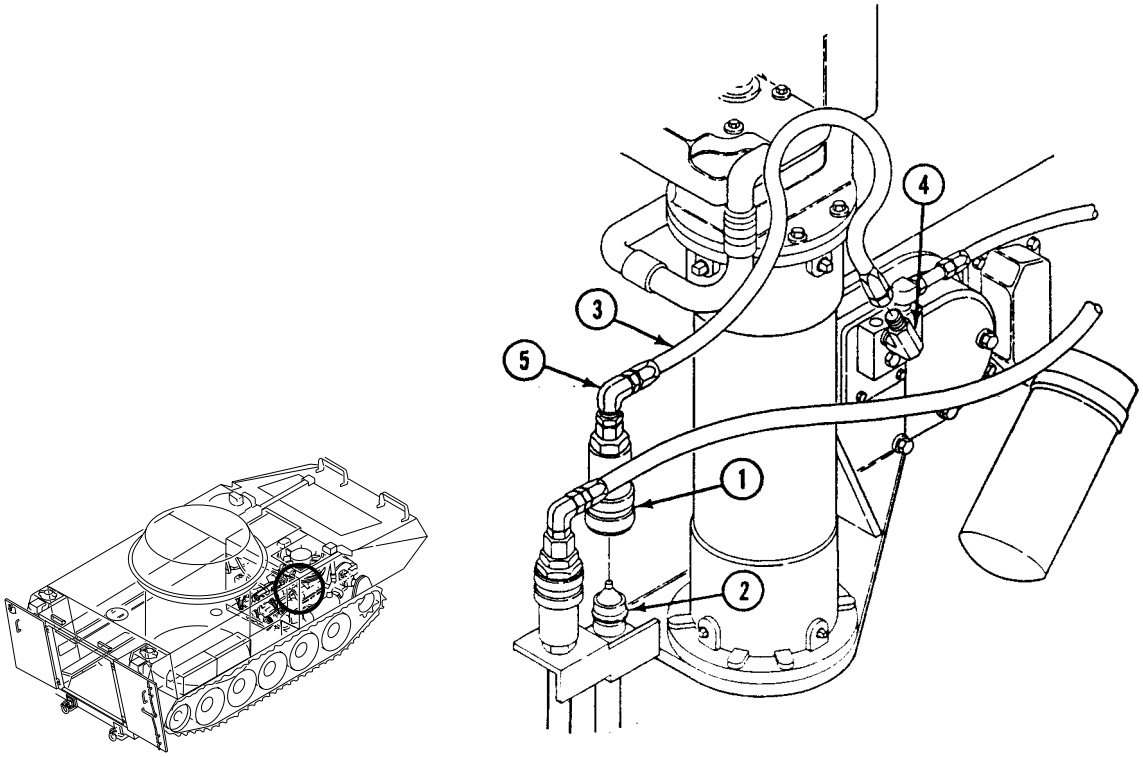

3. DISCONNECT FUEL RETURN HOSE (3) FROM ELBOW (4) ON FUEL MANIFOLD.
4. DISCONNECT FUEL RETURN HOSE (3) FROM ELBOW (5) ON COUPLER BODY (1).

INSTALLATION

1. CONNECT FUEL RETURN HOSE (3) TO ELBOW (5) ON COUPLER BODY (1).

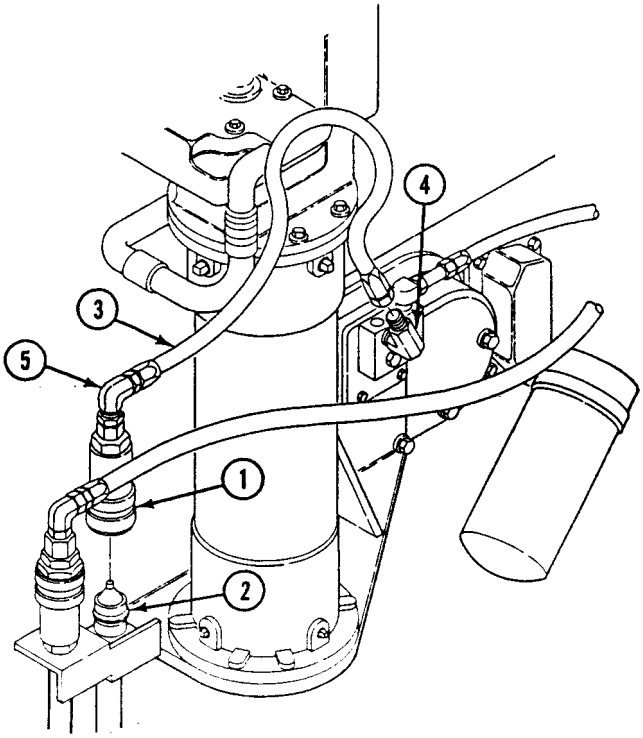

2. CONNECT FUEL RETURN HOSE (3) TO ELBOW (4) ON FUEL MANIFOLD.
3. CONNECT COUPLER BODY (1) TO COUPLER NOSE (2).
4. CONNECT BATTERY GROUND STRAP (WP 0237 00.
5. START ENGINE. See TM 9-2350-366-10-1.
6. CHECK FOR LEAKS.
7. STOP ENGINE. See TM 9-2350-366-10-1.
8. INSTALL POWER PLANT REAR ACCESS PANELS. (WP 0309 00).

WARNING

Turret can rotate and severely injure or kill you. Do not reach through turret shield opening when turret power is on. Keep turret shield door closed whenever turret drive power is on. Engage turret travel lock before moving or reaching through turret shield opening.

CAUTION

During rotation driver's hatch must be closed to prevent damage to turret/driver's hatch.

9. ROTATE TURRET TO 6400 MILS. See TM 9-2350-366-10-2.

END OF TASK

REPLACE PRIMARY AND SECONDARY FUEL FILTERS AND BRACKET 0132 00

THIS WORK PACKAGE COVERS:

Removal (page 0132 00-1).
Installation (page 0132 00-4).

INITIAL SETUP:

Maintenance Level

Unit

Tools and Special Tools

General mechanic's tool kit (WP 0397 00, Item 64)

Materials/Parts

Locknut (4)
Locknut (4)
Sealing compound (WP 0399 00, Item 55)

Personnel Required

Unit Mechanic 63T10

References

TM 9-2350-366-10-1

Equipment Condition

Vehicle blocked (TM 9-2350-366-10-1)
Engine stopped (TM 9-2350-366-10-1)
Rear personnel doors opened (TM 9-2350-366-10-1)
MASTER switch OFF (TM 9-2350-366-10-1)
Driver's power plant access panel removed (TM 9-2350-366-10-1)
Engine AOAP valve removed (WP 0113 00)
Starter relay switch removed (WP 0256 00)
Fuel tank shutoff valves closed (TM 9-2350-366-10-1)

REMOVAL

NOTE

Install covers on disconnected fuel lines, tubes, valves, and components during maintenance. Use tape, cloth, cardboard, or any appropriate material to prevent damage to components or accidental fuel spills.

1. REMOVE HOSES (14) AND (15) FROM TWO ELBOWS (16) AND (17).
2. REMOVE HOSES (10) AND (11) FROM TWO ADAPTERS (12) AND (13).

3. DISCONNECT LEAD (8) FROM SWITCH (9).

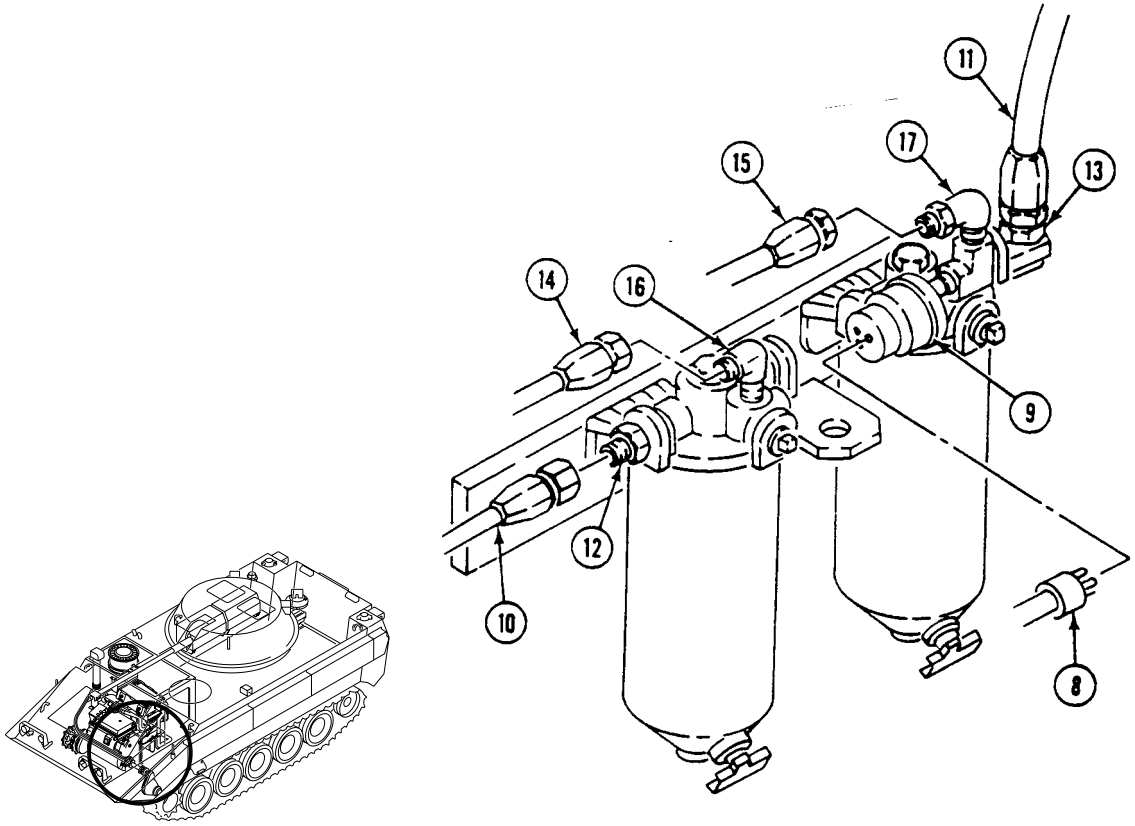

4. REMOVE SCREW (1), TWO WASHERS (2), AND CLAMP (3) FROM BRACKET (4).

5. REMOVE FOUR SCREWS (5), WASHERS (6), LOCKNUTS (7), AND BRACKET (4) FROM ENGINE. DISCARD LOCKNUTS.

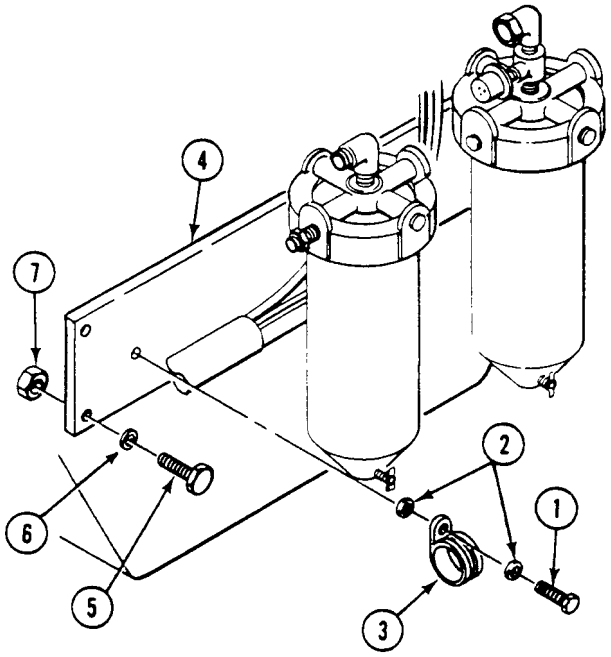

6. REMOVE FOUR SCREWS (8), WASHERS (9), LOCKNUTS (10), AND FILTERS (11) FROM BRACKET (4). DISCARD LOCKNUTS.
7. REMOVE ELBOW (12) AND ADAPTER (13) FROM FILTER HOUSING (14).

8. REMOVE TWO ELBOWS (15) AND (16), TEE (17), AND ADAPTER (18) FROM FILTER HOUSING (19).

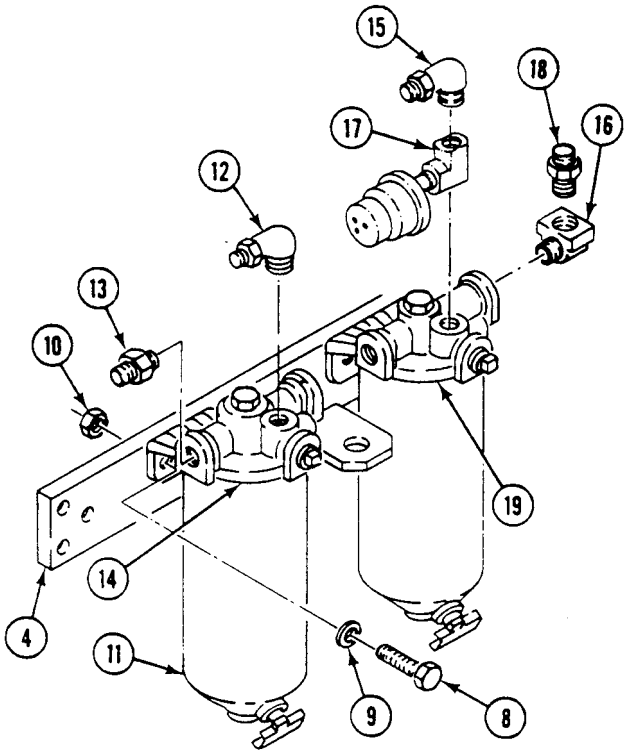

INSTALLATION

1. APPLY THIN COAT OF SEALING COMPOUND TO MALE TAPERED THREADS.
2. INSTALL TWO ELBOWS (15) AND (16), TEE (17), AND ADAPTER (18) ON SECONDARY FILTER HOUSING (19).
3. INSTALL ELBOW (12) AND ADAPTER (13) ON PRIMARY FILTER HOUSING (14).

4. INSTALL FILTERS (11) ON BRACKET (4). SECURE WITH FOUR SCREWS (8), WASHERS (9), AND NEW LOCKNUTS (10).

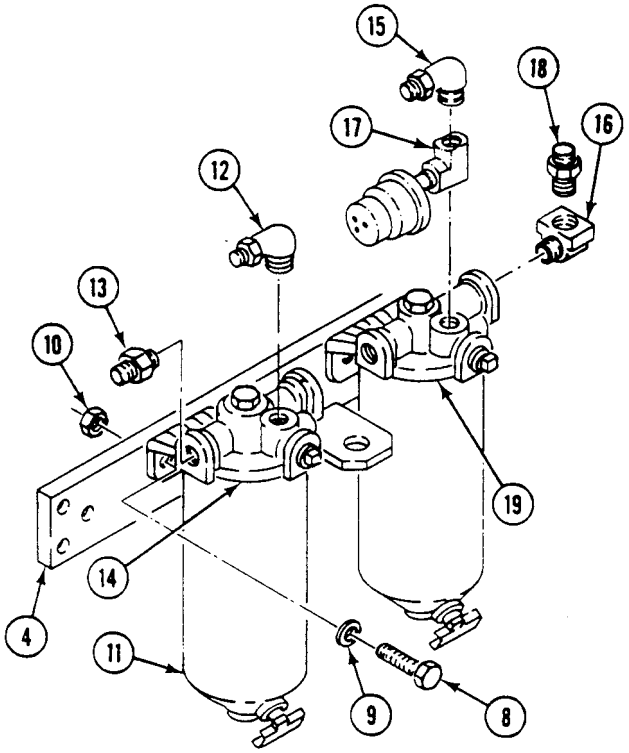

5. INSTALL BRACKET (1) ON ENGINE WITH FOUR SCREWS (2), WASHERS (3), AND NEW LOCKNUTS (4).

6. INSTALL CLAMP (5) ON BRACKET (1) WITH SCREW (6) AND TWO WASHERS (7).

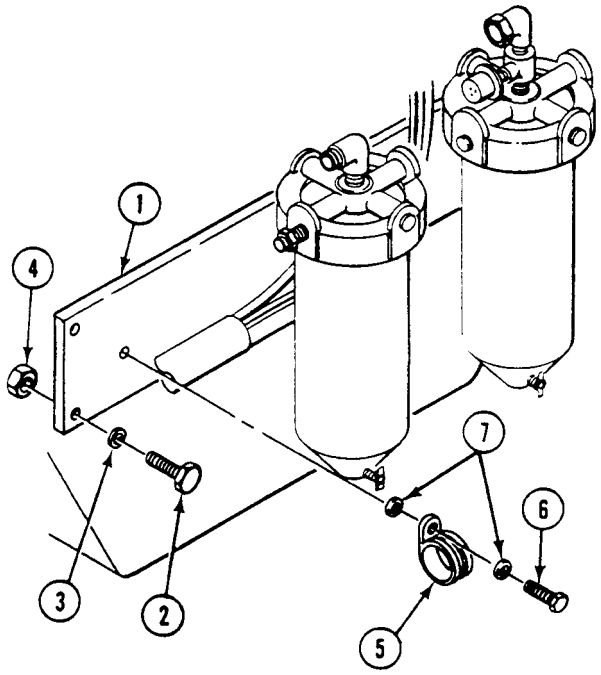

7. CONNECT LEAD (8) TO SWITCH (9).
8. INSTALL HOSES (10) AND (11) ON TWO ADAPTERS (12) AND (13).

9. INSTALL HOSES (14) AND (15) ON TWO ELBOWS (16) AND (17).

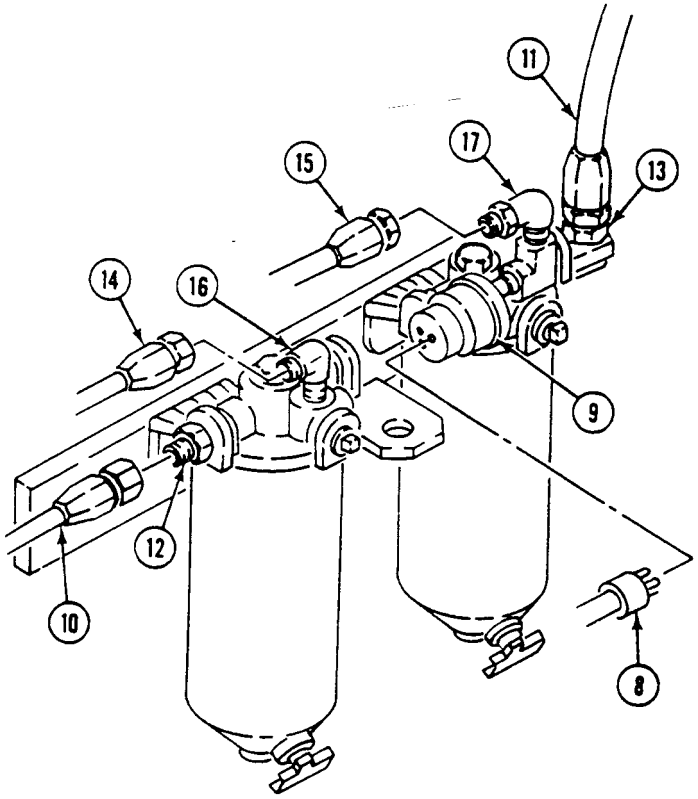

10. OPEN FUEL TANK SHUTOFF VALVES. See TM 9-2350-366-10-1
11. INSTALL ENGINE AOAP VALVE (WP 0113 00).
12. INSTALL STARTER RELAY SWITCH (WP 0256 00).
13. INSTALL DRIVER'S POWER PLANT ACCESS PANEL. SeeTM 9-2350-366-10-1.
14. CLOSE AND LOCK REAR PERSONNEL DOORS. See TM 9-2350-366-10-1.
15. STOP ENGINE. See TM 9-2350-366-10-1.
16. TURN MASTER SWITCH OFF. See TM 9-2350-366-10-1.

END OF TASK

REPLACE PRIMARY AND SECONDARY FUEL FILTER ELEMENTS 0133 00

THIS WORK PACKAGE COVERS:

Removal (page 0133 00-1).
Installation (page 0133 00-2).

INITIAL SETUP:

Maintenance Level
Unit

Tools and Special Tools
General mechanic's tool kit (WP 0397 00, Item 64)

Materials/Parts
Gasket (2)
Container (quart)

Personnel Required
Unit Mechanic 63T10

References
TM 9-2350-366-10-1

Equipment Condition
Engine stopped (TM 9-2350-366-10-1)
Vehicle blocked (TM 9-2350-366-10-1)
Driver's power plant access panel removed (WP 0312 00)
Fuel supply and return valves turned off (TM 9-2350-366-10-1)

REMOVAL

NOTE

Primary and secondary filter elements are removed and installed the same way. Only the elements are different.

1. PLACE CONTAINER UNDER DRAIN COCK (1). OPEN DRAIN COCK AND DRAIN FUEL FROM FUEL FILTER. CLOSE DRAIN COCK.
2. HOLD FILTER CANISTER (2) AND REMOVE SCREW (3) AND WASHER (4) SECURING CANNISTER FROM FILTER HEAD (5).
3. REMOVE FILTER CANISTER (2) AND FILTER ELEMENT (6) OR (7) FROM FILTER HEAD (5). DISCARD FILTER ELEMENT. WIPE CANISTER CLEAN.
4. REMOVE GASKET (8) FROM FILTER HEAD (5). DISCARD GASKET.

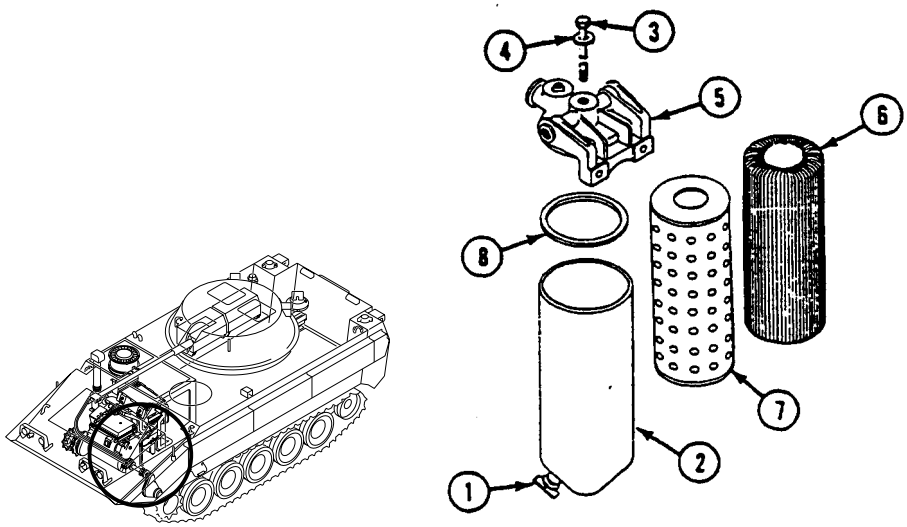

INSTALLATION

1. INSTALL NEW GASKET (8) IN FILTER HEAD (5).
2. INSTALL NEW FILTER ELEMENT (6) OR (7) IN CANISTER (2). FILL CANISTER WITH FUEL.

NOTE

Do not allow canister to turn when tightening screw. Damage to gasket can result.

3. INSTALL CANISTER (2) WITH FILTER ELEMENT (6) OR (7) ON FILTER HEAD (5) WITH WASHER (4) AND SCREW (3).

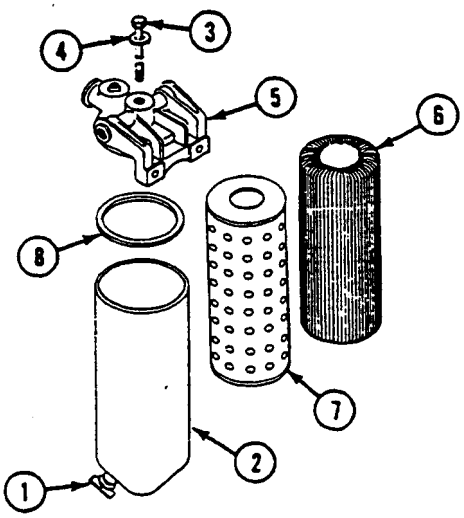

4. TURN FUEL SUPPLY AND RETURN VALVES ON. See TM 9-2350-366-10-1.
5. START ENGINE. See TM 9-2350-366-10-1. CHECK FOR LEAKS. STOP ENGINE. See TM 9-2350-366-10-1.
6. INSTALL DRIVER'S COMPARTMENT POWER PLANT ACCESS PANEL (WP 0312 00).

END OF TASK

REPLACE FUEL SUPPLY PRESSURE TRANSDUCER 0134 00

THIS WORK PACKAGE COVERS:

Removal (page 0134 00-1).
Installation (page 0134 00-1).

INITIAL SETUP:

Maintenance Level

Unit

Tools and Special Tools

General mechanic's tool kit (WP 0397 00, Item 64)

Materials/Parts

Adhesive (WP 0399 00, Item 4)

Personnel Required

Unit Mechanic 63T10

References

TM 9-2350-366-10-1

Equipment Condition

Engine stopped (TM 9-2350-366-10-1)
Vehicle blocked (TM 9-2350-366-10-1)
Driver's power plant access panel removed (WP 0312 00)
Power plant rear access panels removed (WP 0309 00)

REMOVAL

1. DISCONNECT FUEL SUPPLY PRESSURE TRANSDUCER LEAD (1) FROM WIRING HARNESS (2).
2. REMOVE TRANSDUCER (3) FROM FITTING (4).

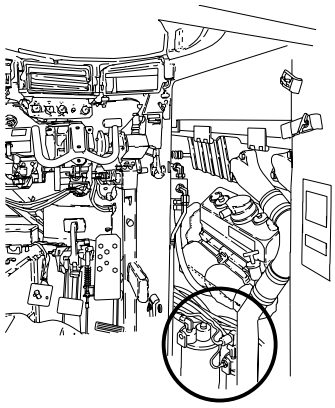

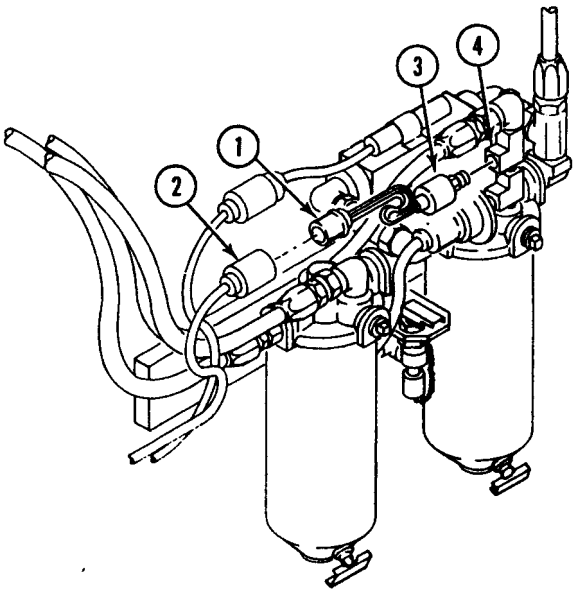

INSTALLATION

1. APPLY A THIN COAT OF ADHESIVE TO THREADS OF TRANSDUCER (3).
2. INSTALL TRANSDUCER (3) ON FITTING (4).

REPLACE FUEL SUPPLY PRESSURE TRANSDUCER — Continued **0134 00**

3. CONNECT FUEL SUPPLY PRESSURE TRANSDUCER LEAD (1) TO WIRING HARNESS (2).

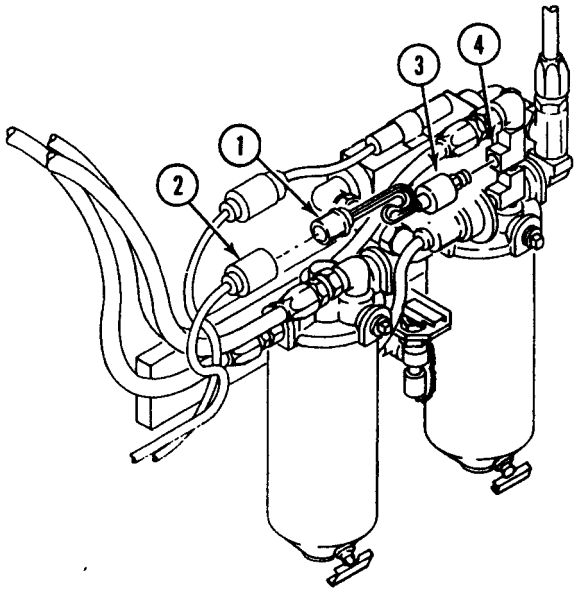

4. INSTALL DRIVER'S COMPARTMENT ACCESS PANEL (WP 0312 00)

END OF TASK

REPLACE FUEL RETURN PRESSURE TRANSDUCER 0135 00

THIS WORK PACKAGE COVERS:

Removal (page 0135 00-1).
Installation (page 0135 00-2).

INITIAL SETUP:

Maintenance Level

Unit

Tools and Special Tools

General mechanic's tool kit (WP 0397 00, Item 64)

Materials/Parts

Adhesive (WP 0399 00, Item 4)

Personnel Required

Unit Mechanic 63T10

References

TM 9-2350-366-10-1

Equipment Condition

Engine stopped (TM 9-2350-366-10-1)
Vehicle blocked (TM 9-2350-366-10-1)
Front VISMOD access doors removed (WP 0307 00)
Engine access cover plate removed (WP 0308 00)
Air cleaner removed (WP 0139 00)
Power plant grill removed (WP 0335 00)

REMOVAL

1. DISCONNECT FUEL RETURN PRESSURE TRANSDUCER LEAD (1) FROM STE/ICE WIRING HARNESS (2).

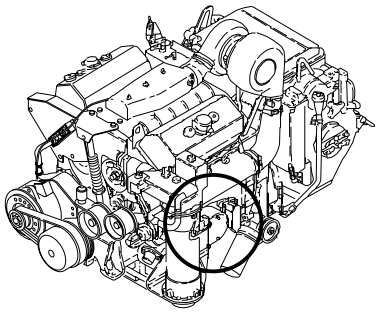

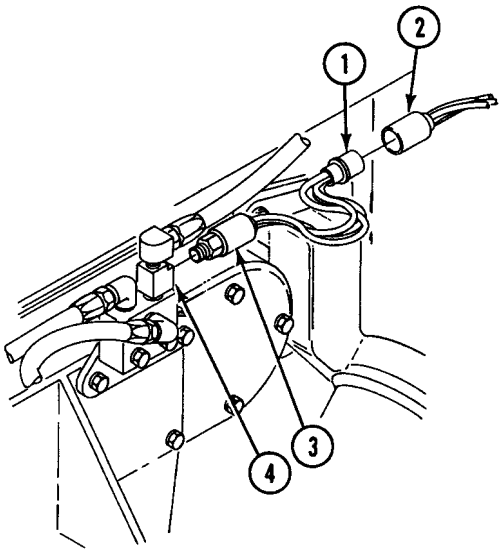

2. DISCONNECT TRANSDUCER (3) FROM TEE (4).

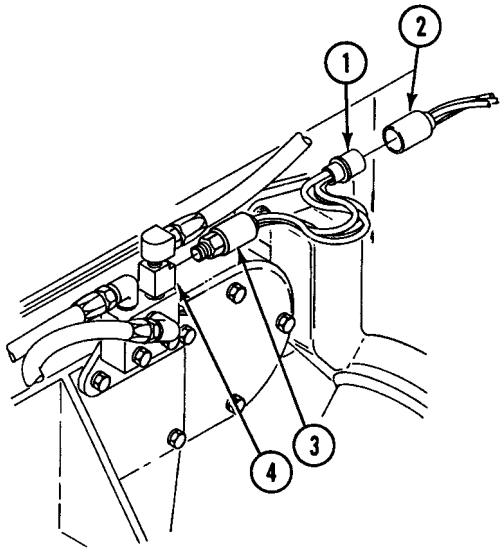

INSTALLATION

1. APPLY A THIN COAT OF ADHESIVE TO THREADS OF TRANSDUCER (3).

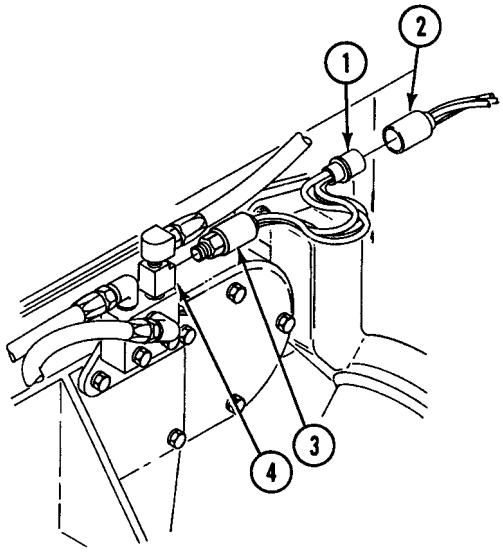

2. CONNECT TRANSDUCER (3) TO TEE (4).

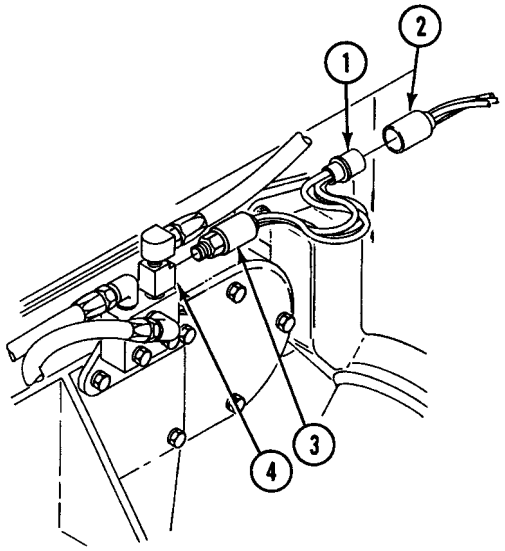

3. CONNECT FUEL RETURN PRESSURE TRANSDUCER LEAD (1) TO STE/ICE WIRING HARNESS (2).

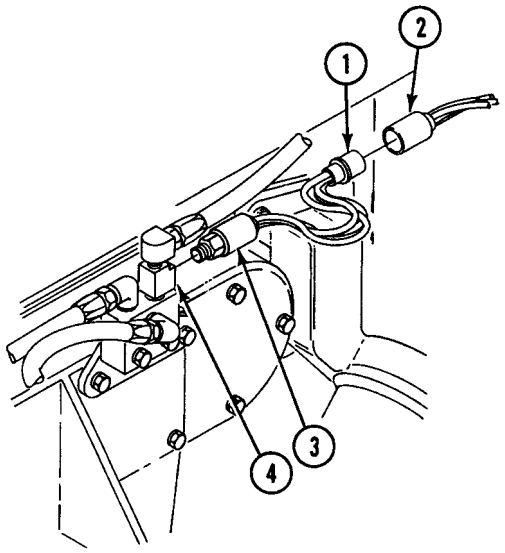

4. INSTALL POWER PLANT GRILL (WP 0335 00).

5. INSTALL AIR CLEANER (WP 0139 00).

6. INSTALL ENGINE ACCESS COVER PLATE WP 0049 00.

7. INSTALL VISMOD PANELS(WP 0307 00).

END OF TASK

REPLACE FUEL FILTER DIFFERENTIAL PRESSURE SWITCH 0136 00

THIS WORK PACKAGE COVERS:

Removal (page 0136 00-1).
Installation (page 0136 00-5).

INITIAL SETUP:

Maintenance Level
Unit

Tools and Special Tools
General mechanic's tool kit (WP 0397 00, Item 64)

Materials/Parts
Adhesive (WP 0399 00, Item 4)
Gasket
Locknut (2)
Lockwasher (2)

Personnel Required
Unit Mechanic 63T10

References
TM 9-2350-366-10-1

Equipment Condition
Engine stopped (TM 9-2350-366-10-1)
Vehicle blocked (TM 9-2350-366-10-1)
Battery ground strap disconnected (WP 0237 00)
Power plant rear access panel removed (WP 0309 00)
Driver's compartment access panel removed (TM 9-2350-366-10-1)

REMOVAL

1. DISCONNECT FUEL SUPPLY HOSE (1) AT QUICK DISCONNECT FITTING (2).
2. DISCONNECT FUEL RETURN HOSE (3) AT QUICK DISCONNECT FITTING (4).

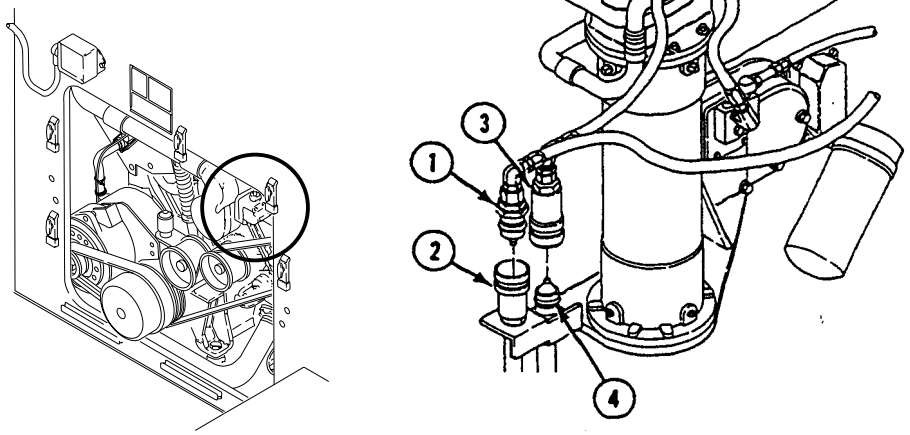

3. DISCONNECT FUEL PRESSURE TRANSDUCER LEAD (3) FROM WIRING HARNESS (4).

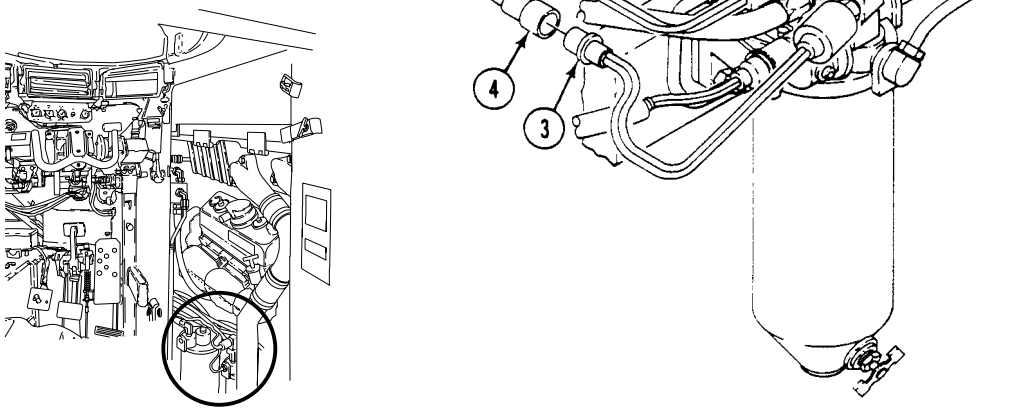

4. DISCONNECT DIFFERENTIAL PRESSURE SWITCH LEAD (1) FROM WIRING HARNESS (2).

5. DISCONNECT FIELD SWITCH LEAD (1) FROM FIELD SWITCH (2). REMOVE FIELD SWITCH FROM ELBOW (3).

6. REMOVE FUEL TUBE (4) FROM FILTER INLET ELBOW (5) AND FILTER DIFFERENTIAL PRESSURE SWITCH ELBOW (6).

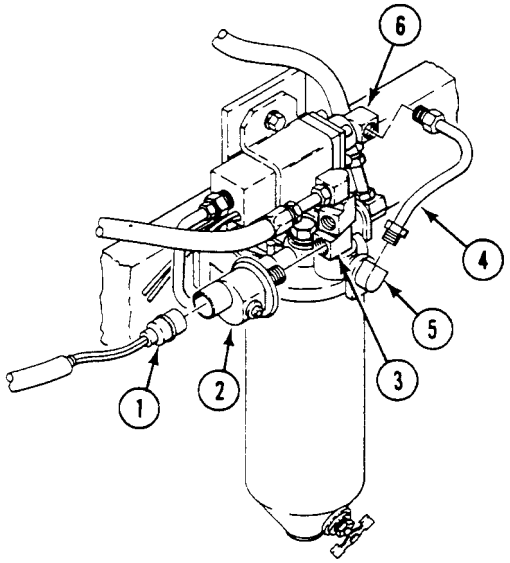

7. DISCONNECT HOSE (7) FROM FUEL FILTER OUTLET ELBOW (8).

8. DISCONNECT HOSE (9) FROM FUEL FILTER ELBOW (10).

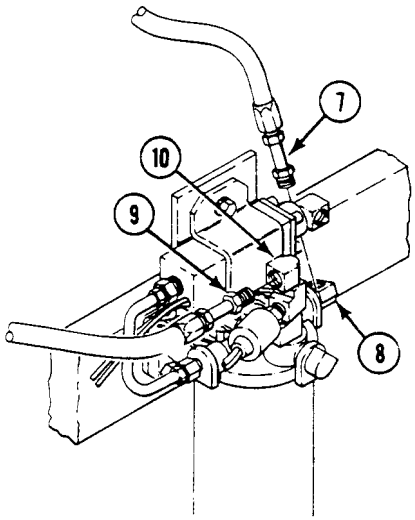

9. REMOVE TUBE (11) FROM FUEL FILTER OUTLET ADAPTER (12) AND FILTER DIFFERENTIAL PRESSURE SWITCH ADAPTER (13).

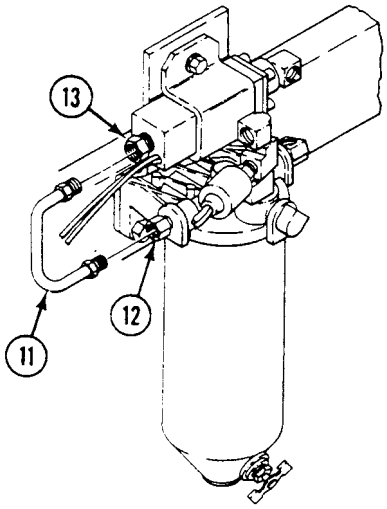

10. PLACE CONTAINER UNDER DRAIN COCK (14). OPEN DRAIN COCK AND DRAIN FUEL. CLOSE DRAIN COCK.

11. HOLD FILTER CANISTER (15). LOOSEN SCREW (16). REMOVE CANISTER AND FILTER ELEMENT (17) FROM FILTER HEAD (18).

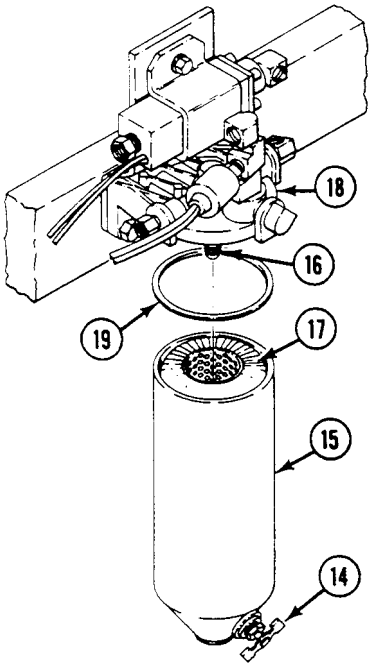

12. REMOVE GASKET (19) FROM FILTER HEAD (18). DISCARD GASKET.
13. REMOVE TWO SCREWS (1), FOUR WASHERS (2), TWO LOCKNUTS (3), FILTER HEAD (4) AND DIFFERENTIAL PRESSURE SWITCH BRACKET (5) FROM ENGINE. DISCARD LOCKNUTS.

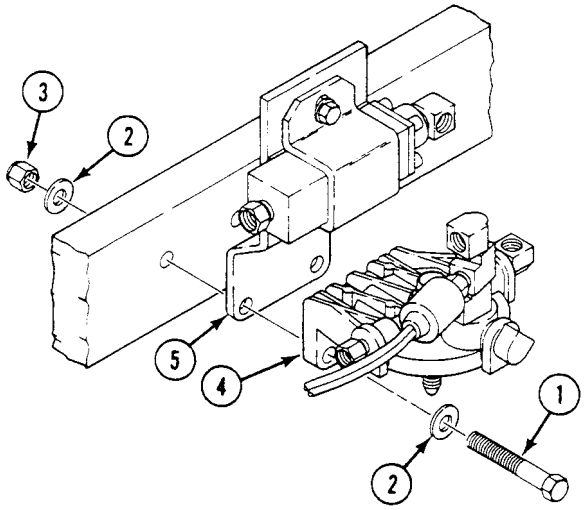

14. CLAMP DIFFERENTIAL PRESSURE SWITCH BRACKET (5) IN VISE. REMOVE ADAPTER (6) AND ELBOW (7) FROM PRESSURE SWITCH (8).

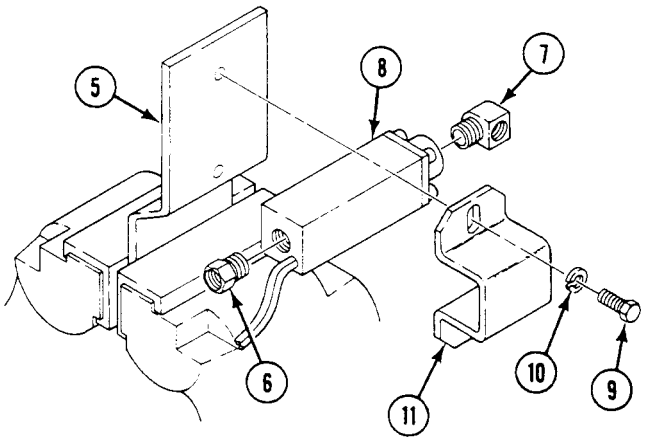

15. REMOVE TWO SCREWS (9), LOCKWASHERS (10), SUPPORT (11) AND DIFFERENTIAL PRESSURE SWITCH (8) FROM BRACKET (5). DISCARD LOCKWASHERS.

INSTALLATION

1. CLAMP BRACKET (5) IN VISE. INSTALL DIFFERENTIAL PRESSURE SWITCH (8) AND SUPPORT (11) ON BRACKET WITH TWO SCREWS (9) AND NEW LOCKWASHERS (10).
2. APPLY THIN COAT OF ADHESIVE TO EXTERNAL THREADS OF FITTINGS.
3. INSTALL ADAPTER (6) AND ELBOW (7) ON DIFFERENTIAL PRESSURE SWITCH (8).

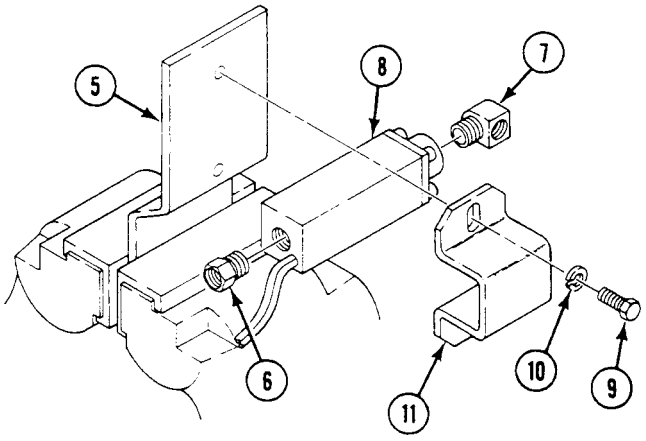

4. INSTALL SWITCH BRACKET (5) AND FILTER HEAD (4) ON ENGINE WITH TWO SCREWS (1), FOUR WASHERS (2), AND TWO NEW LOCKNUTS (3).

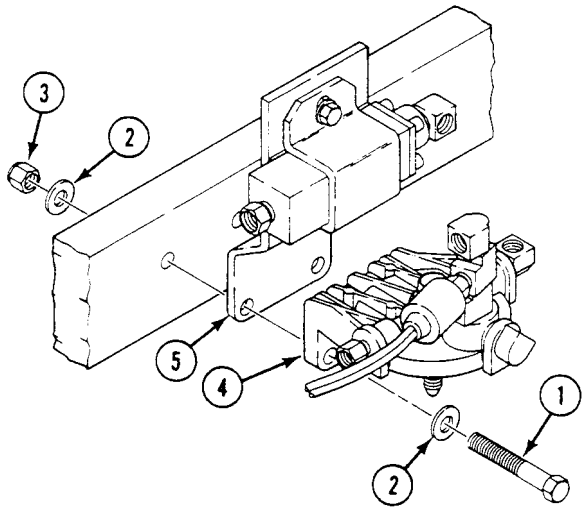

5. INSTALL NEW GASKET (1) ON FILTER HEAD (2).
6. INSTALL FILTER CANISTER (3) WITH FILTER ELEMENT (4) ON FILTER HEAD (2). TIGHTEN SCREW (5).

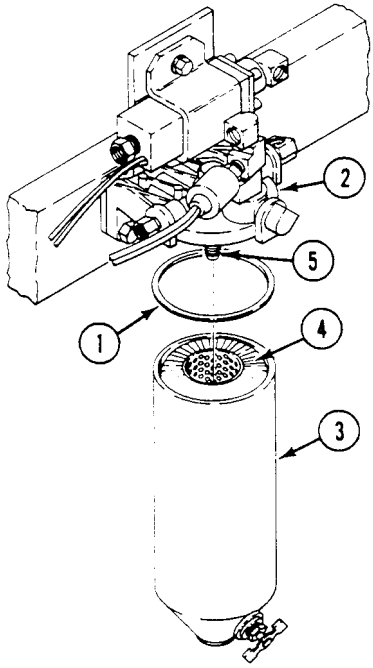

7. INSTALL TUBE (6) ON FUEL FILTER OUTLET ADAPTER (7) AND FILTER DIFFERENTIAL PRESSURE SWITCH ADAPTER (8).

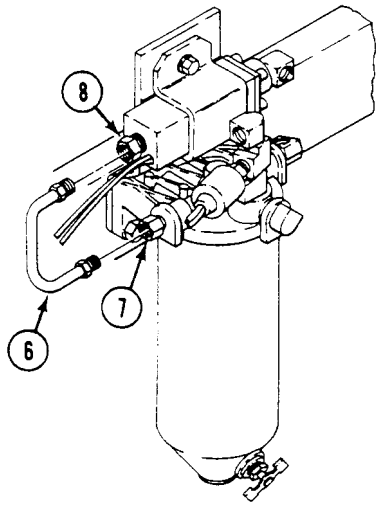

8. CONNECT HOSE (9) TO FUEL FILTER ELBOW (10).
9. CONNECT HOSE (11) TO FUEL FILTER OUTLET ELBOW (12).

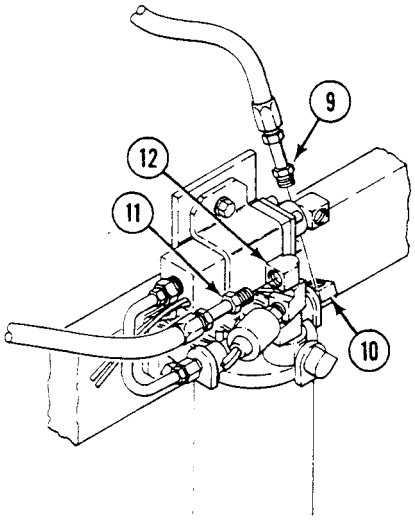

10. INSTALL TUBE (13) ON FILTER INLET ELBOW (14) AND FILTER DIFFERENTIAL PRESSURE SWITCH ELBOW (15).
11. APPLY A THIN COAT OF ADHESIVE TO EXTERNAL THREADS OF FIELD SWITCH (16).

12. INSTALL FIELD SWITCH (16) ON ELBOW (17). CONNECT LEAD (18) TO FIELD SWITCH.

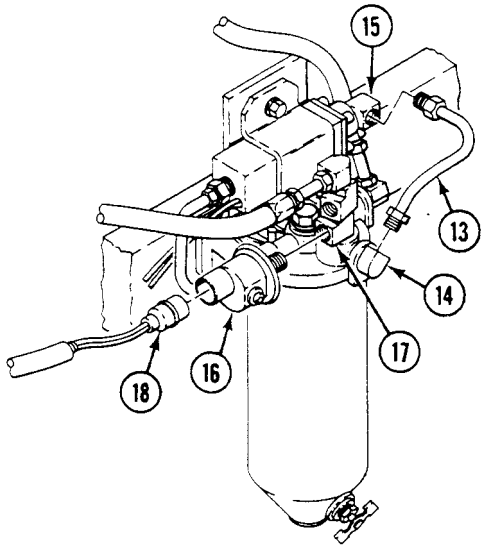

13. CONNECT DIFFERENTIAL PRESSURE SWITCH LEAD (1) TO WIRING HARNESS (2).
14. CONNECT FUEL PRESSURE TRANSDUCER LEAD (3) TO WIRING HARNESS (4).

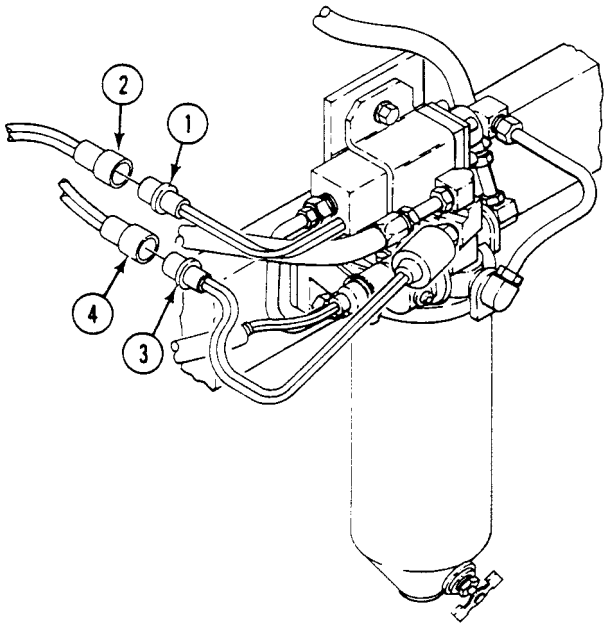

15. CONNECT FUEL SUPPLY HOSE (1) AT QUICK DISCONNECT FITTING (2).

16. CONNECT FUEL RETURN HOSE (3) AT QUICK DISCONNECT FITTING (4).

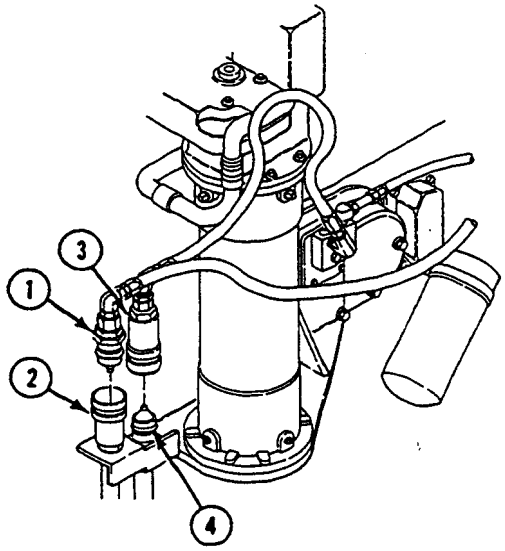

17. INSTALL DRIVER'S COMPARTMENT ACCESS PANEL. SEE (TM 9-2350-366-10-1).
18. INSTALL POWER PLANT REAR ACCESS PANEL (WP 0309 00).
19. CONNECT BATTERY GROUND STRAP (WP 0237 00).

END OF TASK

REPLACE GOVERNOR ASSEMBLY 0137 00

THIS WORK PACKAGE COVERS:

Removal (page 0137 00-1).
Installation (page 0137 00-1).

INITIAL SETUP:

Maintenance Level

Unit

Tools and Special Tools

General mechanic's tool kit (WP 0397 00, Item 64)
Torque wrench, 3/8 inch drive, 15–75 ft-lb

Materials/Parts

Gasket
Self-locking bolt (4)

Personnel Required

Unit Mechanic 63T10

References

TM 9-2350-366-10-1

Equipment Condition

Engine stopped (TM 9-2350-366-10-1)
Vehicle blocked (TM 9-2350-366-10-1)
Power plant access panel removed (TM 9-2350-366-10-1)
VISMOD assembly removed (WP 0307 00)
Power plant removal (WP 0106 00)

REMOVAL

1. REMOVE FOUR SELF-LOCKING BOLTS (5) AND WASHERS (4) FROM BRAKE ADJUSTMENT COVER (3). REMOVE COVER (3) AND GASKET (2) FROM REAR OF TRANSMISSION. DISCARD GASKET AND BOLTS.

2. REMOVE GOVERNOR ASSEMBLY (1) FROM TRANSMISSION. NO REPAIR IS AUTHORIZED. REPLACE DEFECTIVE GOVERNOR.

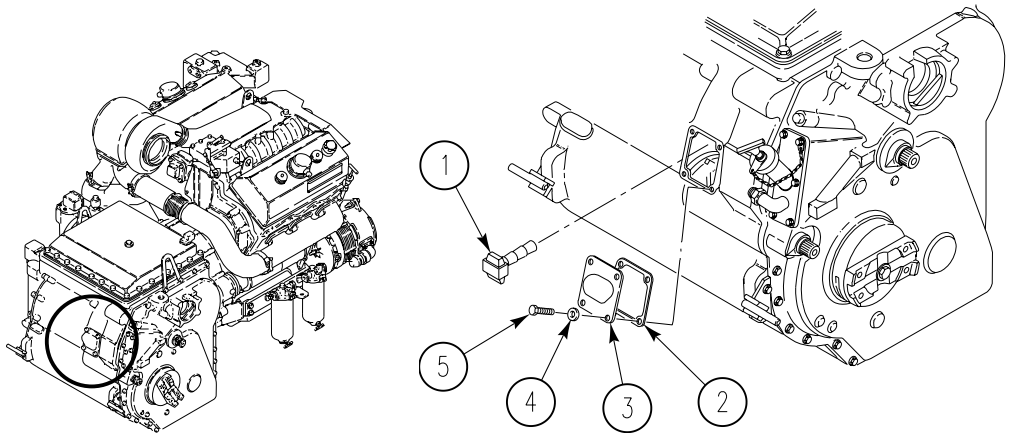

INSTALLATION

1. INSTALL NEW GOVERNOR ASSEMBLY (1) IN TRANSMISSION. TWIST GOVERNOR SLIGHTLY TO THE RIGHT WHILE INSERTING IT INTO BORE INSIDE TRANSMISSION.

2. INSTALL COVER (3) AND NEW GASKET (2) ON TRANSMISSION. SECURE WITH FOUR WASHERS (4) AND NEW SELF-LOCKING BOLTS (5).

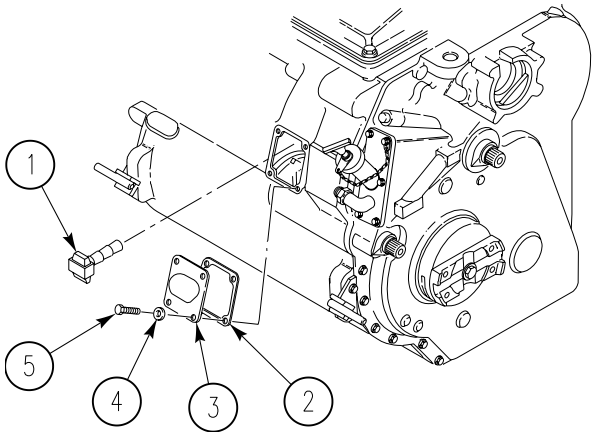

   a. TORQUE BOLTS (5) TO 13–15 FT-LB (18–20 N·m).

3. INSTALL POWER PLANT ASSEMBLY (WP 0106 00).

4. INSTALL VISMOD ASSEMBLY (WP 0307 00)

5. INSTALL POWER PLANT ACCESS PANEL. See TM 9-2350-366-10.

END OF TASK

CHAPTER 6

UNIT MAINTENANCE INSTRUCTIONS FOR AIR CLEANER

WORK PACKAGE INDEX

Title	Sequence No.
SERVICE AIR CLEANER FILTER ELEMENT	0138 00
REPLACE AIR CLEANER AND ELBOW	0139 00
REPAIR AIR CLEANER ASSEMBLY	0140 00
REPAIR AIR CLEANER RETAINER	0141 00
REPLACE AIR CLEANER RESTRICTION INDICATOR	0142 00
REPLACE AIR CLEANER RESTRICTION INDICATOR HOSE	0143 00
REMOVE/INSTALL AIR INTAKE ELBOW	0144 00
REPLACE GRILL AIR INTAKE ELBOW AND HOSE	0145 00
REPLACE EXHAUST EVACUATOR VALVE AND CONNECTOR	0146 00
ADJUST VENTILATING FAN DRIVE BELT	0147 00
REPLACE VENTILATING FAN DRIVE BELT	0148 00

SERVICE AIR CLEANER FILTER ELEMENT 0138 00

THIS WORK PACKAGE COVERS:

Service (page 0138 00-1).

INITIAL SETUP:

Maintenance Level

Unit

Tools and Special Tools

General Mechanic's Tool Kit (WP 0397 00, Item 64)
Suitable container

Materials/Parts

Detergent (WP 0399 00, Item 33)

Personnel Required

Unit Mechanic 63T10

References

See your -10

Equipment Condition

Engine stopped (TM 9-2350-366-10-1)

Vehicle blocked (TM 9-2350-366-10-1)

Air cleaner element removed (TM 9-2350-366-10-1)

SERVICING

WARNING

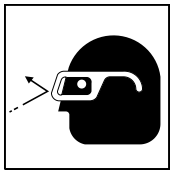

Compressed air can injure you or others.

Do not aim compressed air at yourself or other personnel. Always wear goggles when working with compressed air. Do not use more pressure than 30 psi (207kPa) with air nozzles.

NOTE

Cleaning element Vee Pac may be cleaned by either or both of the following methods.

1. USING AIR GUN, BLOW OUT ELEMENT WITH 30 PSI (206 KPA) MAXIMUM COMPRESSED AIR FROM INSIDE TO OUTSIDE OF ELEMENT (IN DIRECTION OPPOSITE TO NORMAL AIR FLOW).
2. WASH ELEMENT IN SOLUTION OF NONSUDSING OR LOW SUDSING DETERGENT AND WATER OR SOAP AND WATER. DO NOT USE GASOLINE OR SOLVENTS FOR CLEANING.
   a. Prepare solution of 1 cup of dry detergent to 5 gallons of water in a container large enough to completely submerge the element. The temperature of the solution should not exceed 190°F (88°C). Make solution stronger if element is extremely dirty.
   b. Immerse element completely in the washing solution. Agitate element gently for 2 minutes.
   c. Allow element to soak in solution for a minimum of 15 minutes. Agitate element gently for an additional 3 to 5 minutes.
   d. Remove element from solution and allow to drain.

e. Rinse element with cold water from a hose with a maximum 45 psi (310 kpa) water pressure from inside to outside of element. Continue rinsing until water runs clear and detergent or soap residue is removed from element.

f. Allow element to air dry thoroughly.

3. INSTALL AIR CLEANER ELEMENT. See TM 9-2350-366-10-1.

END OF TASK

REPLACE AIR CLEANER AND ELBOW 0139 00

THIS WORK PACKAGE COVERS:

Removal (page 0139 00-1).
Installation (page 0139 00-6).

INITIAL SETUP:

Maintenance Level
Unit

Tools and Special Tools
General Mechanic's Tool Kit (WP 0397 00, Item 64)
Torque adapter (WP 0397 00, Item 1)
Torque wrench (WP 0397 00, Item 83)
Torque wrench (WP 0397 00, Item 84)

Materials/Parts
Lockwasher (2)
Lockwasher (3)
Locknut (10)
Resilient mount (2)
Tie strap
Decal

Personnel Required
Unit Mechanic 63T10

References
TM 9-2350-366-10-1

Equipment Condition
Engine stopped (TM 9-2350-366-10-1)
Carrier blocked (TM 9-2350-366-10-1)
Power plant grill removed (WP 0106 00)
VISMOD assembly removed (WP 0307 00)

REMOVAL

1. DISCONNECT TWO HOSES (11) FROM ELBOWS (10) ON AIR CLEANER ELBOW (6). REMOVE TWO ELBOWS (10) FROM TEE (9).
2. REMOVE TEE (9) FROM AIR CLEANER ELBOW (6).
3. REMOVE TIE STRAP (12) SECURING TWO HOSES (11) TO AIR DUCT (5). DISCARD TIE STRAP.

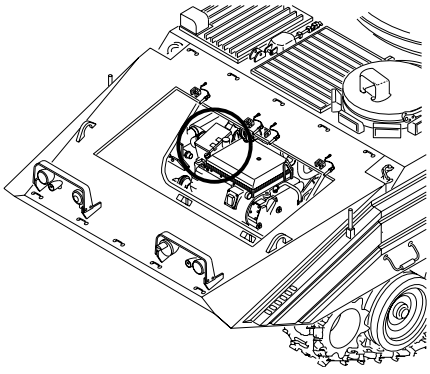

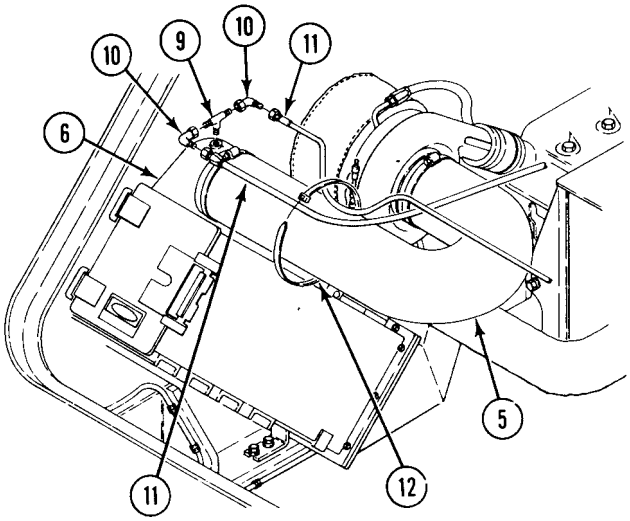

4. LOOSEN TWO CLAMPS (1) SECURING AIR DUCT (2) TO AIR CLEANER ELBOW (3) AND TURBOCHARGER (4).

5. REMOVE AIR DUCT (2) FROM AIR CLEANER ELBOW (3) AND TURBOCHARGER (4).

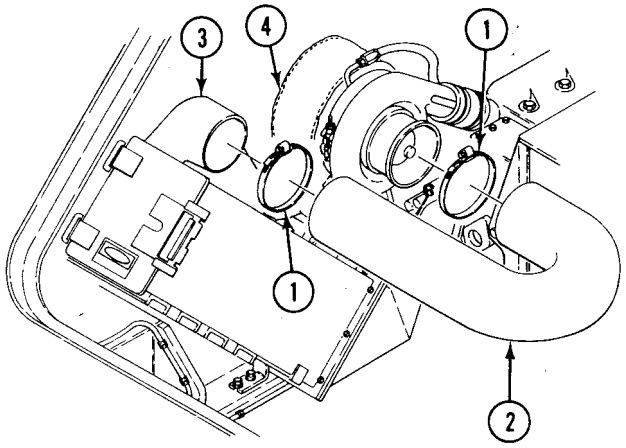

6. REMOVE TWO CLAMPS (5) FROM RIGHT EXHAUST ELBOW (6). REMOVE EXHAUST ELBOW FROM EXHAUST MANIFOLD (7) AND TURBOCHARGER INLET (8).

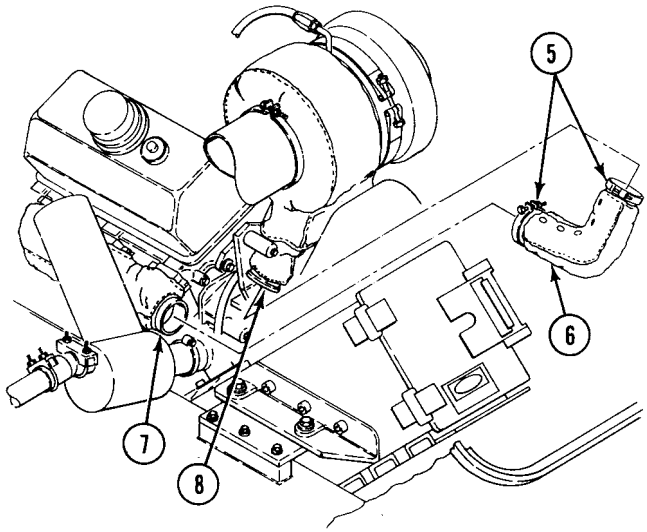

7. LOOSEN TWO CLAMPS (9) SECURING HOSE (10) TO AIR CLEANER LOWER ELBOW (11) AND EXHAUST EVACUATOR VALVE (12).

8. LOOSEN CLAMP (13) SECURING EVACUATOR VALVE (12) TO CONNECTOR (14). MOVE VALVE TOWARD AIR CLEANER ELBOW AND REMOVE VALVE.

9. REMOVE CLAMP (15) AND DUCT (16) FROM AIR CLEANER ELBOW (17).

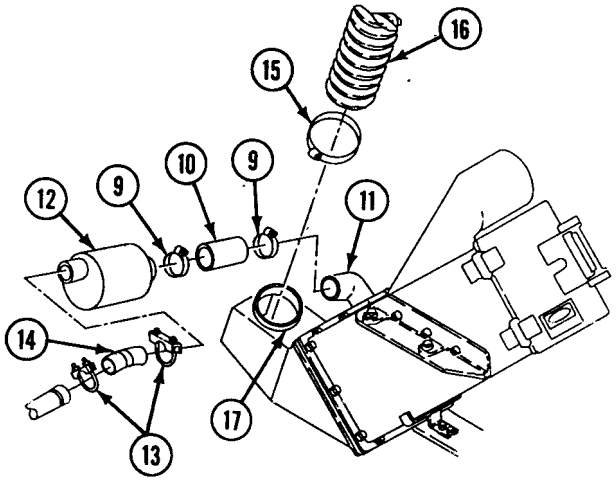

10. OPEN AND REMOVE AIR CLEANER DOOR (18).

11. RELEASE AIR CLEANER ELEMENT RETAINER (19) AND REMOVE AIR CLEANER ELEMENT (20).

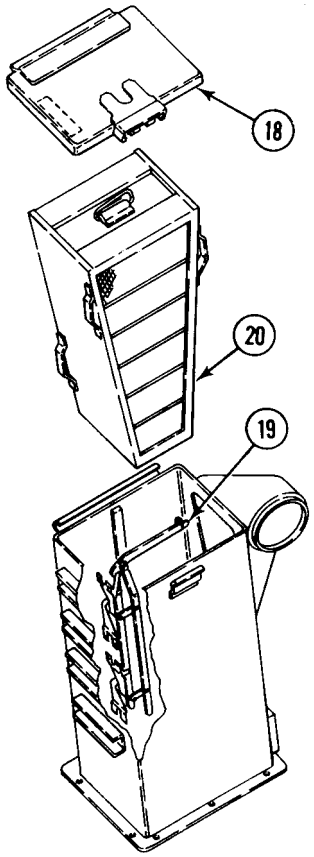

REPLACE AIR CLEANER AND ELBOW — Continued **0139 00**

12. REMOVE THREE SCREWS (1) AND WASHERS (2) SECURING BRACKET (3) TO AIR CLEANER (4).

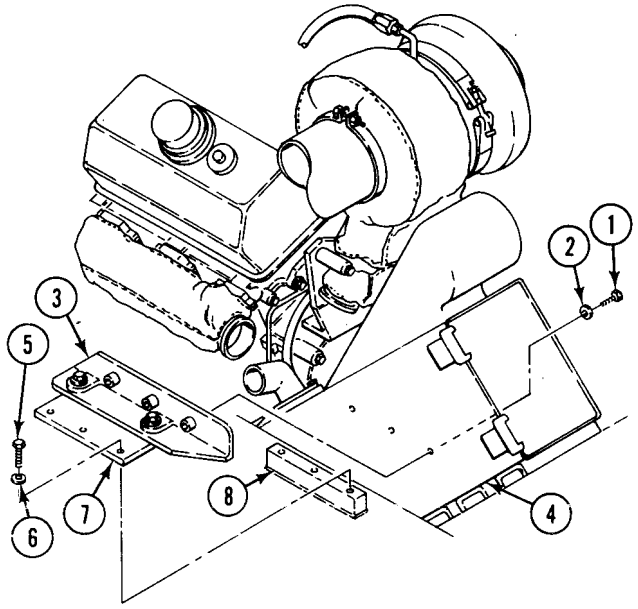

13. REMOVE THREE SCREWS (5), WASHERS (6), AND BRACKET (3 AND 7) FROM SPONSON (8).
14. REMOVE TWO SCREWS (9), LOCKWASHERS (10), WASHERS (11), AND AIR CLEANER SUPPORT (12) FROM BOX BEAM. DISCARD LOCKWASHERS.
15. REMOVE AIR CLEANER (4) FROM CARRIER.

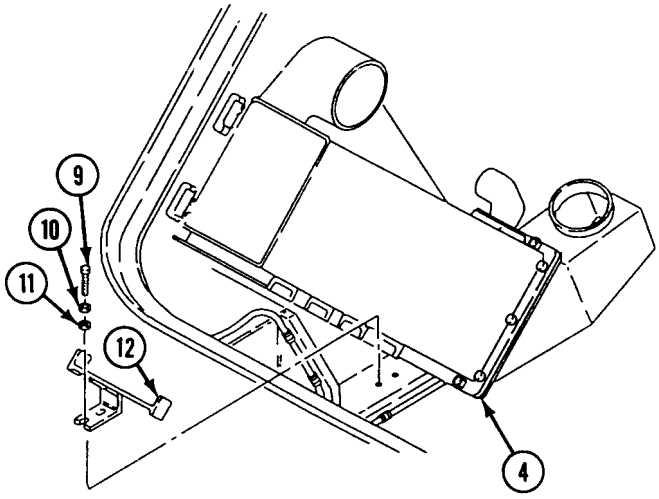

16. REMOVE THREE SCREWS (13), LOCKWASHERS (14), WASHERS (15), AND ADAPTER (16) FROM AIR CLEANER (4). DISCARD LOCKWASHERS.

NOTE

The four screws at the top and bottom edges of the air cleaner flange are installed with heads down and nuts at top.

17. REMOVE 10 SCREWS (17), 20 WASHERS (18), 10 LOCKNUTS (19), AND ELBOW (20) FROM AIR CLEANER (4). DISCARD LOCKNUTS.

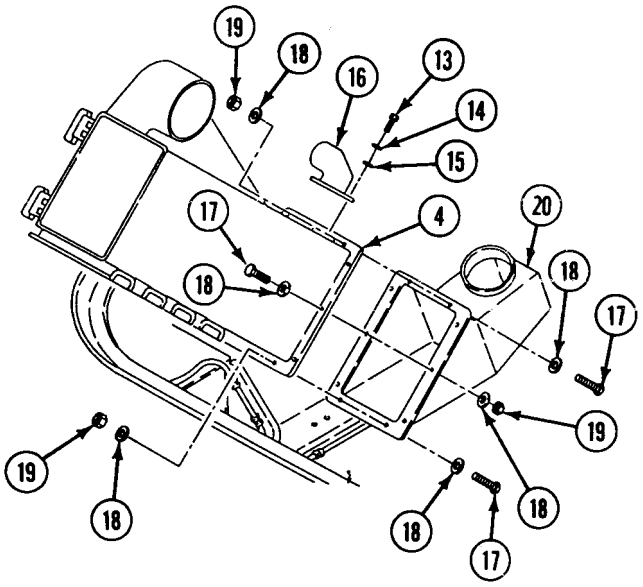

NOTE

Separate brackets only if damaged.

18. REMOVE TWO SCREWS (21), WASHERS (22), AND RESILIENT MOUNTS (23) FROM AIR CLEANER BRACKET (3) AND SPONSON BRACKET (7). DISCARD DAMAGED BRACKET AND RESILIENT MOUNTS.

INSTALLATION

NOTE

If separated, reassemble brackets.

1. LUBRICATE TWO NEW RESILIENT MOUNTS (1) WITH WATER. SECURE AIR CLEANER BRACKET (2), SPONSON BRACKET (3), AND TWO MOUNTS (1) WITH TWO SCREWS (4) AND WASHERS (5). DO NOT TIGHTEN SCREWS.

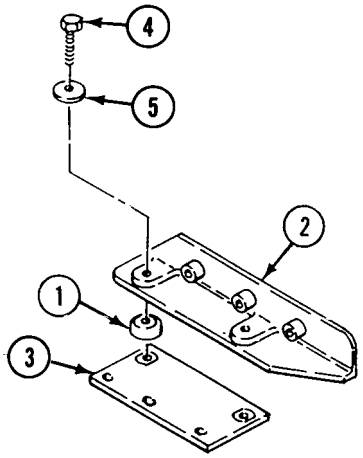

NOTE

The four screws at the top and bottom edges of the air cleaner flange must be installed with heads down and nuts at top.

2. INSTALL ELBOW (6) ON AIR CLEANER (7) AND SECURE WITH 10 SCREWS (8), 20 WASHERS (9), AND 10 NEW LOCKNUTS (10).

3. INSTALL ADAPTER (11) ON AIR CLEANER (7) AND SECURE WITH THREE SCREWS (12), NEW LOCKWASHERS (13), AND WASHERS (14).

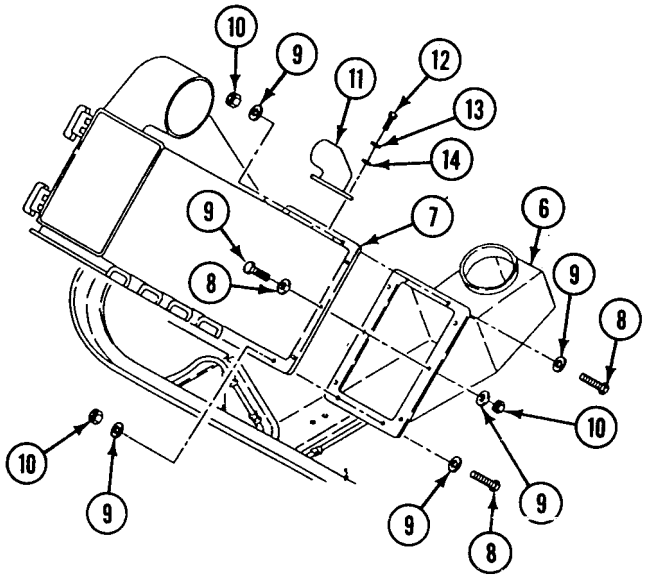

4. POSITION AIR CLEANER (7) IN ENGINE COMPARTMENT.
5. POSITION AIR CLEANER SUPPORT (15) ON BOX BEAM AND SECURE WITH TWO SCREWS (16), NEW LOCKWASHERS (17), AND WASHERS (18).

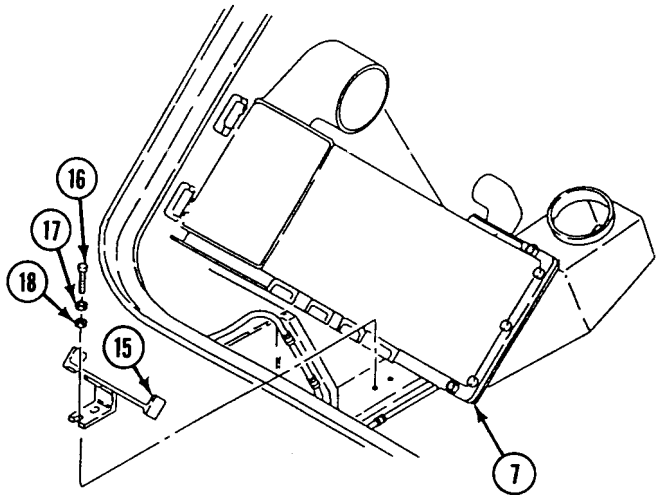

6. INSTALL BRACKETS (1 AND 2) ON SPONSON (3) AND SECURE WITH THREE SCREWS (4) AND WASHERS (5). TIGHTEN THREE SCREWS TO 32-34 LB-FT (43-46 N·M) TORQUE.

7. POSITION AIR CLEANER (6) AND AIR CLEANER BRACKET (1). SECURE BRACKET TO AIR CLEANER WITH THREE SCREWS (7) AND WASHERS (8). TIGHTEN THREE SCREWS TO 32-34 LB-FT (43-46 N·M) TORQUE.

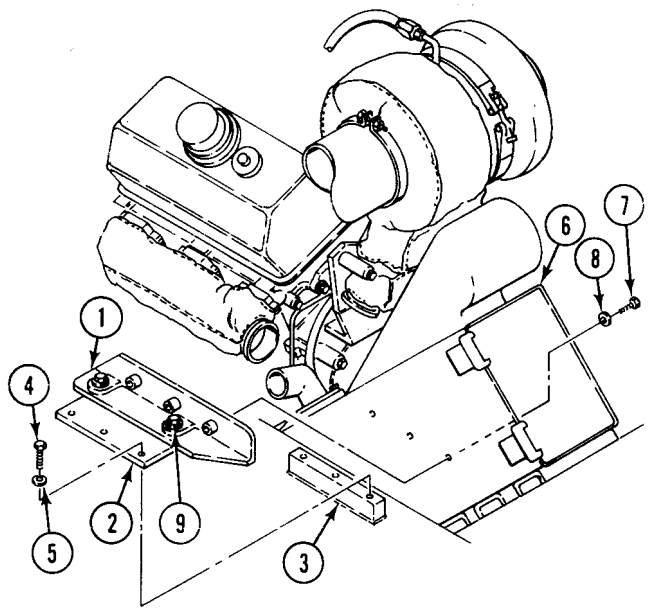

8. TIGHTEN TWO SCREWS (9) TO 25-27 LB-FT (34-37 N·M) TORQUE.

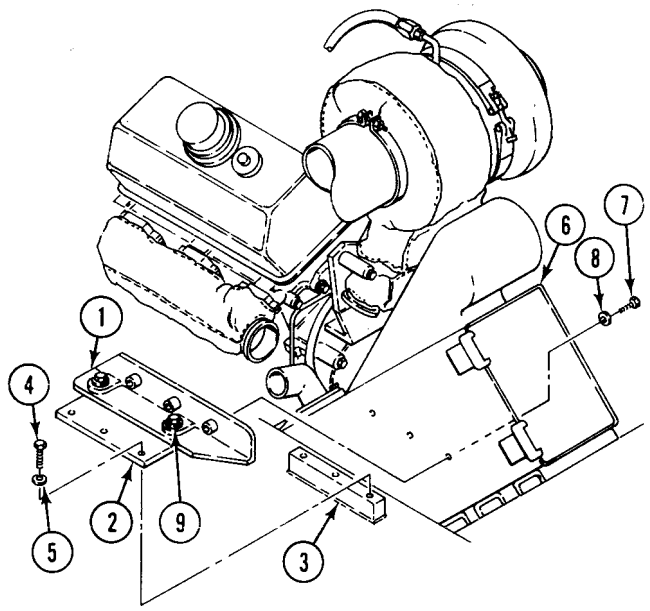

9. INSTALL AIR CLEANER ELEMENT (10) AND RESET RETAINER (11).

10. INSTALL AIR CLEANER DOOR (12) ON AIR CLEANER.

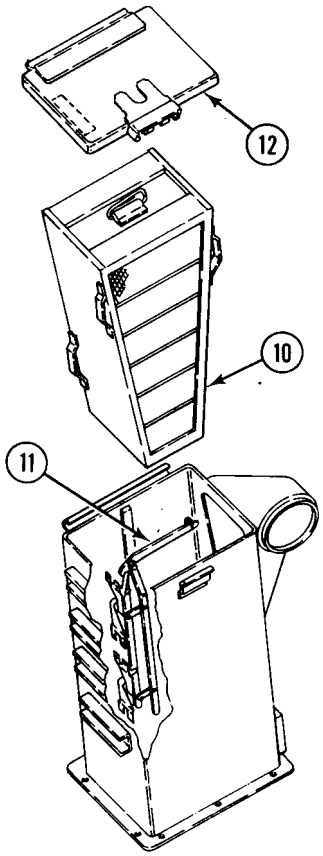

11. INSTALL CLAMP (13) AND DUCT (14) ON AIR CLEANER ELBOW (15).
12. POSITION EXHAUST EVACUATOR VALVE (16) AND HOSE (17) ON ELBOW (18) AND CONNECTOR (19).
13. ALIGN EVACUATOR VALVE (16) AS INDICATED ON TOP OF VALVE AND TIGHTEN TWO CLAMPS (20) ON HOSE (17).

14. INSTALL AND TIGHTEN CLAMP (21) ON CONNECTOR (19).

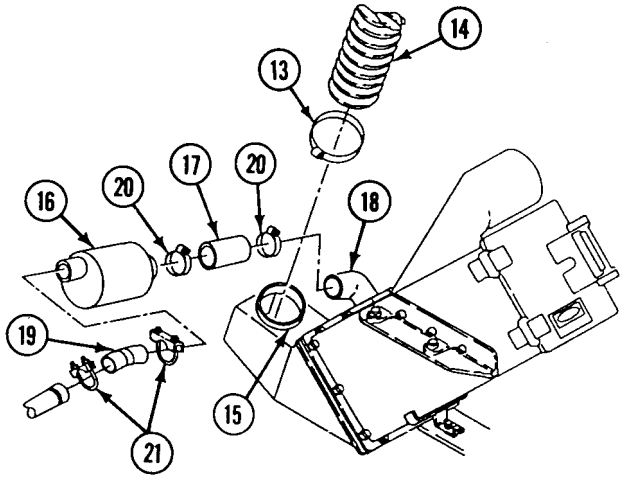

15. INSTALL RIGHT EXHAUST ELBOW (1) ON ENGINE EXHAUST MANIFOLD (2) AND TURBOCHARGER INLET (3). SECURE WITH TWO CLAMPS (4).

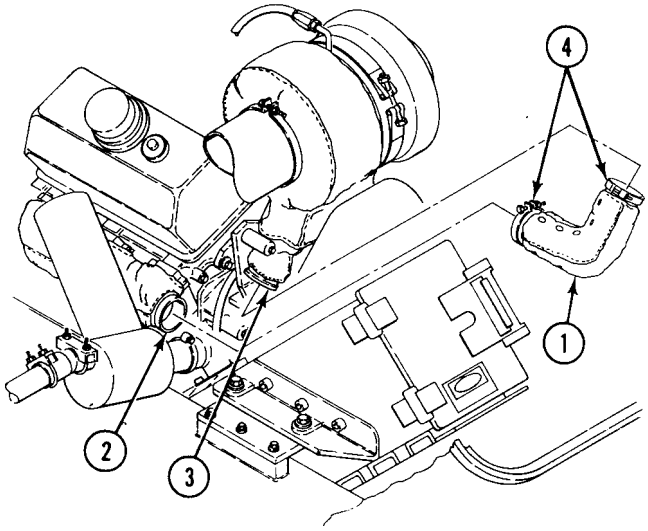

16. INSTALL AIR DUCT (5) BETWEEN AIR CLEANER ELBOW (6) AND TURBOCHARGER (7). SECURE AIR DUCT WITH TWO CLAMPS (8).

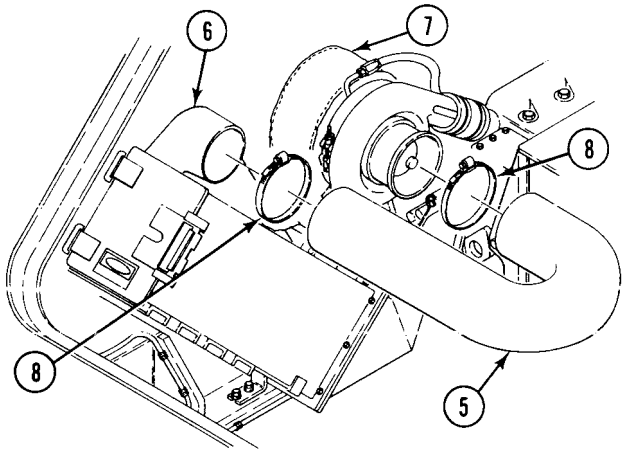

17. INSTALL TEE (9) IN AIR CLEANER ELBOW (6). INSTALL TWO ELBOWS (10) ON TEE AND CONNECT TWO HOSES (11) TO ELBOWS. SECURE TWO HOSES TO AIR DUCT (5) WITH NEW TIE STRAP (12).

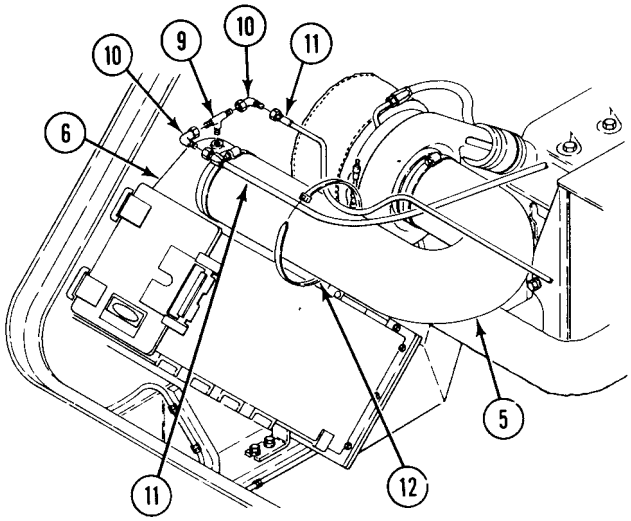

18. INSTALL POWER PLANT GRILL (WP 0335 00)
19. INSTALL VISMOD ASSEMBLY (WP 0307 00)

END OF TASK

REPAIR AIR CLEANER ASSEMBLY 0140 00

THIS WORK PACKAGE COVERS:

Removal (page 0140 00-1)
Installation (page 0140 00-1)

INITIAL SETUP:

Maintenance Level
Unit

Tools and Special Tools
General mechanic's tool kit (WP 0397 00, Item 64)

Materials/Parts
Adhesive (WP 0399 00, Item 4)
Gasket

Personnel Required
Unit Mechanic 63T10

References
TD-9-2350-366-10

Equipment Condition
Engine stopped (TD-9-2350-366-10)
Vehicle blocked (TD-9-2350-366-10)
Power plant front access panel removed TD-9-2350-366-10
VISMOD assembly removed (WP 0307 00)

REMOVAL

1. REMOVE DOOR (1) FROM AIR CLEANER (2).
2. REMOVE GASKET (3) FROM DOOR (1). DISCARD GASKET

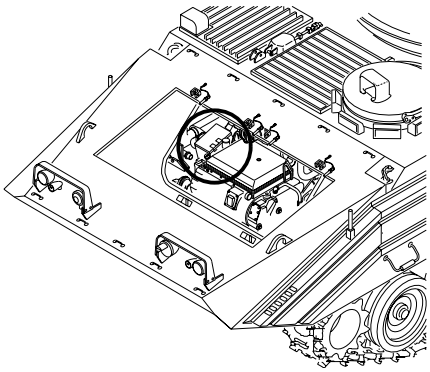

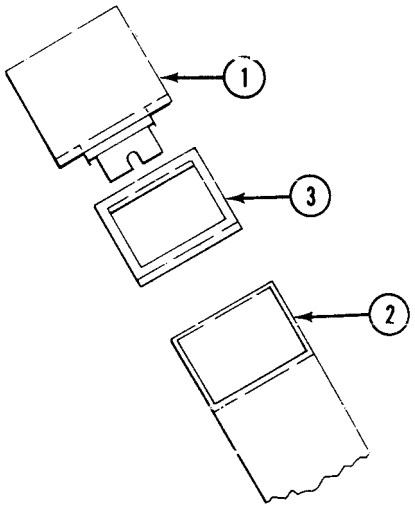

INSTALLATION

NOTE

Clean area on door before installing new gasket.

1. APPLY ADHESIVE TO NEW GASKET (3).
2. INSTALL NEW GASKET (3) ON DOOR (1).

3. INSTALL DOOR (1) ON AIR CLEANER (2).

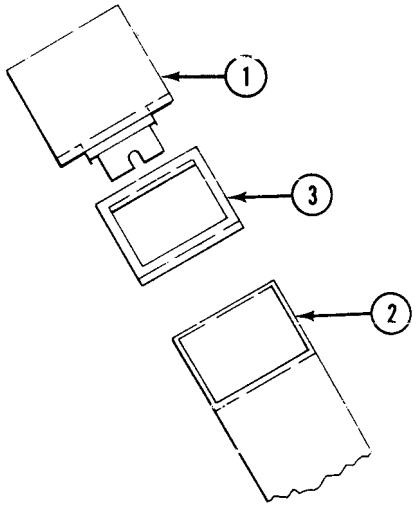

4. INSTALL POWER PLANT FRONT ACCESS PANEL. See TM 9-2350-366-10-1.
5. INSTALL VISMOD ACCESS PANELS WP 0307 00.

END OF TASK

REPAIR AIR CLEANER RETAINER 0141 00

THIS WORK PACKAGE COVERS:

Removal (page 0141 00-1)
Installation (page 0141 00-1).

INITIAL SETUP:

Maintenance Level

Unit

Tools and Special Tools

General Mechanic's Tool Kit (WP 0397 00, Item 64)

Materials/Parts

Lockwasher (8)

Personnel Required

Unit Mechanic 63T10

References

TM 9-2350-366-10

Equipment Condition

Engine stopped (TM 9-2350-366-10)

Vehicle blocked (TM 9-2350-366-10)

Power plant front access doors removed (TM 9-2350-366-10)

Air cleaner door removed (WP 0140 00)

REMOVAL

1. RELEASE RETAINER HANDLE (1) AND SLIDE OUT FILTER ELEMENT (2).
2. REMOVE EIGHT NUTS (3), LOCKWASHERS (4), AND SCREWS (5) FROM RETAINER (6) AND HOUSING (7). REMOVE RETAINER FROM HOUSING. DISCARD LOCKWASHERS.

INSTALLATION

1. POSITION NEW RETAINER (6) INTO HOUSING (7). SECURE WITH EIGHT SCREWS (5), NEW LOCKWASHERS (4), AND NUTS (3). TIGHTEN ALL NUTS AT THIS TIME.

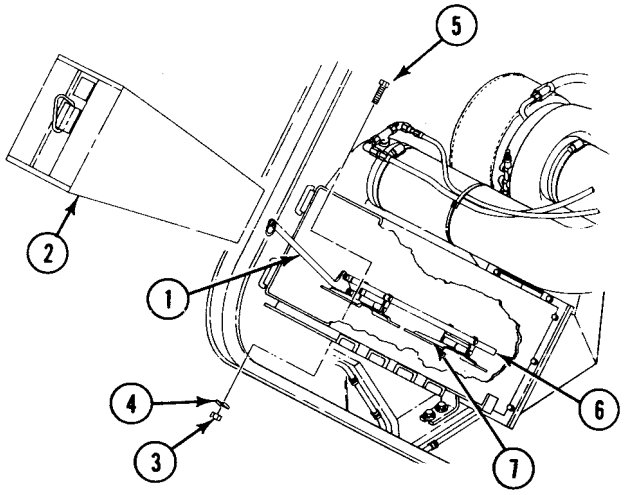

NOTE

Check operation of retainer to make sure there is no binding during operation. If binding occurs, loosen screws and repeat WP 0141 00, Step 2.

2. INSTALL FILTER ELEMENT (2) AND RESET RETAINER HANDLE (1).

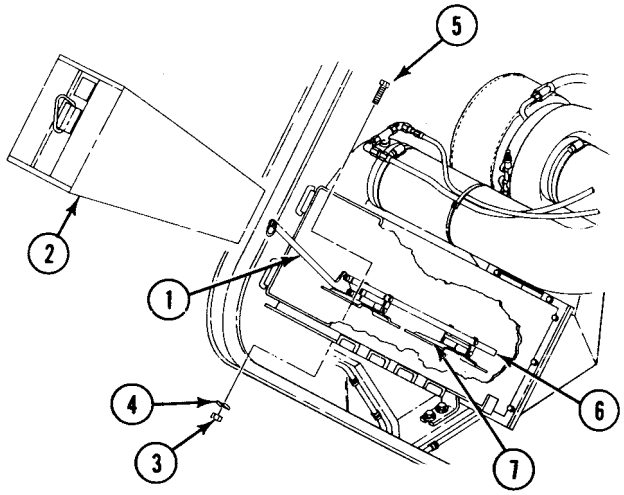

3. INSTALL AIR CLEANER DOOR (WP 0140 00).
4. INSTALL POWER PLANT FRONT ACCESS DOORS. See TM 9-2350-366-10-1.

END OF TASK

REPLACE AIR CLEANER RESTRICTION INDICATOR 0142 00

THIS WORK PACKAGE COVERS:

Removal (page 0142 00-1).
Installation (page 0142 00-1).

INITIAL SETUP:

Maintenance Level
Unit

Tools and Special Tools
General mechanic's tool kit (WP 0397 00, Item 64)

Materials/Parts
Gasket
Locknut (2)

Personnel Required
Unit Mechanic 63T10

References
TM 9-2350-366-10

Equipment Condition
Engine stopped (TM 9-2350-366-10)
Vehicle blocked (TM 9-2350-366-10)
Driver's power plant access panel removed (WP 0312 00)

REMOVAL

1. REMOVE AIR CLEANER RESTRICTION INDICATOR HOSE (1) FROM INDICATOR ADAPTER (2). TAPE END OF HOSE.
2. REMOVE TWO SCREWS (3), FOUR WASHERS (4), AND TWO LOCKNUTS (5) FROM INDICATOR (6). REMOVE INDICATOR AND GASKET (7). DISCARD GASKET AND LOCKNUTS. REMOVE ADAPTER (2) FROM INDICATOR (6).

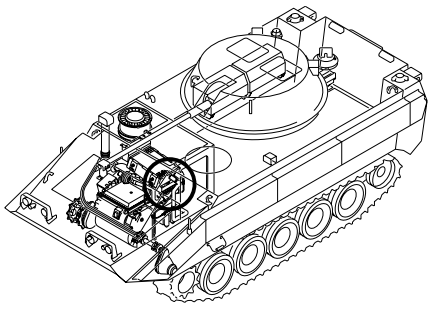

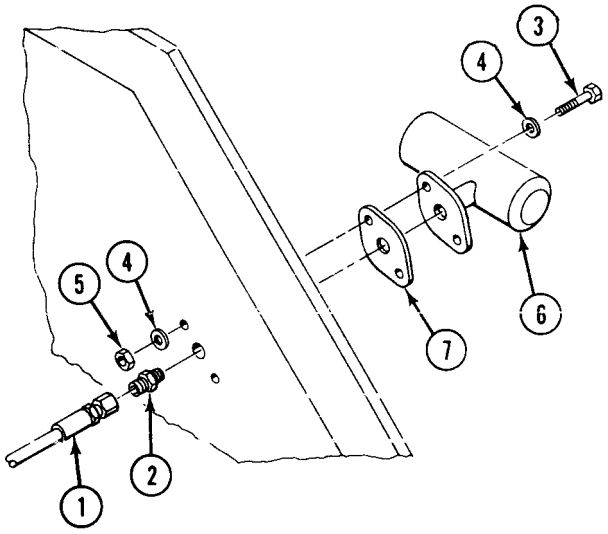

INSTALLATION

1. REMOVE AND REUSE THE MODIFIED ADAPTER (2) WITH A FILTER DISC. INSTALL ADAPTER (2) IN INDICATOR (6).
2. INSTALL RESTRICTOR INDICATOR (6), NEW GASKET (7), TWO SCREWS (3), FOUR WASHERS (4), AND TWO NEW LOCKNUTS (5).

3. INSTALL HOSE (1) ON INDICATOR ADAPTER (2).

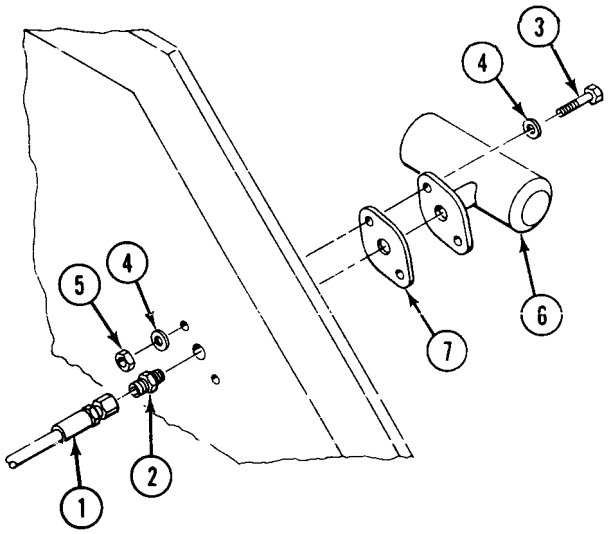

4. INSTALL DRIVER'S POWER PLANT ACCESS PANEL (WP 0312 00).

END OF TASK

REPLACE AIR CLEANER RESTRICTION INDICATOR HOSE 0143 00

THIS WORK PACKAGE COVERS:

Removal (page 0143 00-1).
Installation (page 0143 00-2).

INITIAL SETUP:

Maintenance Level
Unit

Tools and Special Tools
General Mechanic's Tool Kit (WP 0397 00, Item 64)

Materials/Parts
Sealing compound (WP 0397 00, Item 55)
Strap

Personnel Required
Unit Mechanic 63T10

References
TM 9-2350-366-10-1

Equipment Condition
Engine stopped (TM 9-2350-366-10-1)
Vehicle blocked (TM 9-2350-366-10-1)
Power plant front access panel removed (TM 9-2350-366-10-1)
VISMOD access panel removed (WP 0307 00)

REMOVAL

1. DISCONNECT AIR CLEANER RESTRICTOR INDICATOR HOSE (8) FROM INDICATOR ADAPTER (11).
2. REMOVE STRAP (9) FROM HOSE (8) AND AIR INTAKE ELBOW (10). DISCARD STRAP.

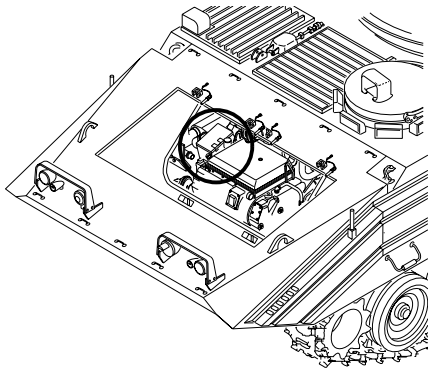

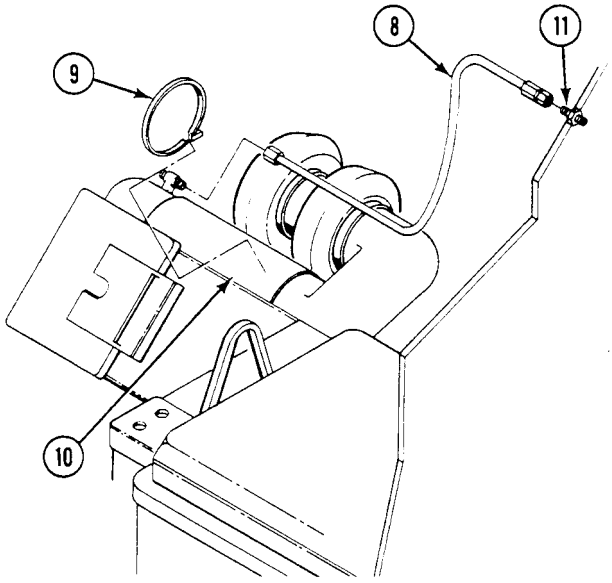

3. REMOVE HOSE (1) FROM REDUCER (5).
4. REMOVE NUT (6) AND REDUCER (5) FROM ELBOW (7).
5. REMOVE ELBOW (7) FROM INDICATOR SIDE OF TEE (8).
6. REMOVE HOSE (9) FROM ELBOW (10).

7. REMOVE TEE (8) FROM REDUCER (11), AND ELBOW (10).

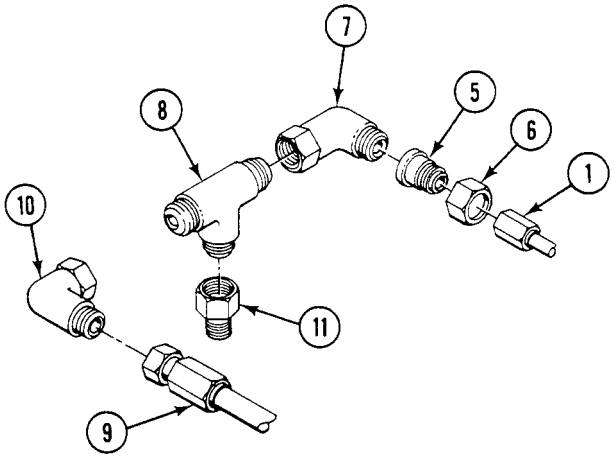

INSTALLATION

1. APPLY LIGHT COAT OF SEALING COMPOUND TO PIPE THREADS OF TEE (1). INSTALL TEE ON REDUCER (2).
2. INSTALL ELBOW (3) ON TEE (1).
3. INSTALL HOSE (4) ON ELBOW (3).
4. INSTALL ELBOW (5) ON TEE (1).
5. INSTALL REDUCER (6) AND NUT (7) ON ELBOW (5).
6. INSTALL HOSE (8) ON REDUCER (6).
7. INSTALL NEW STRAP (9) ON HOSE (8) AND ELBOW (10).

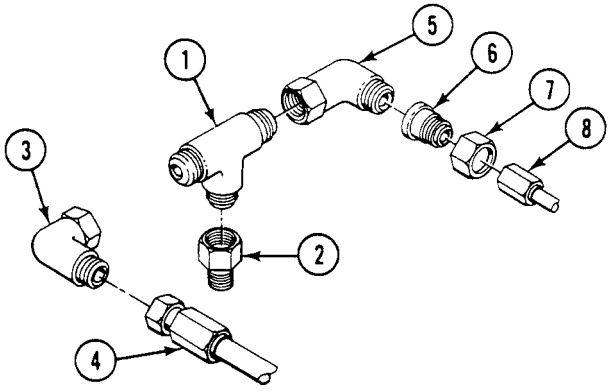

8. CONNECT HOSE (8) TO INDICATOR ADAPTER (11).

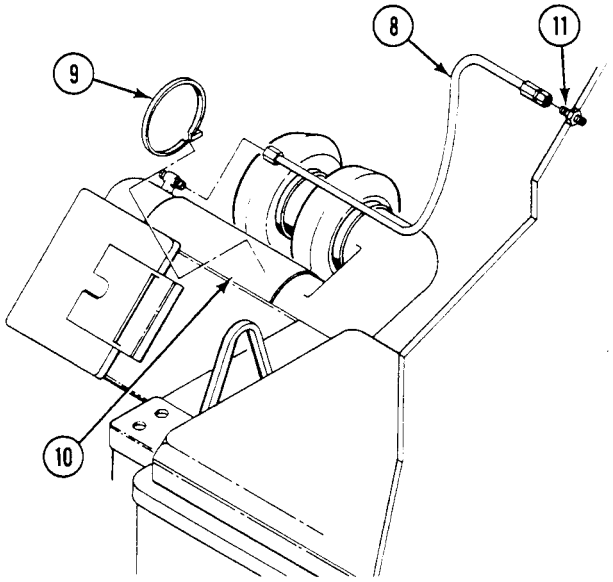

9. INSTALL POWER PLANT FRONT ACCESS PANEL. See TM 9-2350-366-10-1.
10. INSTALL VISMOD ACCESS PANELS (WP 0307 00).

END OF TASK

REMOVE/INSTALL AIR INTAKE ELBOW 0144 00

THIS WORK PACKAGE COVERS:

Removal (page 0144 00-1).
Installation (page 0144 00-1).

INITIAL SETUP:

Maintenance Level
Unit

Tools and Special Tools
General Mechanic's Tool Kit (WP 0397 00, Item 64)

Materials/Parts
Strap

Personnel Required
Unit Mechanic 63T10

References
TM 9-2350-366-10-1

Equipment Condition
Engine stopped (TM 9-2350-366-10-1)
Vehicle blocked (TM 9-2350-366-10-1)
Power plant front access panel removed (WP 0309 00)
VISMOD access panel removed (WP 0307 00)

REMOVAL

1. REMOVE STRAP (1) FROM AIR INTAKE ELBOW (2) AND AIR RESTRICTION INDICATOR HOSE (3) DISCARD STRAP.

2. LOOSEN TWO CLAMPS (4) AND REMOVE AIR INTAKE ELBOW (2) FROM TURBOCHARGER INLET (5) AND AIR CLEANER (6).

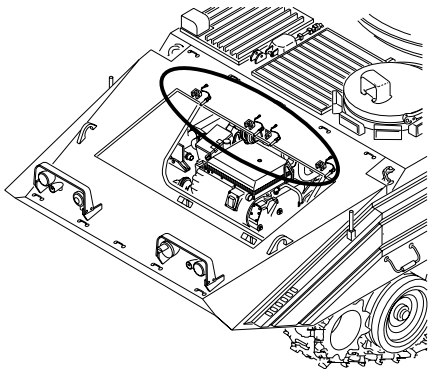

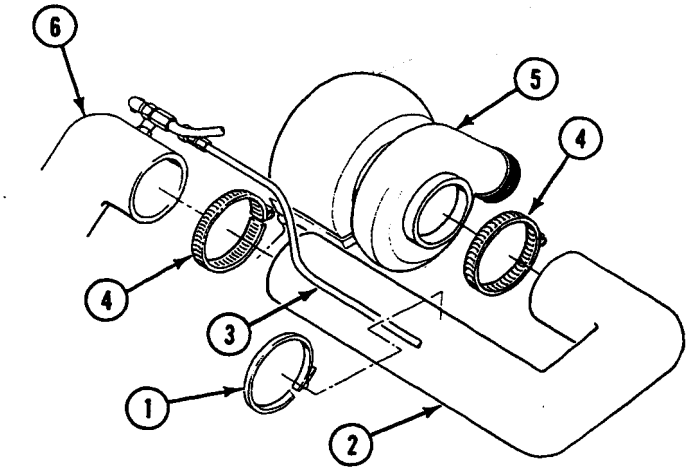

INSTALLATION

1. INSTALL AIR INTAKE ELBOW (2) ON TURBOCHARGER INLET (5) AND AIR CLEANER (6). SECURE WITH TWO CLAMPS (4).

2. INSTALL NEW STRAP (1) TO SECURE AIR RESTRICTION HOSE (3) TO AIR INTAKE ELBOW (2).

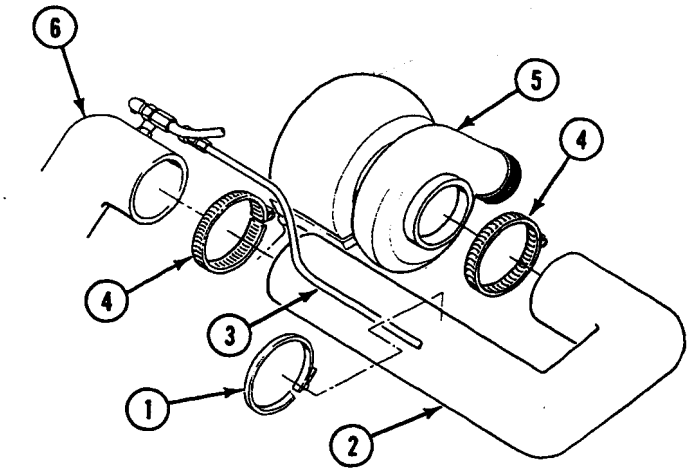

3. CLOSE POWER PLANT ACCESS DOOR (WP 0309 00).
4. INSTALL VISMOD ACCESS PANEL (WP 0307 00).

END OF TASK

REPLACE GRILL AIR INTAKE ELBOW AND HOSE 0145 00

THIS WORK PACKAGE COVERS:

Removal (page 0145 00-1).
Installation (page 0145 00-4).

INITIAL SETUP:

Maintenance Level

Unit

Tools and Special Tools

General mechanic's tool kit (WP 0397 00, Item 64)

Personnel Required

Unit Mechanic 63T10

References

TM 9-2350-366-10-1

Equipment Condition

Engine stopped (TM 9-2350-366-10-1)
Vehicle blocked (TM 9-2350-366-10-1)
Power plant grill removed (WP 0335 00)
Front VISMOD access panel removed (WP 0307 00)
Replace/remove nose assembly (WP 0313 00)

REMOVAL

1. REMOVE TWO CLAMPS IN TANDEM (1), FROM ELBOW (2) AND BRACKET (3) ON POWER PLANT GRILL (4).

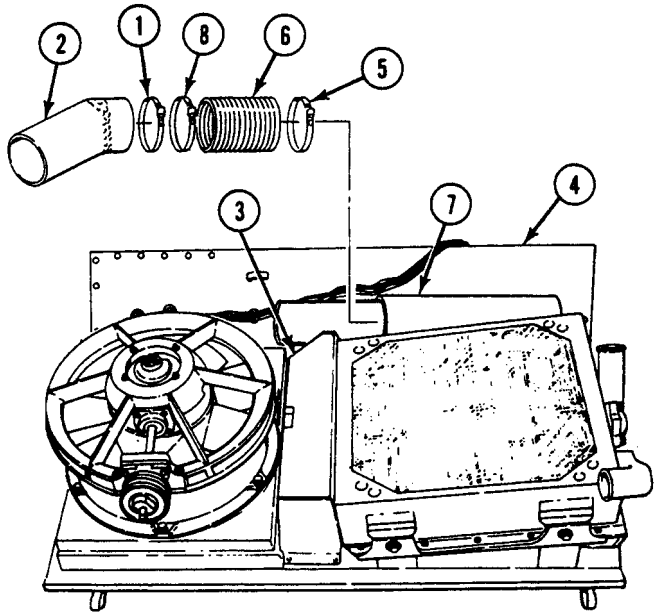

2. REMOVE CLAMP (5) FROM INTAKE HOSE (6) AND PLENUM (7).

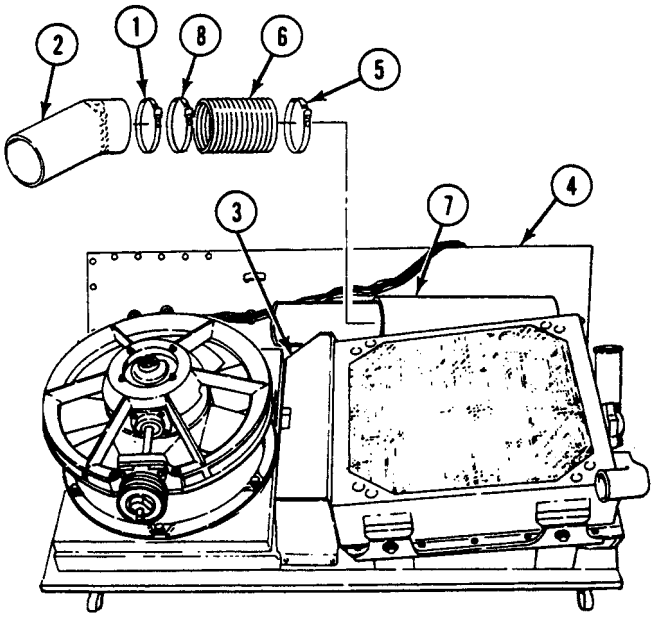

3. REMOVE CLAMP (8) FROM INTAKE HOSE (6) AND ELBOW (2).

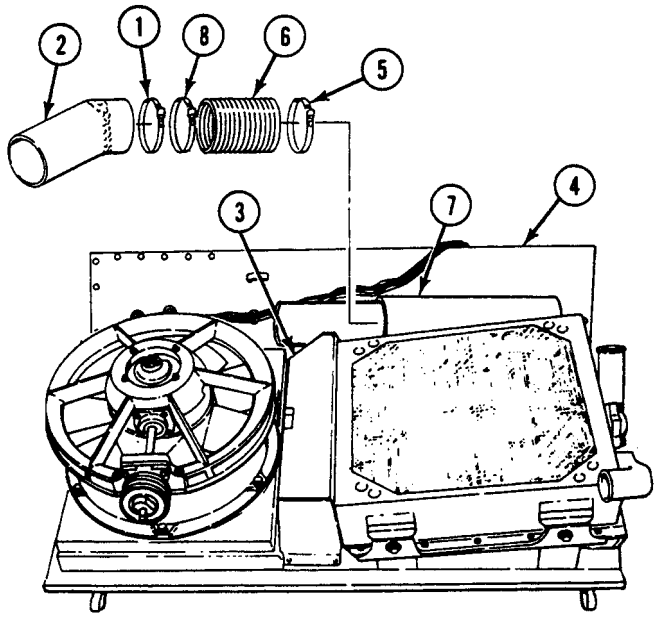

INSTALLATION

1. INSTALL AIR INTAKE HOSE (6) ON ELBOW (2). SECURE WITH CLAMP (8).

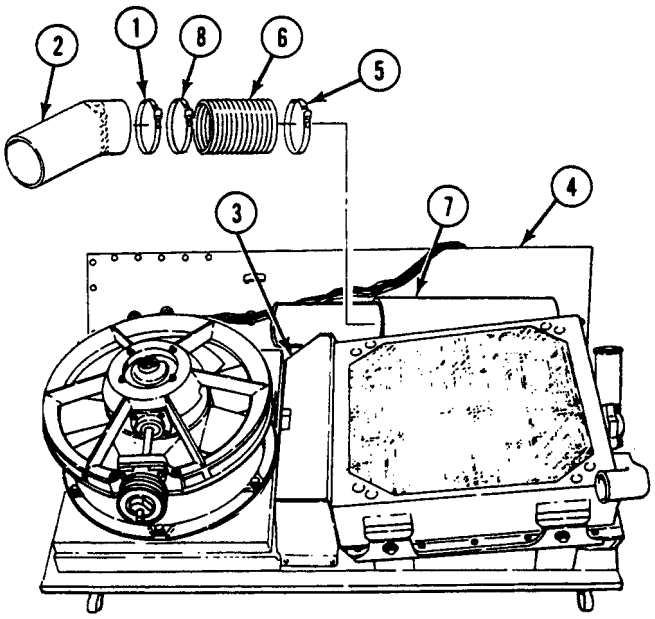

2. INSTALL HOSE (6) ON PLENUM (7). SECURE WITH CLAMP (5).

3. SECURE ELBOW (2) TO BRACKET (3) ON GRILL (4) WITH TWO CLAMPS IN TANDEM (1).

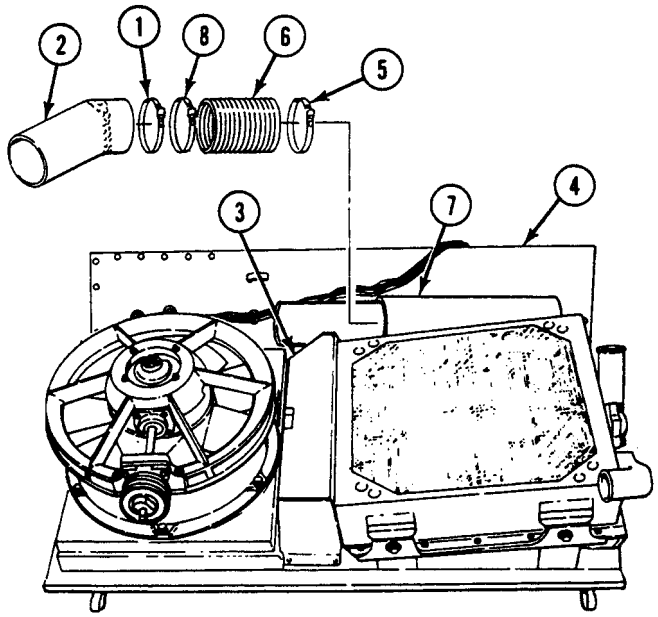

4. INSTALL POWER PLANT GRILL (WP 0335 00).
5. INSTALL FRONT VISMOD ACCESS PANEL (WP 0307 00).

END OF TASK

REPLACE EXHAUST EVACUATOR VALVE AND CONNECTOR 0146 00

THIS WORK PACKAGE COVERS:

Removal (page 0146 00-1).
Installation (page 0146 00-4).

INITIAL SETUP:

Maintenance Level
Unit

Tools and Special Tools
General mechanic's tool kit (WP 0397 00, Item 64)
Torque wrench (WP 0397 00, Item 83)

Materials/Parts
Clamp (2)
Lock washer (2)

Personnel Required
Unit Mechanic 63T10

References
TM 9-2350-366-10-1

Equipment Condition
Engine stopped (TM 9-2350-366-10-1)
Vehicle blocked (TM 9-2350-366-10-1)
Power plant front access door removed (TM 9-2350-366-10-1)
Power plant grill removed (WP 0335 00)
VISMOD assembly removed (WP 0307 00)

REMOVAL

1. REMOVE THREE SCREWS (8) AND WASHERS (9) HOLDING AIR CLEANER SUPPORT (5) TO SPONSON.

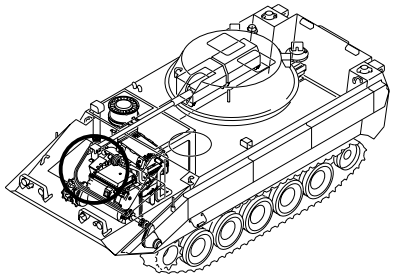

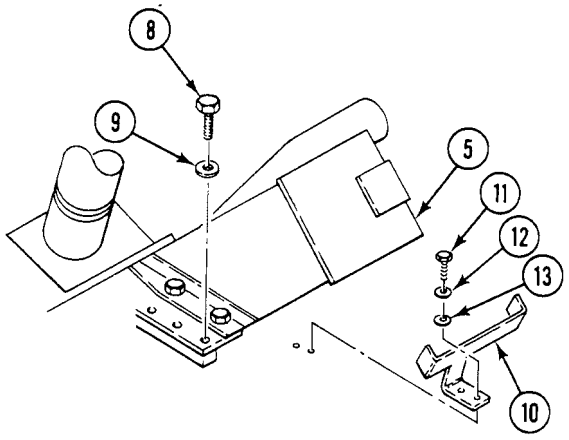

2. REMOVE TWO SCREWS (11), LOCK WASHERS (12), WASHERS (13), AND AIR CLEANER SUPPORT (10). DISCARD LOCK WASHERS.

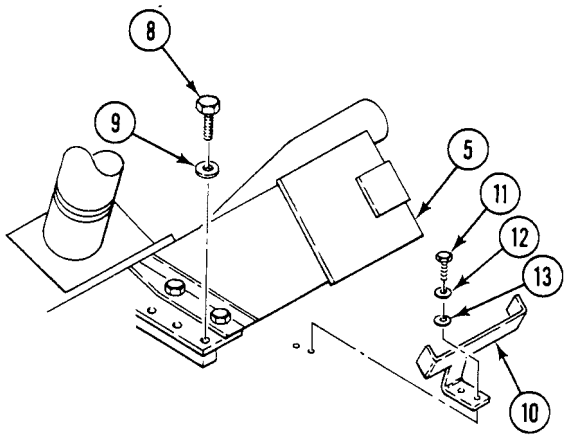

3. LOOSEN TWO CLAMPS (8) SECURING HOSE (9) TO EVACUATOR VALVE (10) AND AIR CLEANER ADAPTER (11). SLIDE HOSE (9) ONTO EVACUATOR (10).

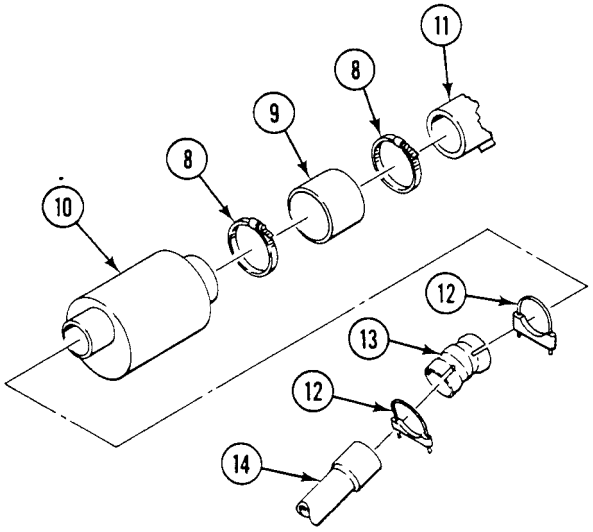

4. REMOVE TWO CLAMPS (12) SECURING CONNECTOR (13) TO MUFFLER (10) AND EVACUATOR VALVE (14). DISCARD CLAMPS.

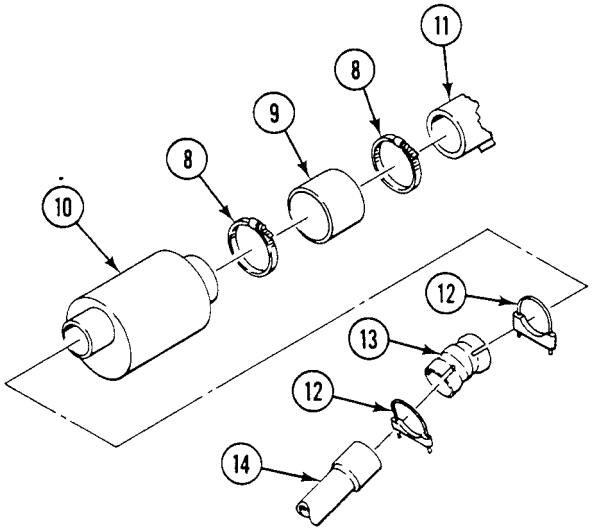

5. MOVE AIR CLEANER AGAINST POWER PLANT. REMOVE CONNECTOR (13) AND VALVE (10) FROM MUFFLER (14). SEPARATE CONNECTOR AND VALVE. REMOVE CLAMPS (8) AND HOSE (9) FROM VALVE.

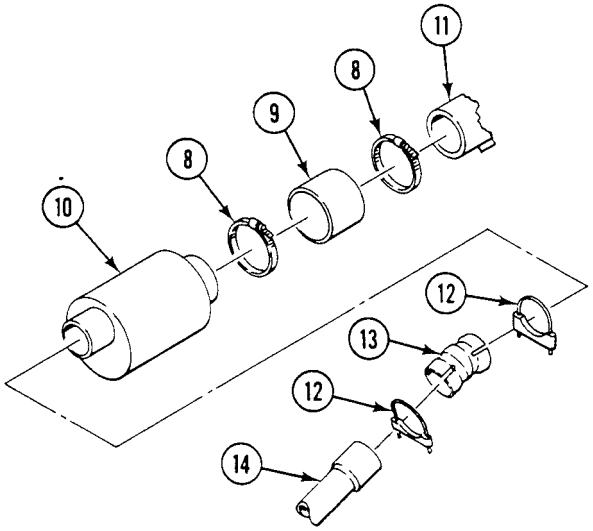

INSTALLATION

1. JOIN VALVE (1) AND CONNECTOR (2). INSTALL HOSE (3) ON VALVE (1). INSTALL CLAMPS (4) AND VALVE (1).

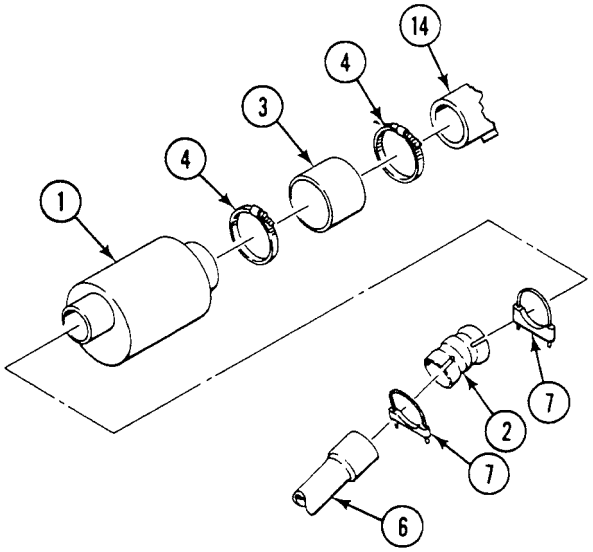

2. MOVE AIR CLEANER (5) AGAINST POWER PLANT. INSTALL CONNECTOR (2) AND VALVE (1) ON MUFFLER (6).

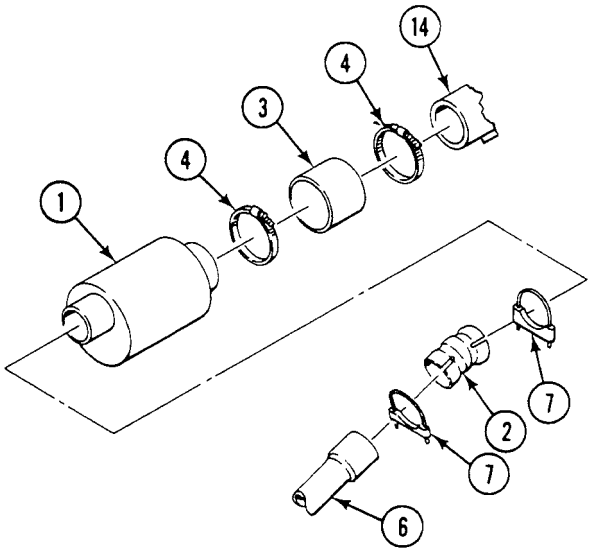

NOTE

The position of the lettering may be within + 1.5 inch of the top.

3. ROTATE VALVE (1) AND CONNECTOR (2) UNTIL THE LETTERING IS ON THE TOP AND THE DRAIN IS ON THE BOTTOM.

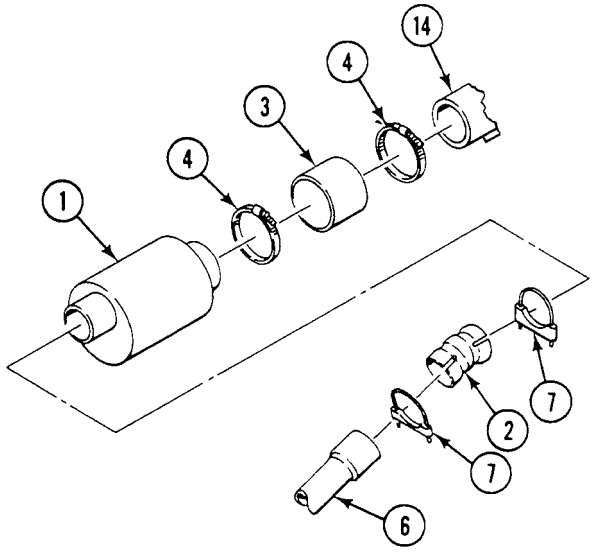

4. SECURE CONNECTOR (2) TO MUFFLER (6) AND VALVE (1) WITH TWO NEW CLAMPS (7).

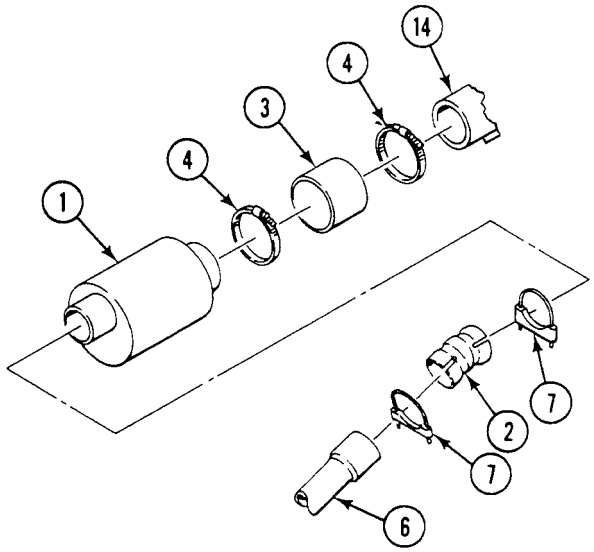

5. MOVE AIR CLEANER (5) IN POSITION. SECURE AIR CLEANER TO SPONSON WITH THREE SCREWS (8) AND WASHERS (9). TIGHTEN SCREWS TO 32-34 LB-FT (43-46 N.M) TORQUE. USE TORQUE WRENCH.

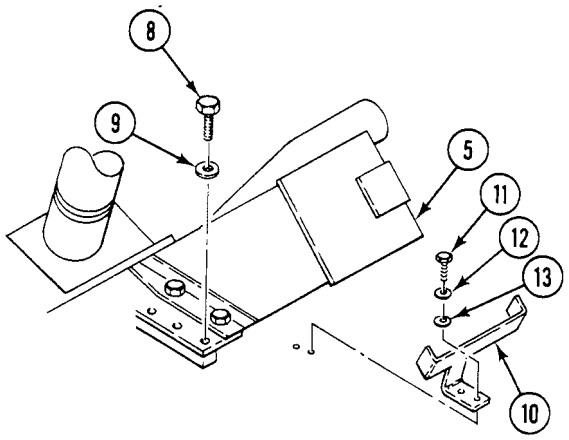

6. INSTALL SUPPORT (10), TWO SCREWS (11), NEW LOCK WASHERS (12), AND FLAT WASHERS (13).

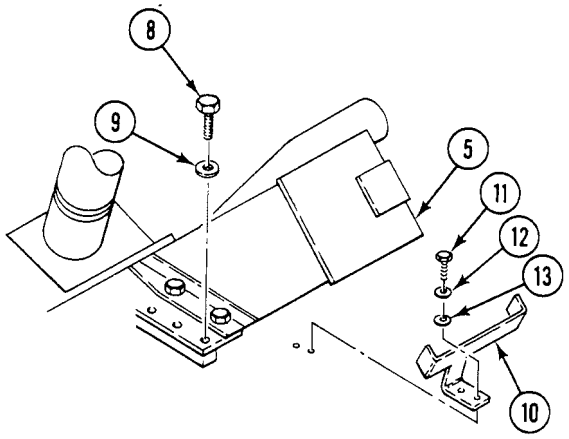

7. SLIDE HOSE (3) ON VALVE ONTO AIR CLEANER ADAPTER (14). SECURE HOSE WITH TWO CLAMPS (4).

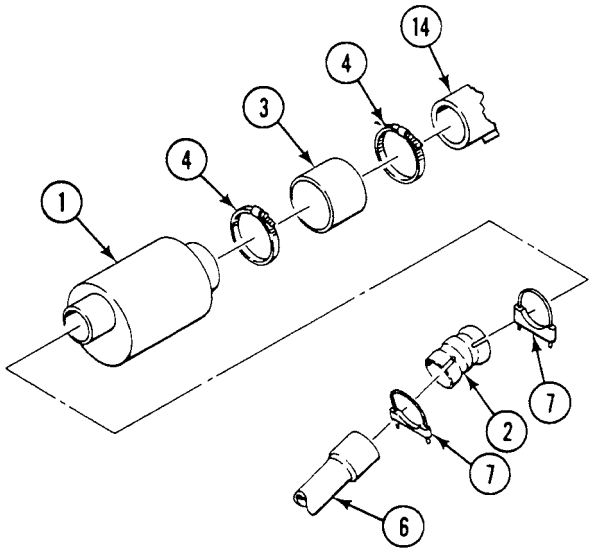

8. INSTALL POWER PLANT GRILL (WP 0335 00).
9. INSTALL POWER PLANT FRONT ACCESS PANEL. See TM 9-2350-366-10-1.
10. INSTALL VISMOD ASSEMBLY (WP 0307 00).

END OF TASK

ADJUST VENTILATING FAN DRIVE BELT 0147 00

THIS WORK PACKAGE COVERS:

Adjustment (page 0147 00-1).

INITIAL SETUP:

Maintenance Level
Unit

Tools and Special Tools
General mechanic's tool kit (WP 0397 00, Item 64)
V-belt tensiometer (WP 0397 00, Item 58)
Adjustable wrench (WP 0397 00, Item 72)
Yardstick (WP 0397 00, Item 85)

Personnel Required
Unit Mechanic 63T10

References
TM 9-2350-366-10-1

Equipment Condition
Engine stopped (TM 9-2350-366-10-1)
Carrier blocked (TM 9-2350-366-10-1)
Rear power plant access panels removed (WP 0309 00)
Power plant access support removed (WP 0309 00)
Rotate turret to 3200 mils for access

ADJUSTMENT

1. CHECK VENTILATING FAN DRIVE BELT (7) FOR DAMAGE. IF DAMAGED, REPLACE DRIVE BELT (WP 0147 00).

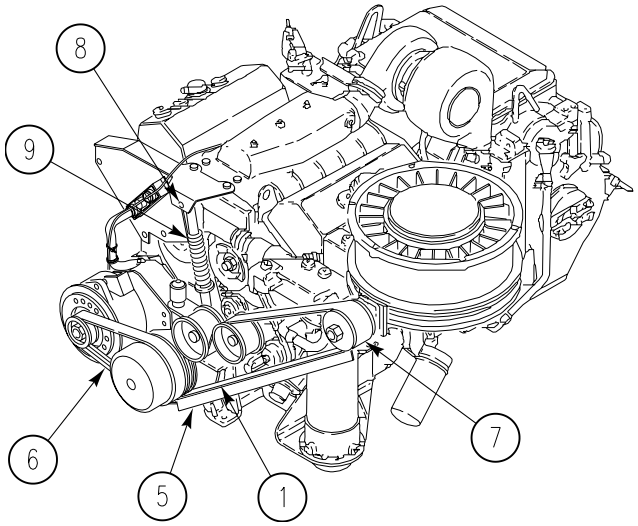

ADJUST VENTILATING FAN DRIVE BELT — Continued **0147 00**

2. POSITION LOWER O-RING (2) ON TENSIOMETER (3) AT MAXIMUM ALLOWABLE BELT DEFLECTION OF 5/8 INCH (1.6 CM).
3. POSITION UPPER O-RING (4) ON TENSIOMETER AT ZERO (0).

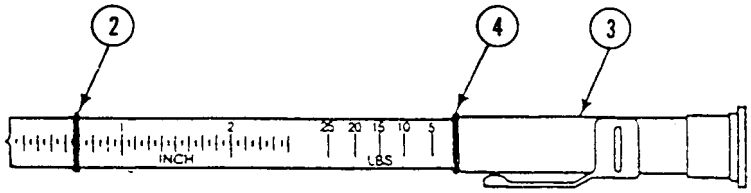

4. PLACE YARDSTICK (5) ON PULLEYS (6) AND (7).

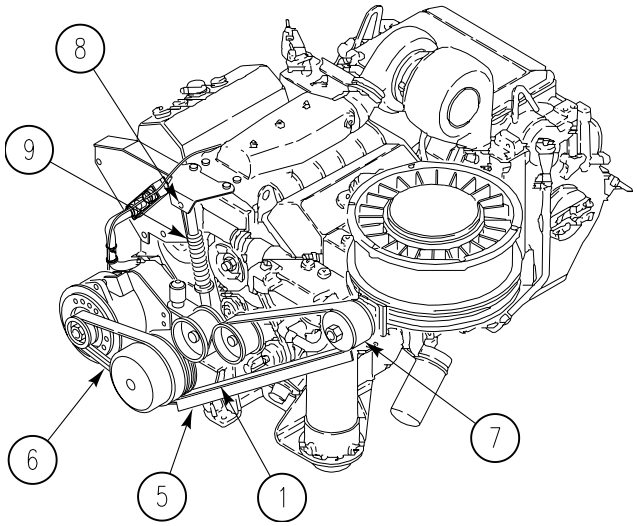

5. PLACE TENSIOMETER (3) ON BELT (1) AT MIDSPAN AND AT RIGHT ANGLE TO BELT.

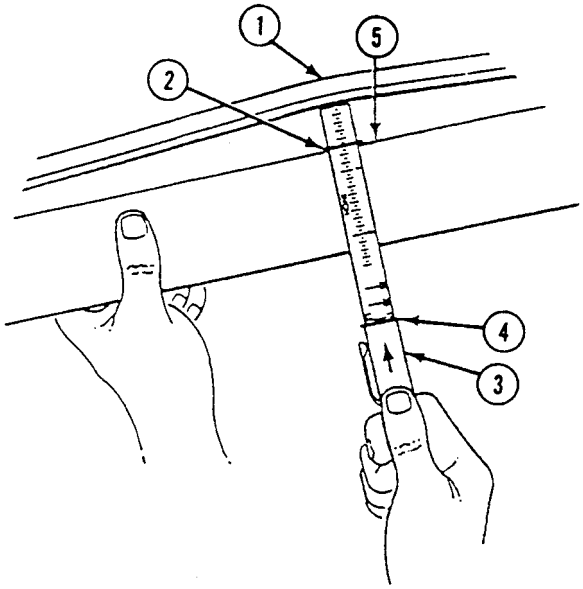

6. PRESS ON TOP OF TENSIOMETER (3) UNTIL LOWER O-RING (2) ALIGNS WITH YARDSTICK (5). REMOVE TENSIOMETER.

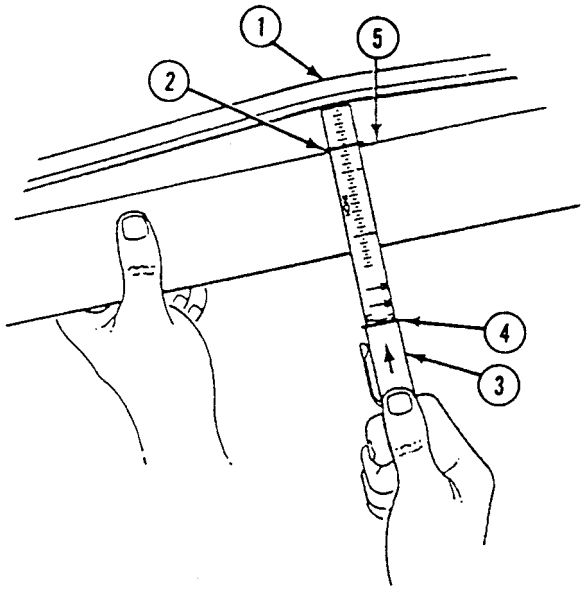

7. TAKE TENSIOMETER READING AT POINT WHERE UPPER O-RING (4) STOPPED. READING MUST BE 12-15 LBS (5-7 KG).

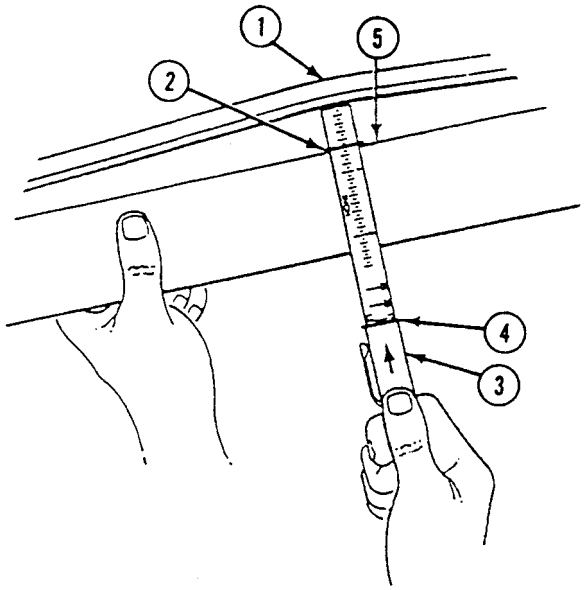

ADJUST VENTILATING FAN DRIVE BELT — Continued **0147 00**

8. TO CHANGE BELT TENSION, LOOSEN LOCKNUT (8) AND ADJUST FAN IDLER ADJUSTING NUT (9) TO OBTAIN TENSION REQUIRED. TIGHTEN LOCKNUT.

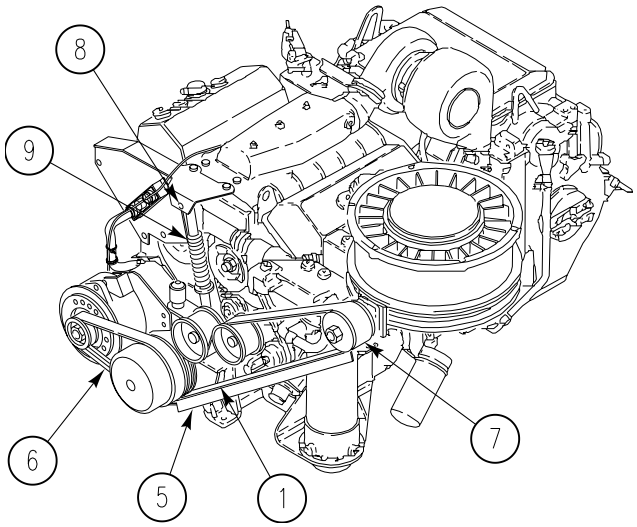

9. TURN THERMOSTATIC FAN SPEED SWITCH BYPASS BUTTON ON (TM 9-2350-366-10-1).
10. START ENGINE (TM 9-2350-366-10-1).
11. RUN IN COOLING FAN BELT FOR 10 MINUTES WITH ENGINE AT 2000 RPM.
12. STOP ENGINE (TM 9-2350-366-10-1).
13. CHECK BELT TENSION. ADJUST AS NEEDED.
14. TURN THERMOSTATIC FAN SPEED SWITCH BYPASS BUTTON OFF.
15. INSTALL POWER PLANT ACCESS SUPPORT (WP 0309 00)
16. INSTALL REAR POWER PLANT ACCESS PANELS (TM 9-2350-366-10-1).
17. ROTATE TURRET BACK TO 6400 MILS.

END OF TASK

REPLACE VENTILATING FAN DRIVE BELT 0148 00

THIS WORK PACKAGE COVERS:

Removal (page 0148 00-1).
Installation (page 0148 00-2).

INITIAL SETUP:

Maintenance Level

Unit

Tools and Special Tools

General mechanic's tool kit (WP 0397 00, Item 64)
Adjustable wrench (WP 0397 00, Item 73)

Personnel Required

Unit Mechanic 63T10

Equipment Condition

Engine stopped (TM 9-2350-366-10-1)
Carrier blocked (TM 9-2350-366-10-1)
Power plant rear access panels removed (TM 9-2350-366-10-1)
Generator belt removed (WP 0173 00)
Fan drive pulley access cover removed (TM 9-2350-366-10-1)
Turret rotated to 3200 mils (TM 9-2350-366-10-2)

References

TM 9-2350-366-10-1
TM 9-2350-366-10-2

REMOVAL

1. LOOSEN LOCKNUT (1) THAT SECURES ADJUSTING NUT (2).
2. ROTATE ADJUSTING NUT (2) TO LOOSEN FAN DRIVE BELT (3). DISCARD FAN DRIVE BELT (3). USE ADJUSTABLE WRENCH.

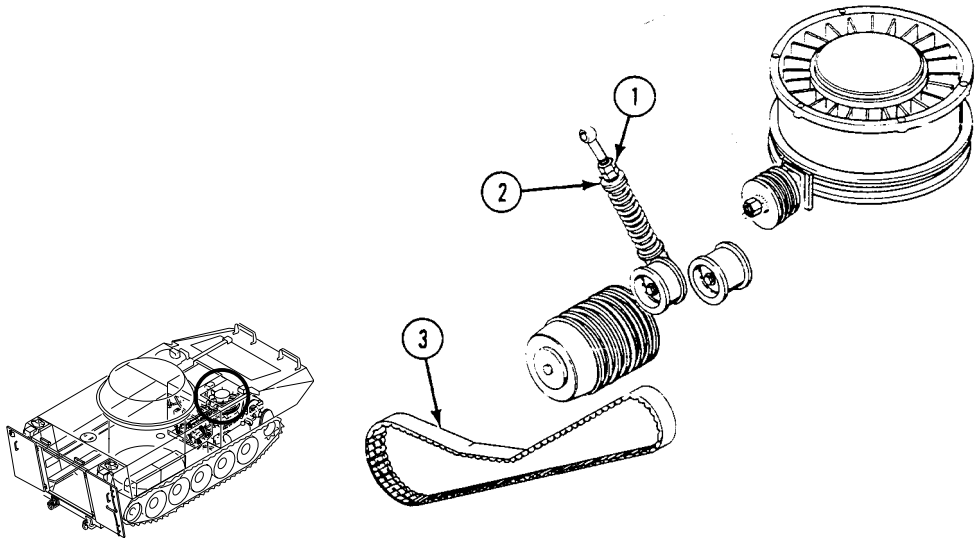

INSTALLATION

NOTE

All pulleys should rotate freely before installing new fan drive belt.

Readjust new drive belt after 25–50 miles (40–80 Km) of carrier operation.

1. POSITION NEW FAN DRIVE BELT (1) ON PULLEYS AND TENSIONERS (5), (3), (2), AND (4).

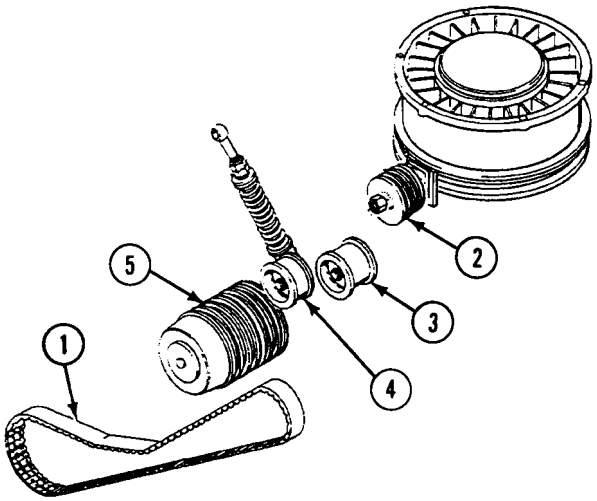

2. ADJUST FAN DRIVE BELT (WP 0172 00).
3. START ENGINE. See TM 9-2350-366-10-1.
4. CHECK FAN DRIVE BELT FOR PROPER OPERATION.
5. STOP ENGINE. See TM 9-2350-366-10-1.
6. INSTALL GENERATOR BELT (WP 0173 00).
7. ADJUST GENERATOR BELT (WP 0172 00).
8. INSTALL FAN DRIVE PULLEY ACCESS COVER. See TM 9-2350-366-10-1.
9. INSTALL POWER PLANT REAR ACCESS PANELS. See (TM 9-2350-366-10-1).
10. ROTATE TURRET TO 6400 MILS. See (TM 9-2350-366-10-2).

END OF TASK

CHAPTER 7

UNIT MAINTENANCE INSTRUCTIONS FOR EXHAUST SYSTEM

WORK PACKAGE INDEX

Title	Sequence No.
REPLACE ENGINE EXHAUST ELBOWS AND DOUBLE FLEX JOINT	0149 00
REPAIR DOUBLE FLEX EXHAUST JOINT	0150 00
REPLACE MUFFLER EXTENSION AND CAP	0151 00
REPLACE EXHAUST MUFFLER AND BRACKET	0152 00
REPLACE ENGINE LEFT/RIGHT EXHAUST ELBOWS	0153 00
REPLACE LEFT/RIGHT TURBO EXHAUST PIPE HEAT SHIELD	0154 00

REPLACE ENGINE EXHAUST ELBOWS AND DOUBLE FLEX JOINT 0149 00

THIS WORK PACKAGE COVERS:

Removal (page 0149 00-1).
Installation (page 0149 00-3).

INITIAL SETUP:

Maintenance Level
Unit

Tools and Special Tools
General Mechanic's Tool Kit (WP 0397 00, Item 64)
Torque Wrench (WP 0397 00, Item 77)

Materials/Parts
Gasket (2)

Personnel Required
Unit Mechanic 63T10

References
TM 9-2350-366-10-1

Equipment Condition
Engine stopped (TM 9-2350-366-10-1)
Carrier blocked (TM 9-2350-366-10-1)
Power plant rear access panel removed (WP 0309 00)
Driver's power plant access panel removed (WP 0312 00)
Power plant grill raised (WP 0335 00)

REMOVAL

WARNING

Hot parts can burn you.

Allow parts to cool before working on or near them. If necessary, use heat protective gloves to work on hot parts.

1. LOOSEN TWO V-CLAMPS (3) THAT SECURE DOUBLE FLEX JOINT (5) TO EXHAUST ELBOWS (8) AND (2).

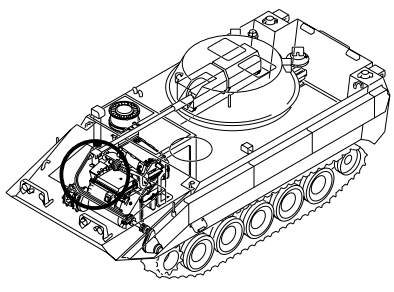

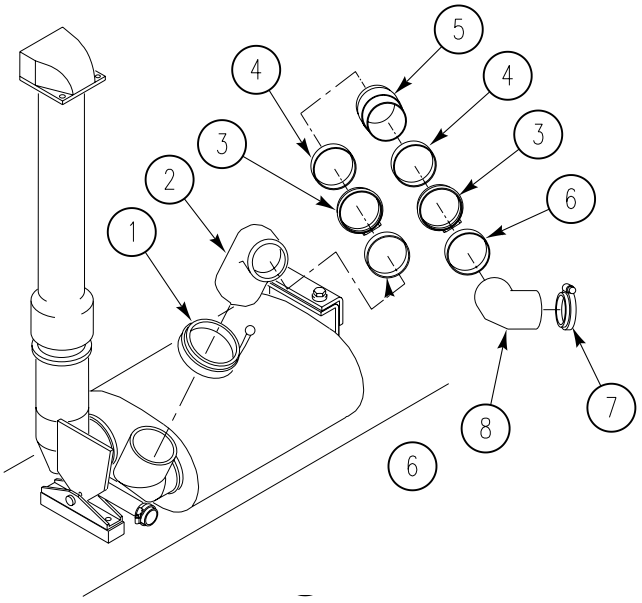

REPLACE ENGINE EXHAUST ELBOWS AND DOUBLE FLEX JOINT — Continued **0149 00**

2. REMOVE CLAMP (7) FROM ELBOW (8) AND ENGINE TURBOCHARGER. REMOVE ELBOW FROM TURBOCHARGER.
3. REMOVE CLAMP (1) FROM ELBOW (2) AND MUFFLER (9). REMOVE ELBOW FROM MUFFLER.
4. REMOVE TWO V-CLAMPS (3) AND DOUBLE FLEX JOINT (5) FROM ELBOWS (8) AND (2).
5. REMOVE TWO V-CLAMPS (3), GASKETS (4), AND RETAINERS (6) FROM DOUBLE FLEX JOINT (5). DISCARD GASKETS.

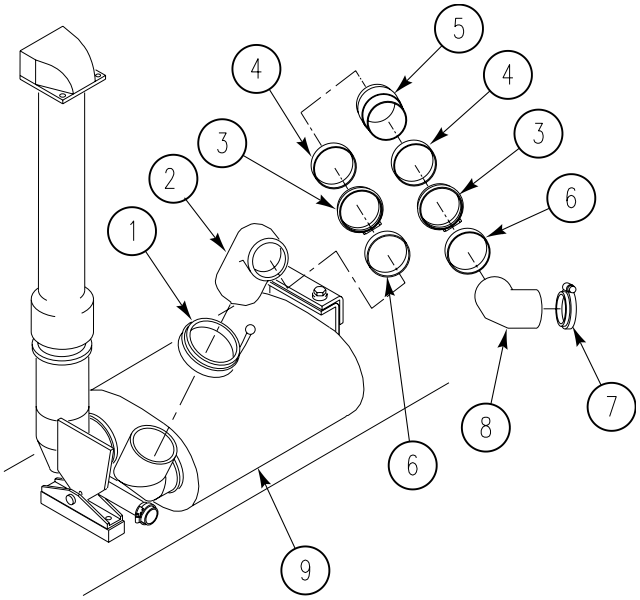

INSTALLATION

1. INSTALL ELBOW (2) AND CLAMP (1) ON MUFFLER (9).
2. INSTALL TWO V-CLAMPS (3), NEW GASKETS (4), AND RETAINERS (6) ON DOUBLE FLEX JOINT (5).
3. INSTALL DOUBLE FLEX JOINT (5) AND TWO CLAMPS (3) ON ELBOWS (2) AND (8).
4. INSTALL ELBOW (8) AND CLAMP (7) ON TURBOCHARGER. TIGHTEN CLAMPS (1) AND (7).
5. RAP CLAMP FIRMLY WITH MALLET WHILE TIGHTENING NUT AND BOLT ON TWO CLAMPS (3). TIGHTEN NUT TO 36-53 LB-IN (4-6 N m) TORQUE.

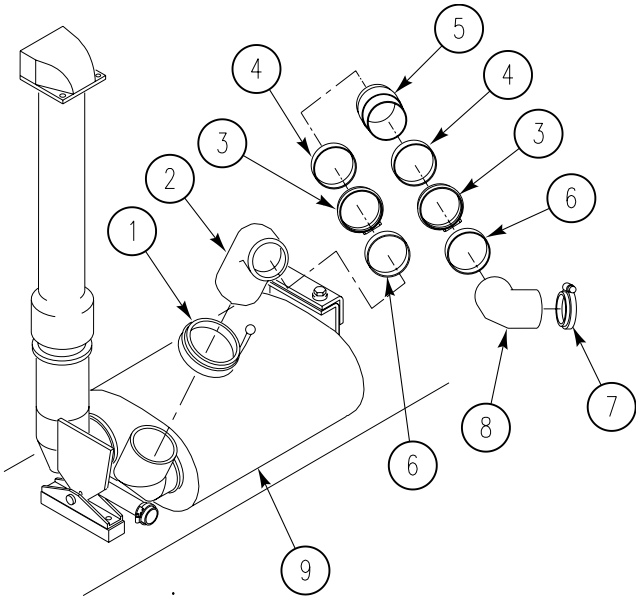

6. LOWER POWER PLANT GRILL (WP 0335 00).
7. INSTALL POWER PLANT FRONT ACCESS PANEL (WP 0316 00).
8. INSTALL FRONT VISMOD ASSEMBLY (WP 0307 00).

END OF TASK

REPAIR DOUBLE FLEX EXHAUST JOINT 0150 00

THIS WORK PACKAGE COVERS:

Removal (page 0150 00-1).
Installation (page 0150 00-2).

INITIAL SETUP:

Maintenance Level
Unit

Tools and Special Tools
General Mechanic's Tool Kit (WP 0397 00, Item 64)

Materials/Parts
Gasket (2)

Personnel Required
Unit Mechanic 63T10

References
TM 9-2350-366-10-1

Equipment Condition
Engine stopped (TM 9-2350-366-10-1)
Vehicle blocked (TM 9-2350-366-10-1)
Double flex joint removed (WP 0149 00)

REMOVAL

NOTE

The double flex exhaust joint can be repaired by replacing the clamp, gasket, or retainer.

1. REMOVE TWO CLAMPS (1), GASKET RETAINERS (2), AND GASKETS (3) FROM DOUBLE FLEX JOINT (4). DISCARD GASKETS.

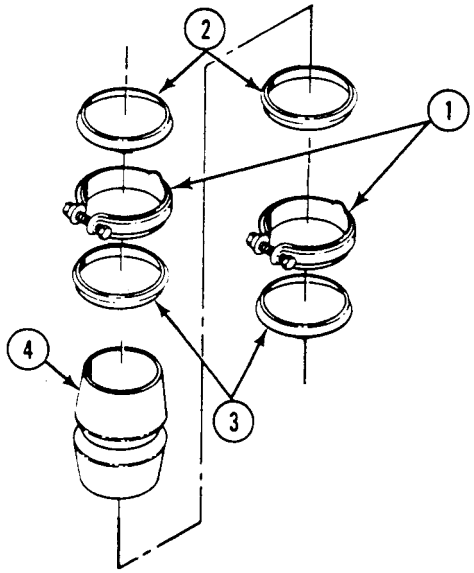

INSTALLATION

1. INSTALL TWO CLAMPS (1), GASKET RETAINERS (2), AND NEW GASKETS (3) ON DOUBLE FLEX JOINT (4).

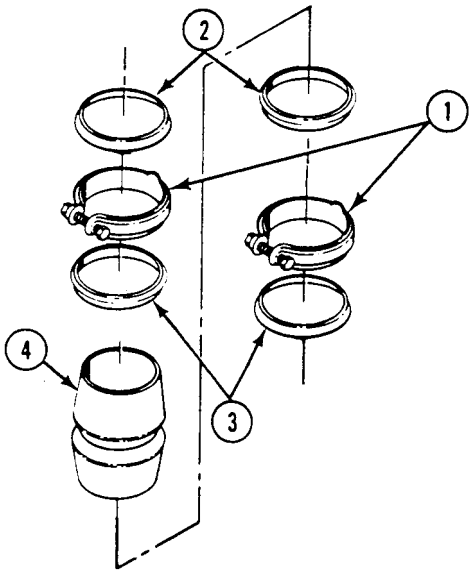

2. INSTALL DOUBLE FLEX JOINT (WP 0149 00).

END OF TASK

REPLACE MUFFLER EXTENSION AND CAP 0151 00

THIS WORK PACKAGE COVERS:

Removal (page 0151 00-2).
Installation (page 0151 00-3).

INITIAL SETUP:

Maintenance Level

Unit

Tools and Special Tools

General Mechanic's Tool Kit (WP 0397 00, Item 64)

Materials/Parts

Lockwasher (4)

Personnel Required

Unit Mechanic 63T10

References

TM 9-2350-366-10-1

Equipment Condition

Engine stopped (TM 9-2350-366-10-1)
Carrier blocked (TM 9-2350-366-10-1)
Trim vane lowered (TM 9-2350-366-10-1)
Front VISMOD access doors removed (WP 0307 00)
Engine access cover plate removed (WP 0308 00)

REMOVAL

WARNING

Hot parts can burn you.

Allow parts to cool before working on or near them. If necessary, use heat protective gloves to work on hot parts.

1. REMOVE FOUR SCREWS (4), LOCKWASHERS (3) AND WASHERS (2) THAT SECURE EXHAUST EXTENSION PIPE (1) TO POWER PLANT GRILL. REMOVE PIPE FROM GRILL AND MUFFLER (5). DISCARD LOCKWASHERS.

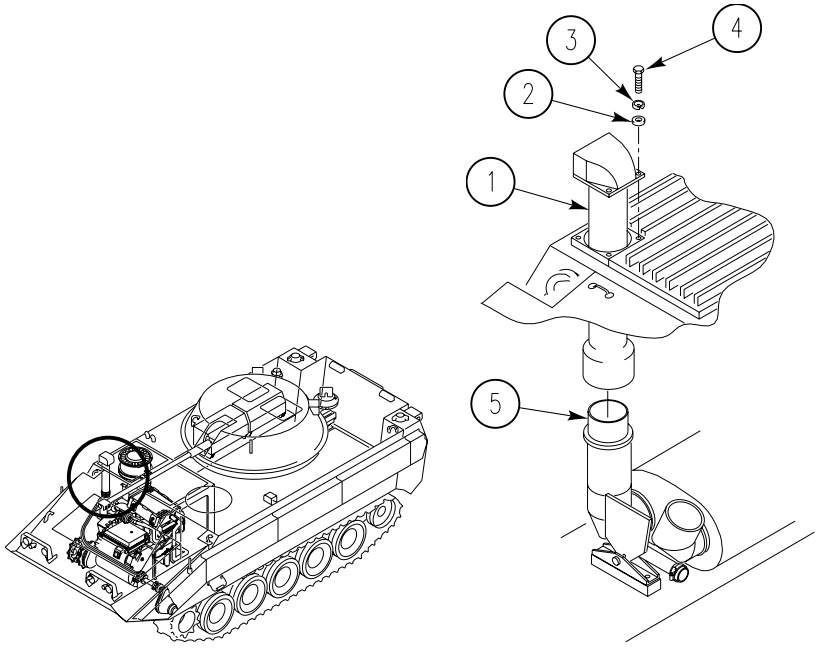

INSTALLATION

1. INSTALL EXTENSION PIPE (1) ON MUFFLER (5) AND GRILL. SECURE WITH FOUR WASHERS (2), LOCKWASHERS (3), AND SCREWS (1).

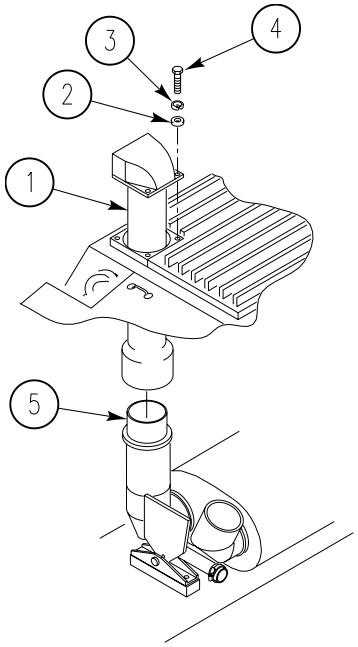

2. START ENGINE. See TM 9-2350-366-10-1.
3. CHECK FOR LEAKS. See TM 9-2350-366-10-1.
4. STOP ENGINE. See TM 9-2350-366-10-1.
5. INSTALL POWER PLANT FRONT ACCESS PANEL (WP 0309 00).
6. INSTALL FRONT VISMOD ACCESS PANEL (WP 0316 00).

END OF TASK

REPLACE EXHAUST MUFFLER AND BRACKET 0152 00

THIS WORK PACKAGE COVERS:

Removal (page 0152 00-1).
Installation (page 0152 00-2).

INITIAL SETUP:

Maintenance Level

Unit

Tools and Special Tools

General Mechanic's Tool Kit (WP 0397 00, Item 64)

Materials/Parts

Cotter pin
Locknut (2)
Lockwasher (2)

Personnel Required

Unit Mechanic 63T10

References

TM 9-2350-366-10-1

Equipment Condition

Engine stopped (TM 9-2350-366-10-1)
Carrier blocked (TM 9-2350-366-10-1)
Power plant rear access panel removed (WP 0309 00)
Driver's power plant access panel removed (WP 0312 00)
Power plant grill raised (WP 0335 00)
Exhaust elbows removed (WP 0153 00)
Muffler extension and cap removed (WP 0151 00)

REMOVAL

1. REMOVE TWO SCREWS (3), FOUR WASHERS (2), AND TWO LOCKNUTS (4) THAT SECURE MUFFLER (1) TO BRACKET ON HULL. DISCARD LOCKNUTS.

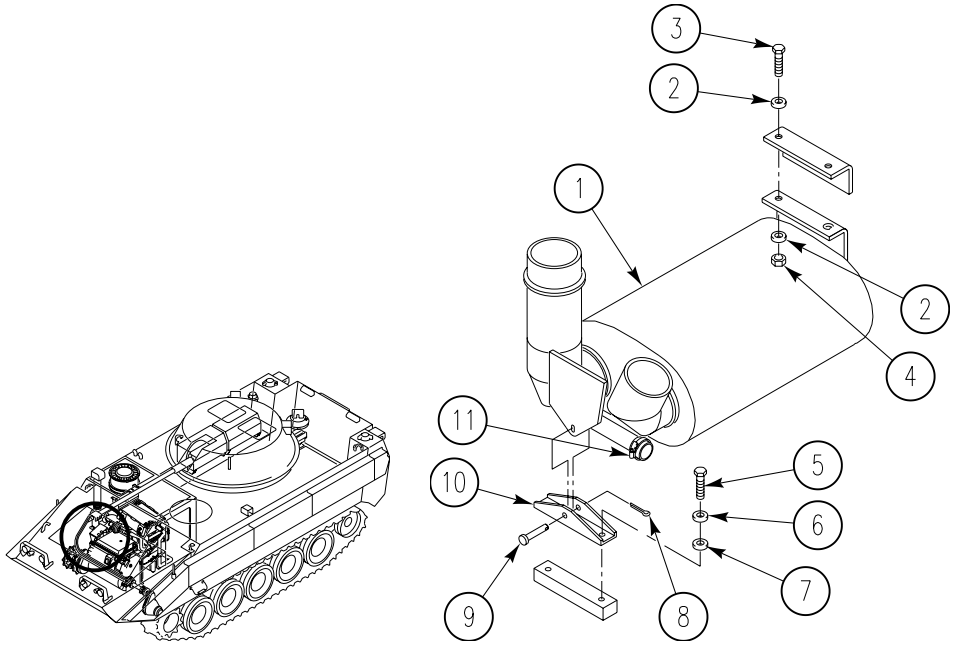

2. LOOSEN CLAMP (11) SECURING MUFFLER (1) TO CONNECTOR ON AIR CLEANER.
3. REMOVE TWO SCREWS (5), LOCKWASHERS (6), AND WASHERS (7) THAT SECURE BRACKET (10) TO SPONSON. REMOVE MUFFLER (1) FROM CARRIER. DISCARD LOCKWASHERS.
4. REMOVE COTTER PIN (8) AND STRAIGHT HEADED PIN (9) FROM MUFFLER (1) AND BRACKET (10). REMOVE BRACKET. DISCARD COTTER PIN.

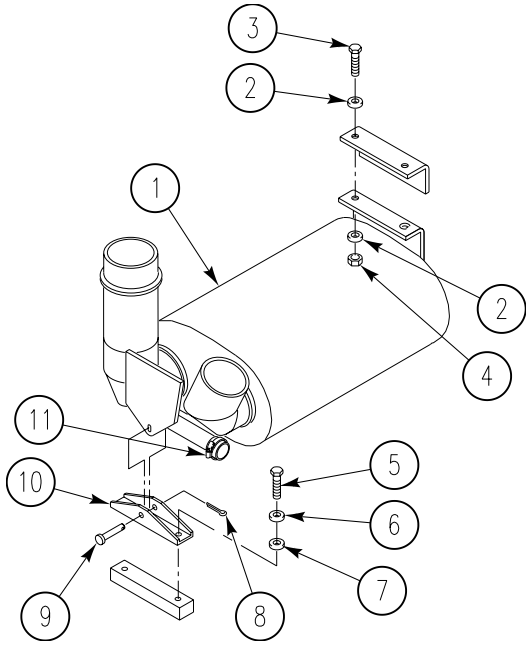

INSTALLATION

1. INSTALL BRACKET (10) ON MUFFLER (1) WITH PIN (9) AND NEW COTTER PIN (8).
2. INSTALL MUFFLER (1) IN CARRIER. SECURE MUFFLER AND BRACKET (10) TO SPONSON WITH TWO SCREWS (5), NEW LOCKWASHERS (6), AND WASHERS (7).
3. TIGHTEN CLAMP (11) SECURING MUFFLER (1) TO CONNECTOR ON AIR CLEANER.
4. SECURE MUFFLER (1) TO HULL BRACKET WITH TWO SCREWS (3), FOUR WASHERS (2), AND TWO NEW LOCKNUTS (4).
5. INSTALL EXHAUST ELBOWS (WP 0153 00).
6. INSTALL MUFFLER EXTENSION AND CAP (WP 0151 00).
7. LOWER POWER PLANT GRILL (WP 0335 00).
8. INSTALL POWER PLANT FRONT ACCESS PANEL (WP 0309 00).
9. INSTALL POWER PLANT FRONT ACCESS PANEL (WP 0309 00).

END OF TASK

REPLACE ENGINE LEFT/RIGHT EXHAUST ELBOWS 0153 00

THIS WORK PACKAGE COVERS:

Removal (page 0153 00-1).
Installation (page 0153 00-2).

INITIAL SETUP:

Maintenance Level
Unit

Tools and Special Tools
General Mechanic's Tool Kit (WP 0397 00, Item 64)

Personnel Required
Unit Mechanic 63T10

References
TM 9-2350-366-10-1

Equipment Condition
Engine stopped (TM 9-2350-366-10-1)
Vehicle blocked (TM 9-2350-366-10-1)
Engine access cover plate removed (WP 0308 00)
Air cleaner removed to access right elbow (WP 0139 00)
Driver's compartment access panel removed (WP 0312 00)
Power plant rear access panels removed (WP 0309 00)
Front VISMOD access doors removed (WP 0307 00)

REMOVAL

1. REMOVE TWO CLAMPS (5) FROM EXHAUST INLET TUBE (6).

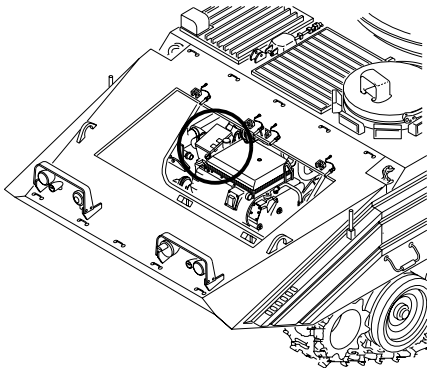

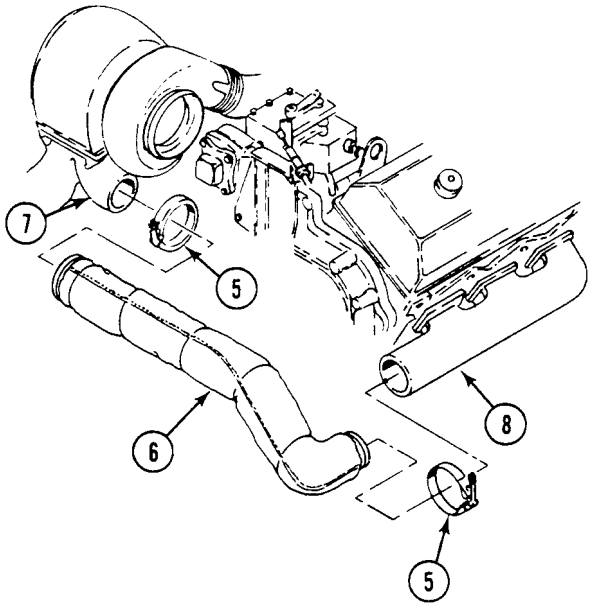

2. REMOVE EXHAUST INLET TUBE (6) FROM INLET TEE (7) AND EXHAUST MANIFOLD (8).

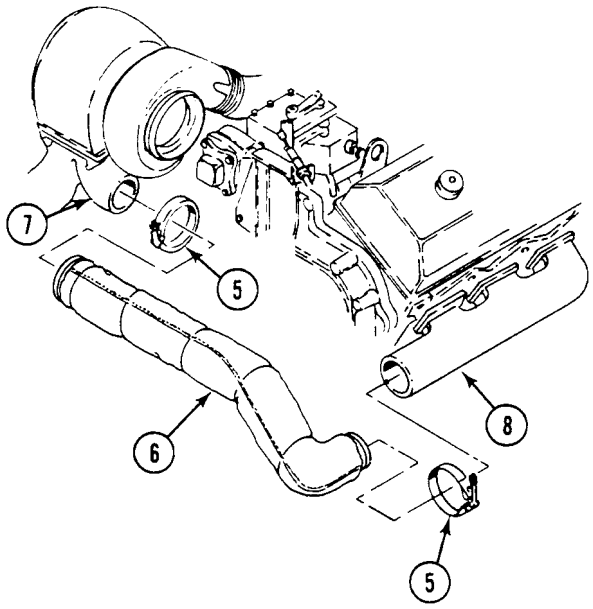

3. REMOVE TURBO EXHAUST PIPE HEAT SHIELD (WP 0327 00).

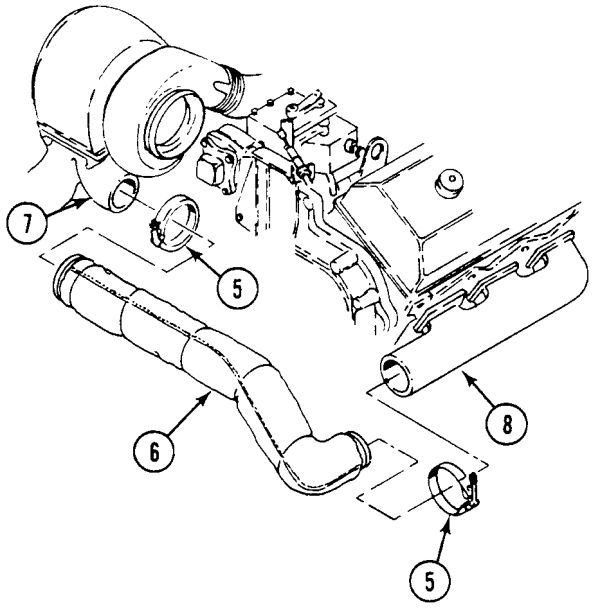

INSTALLATION

NOTE

Left elbow is shown only.

1. INSTALL TURBO EXHAUST PIPE HEAT SHIELD (WP 0327 00).

2. INSTALL EXHAUST INLET TUBE (6) ON INLET TEE (7) AND EXHAUST MANIFOLD (8).

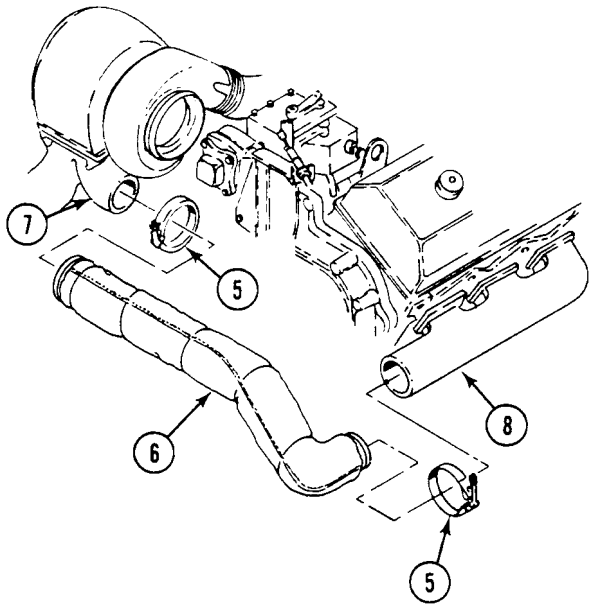

3. INSTALL AND TIGHTEN TWO CLAMPS (4) ON EXHAUST INLET TUBE (1).
4. INSTALL ELBOW HOSE (5) ON TURBO (6) AND AIR CLEANER (7). SECURE WITH TWO CLAMPS (8).

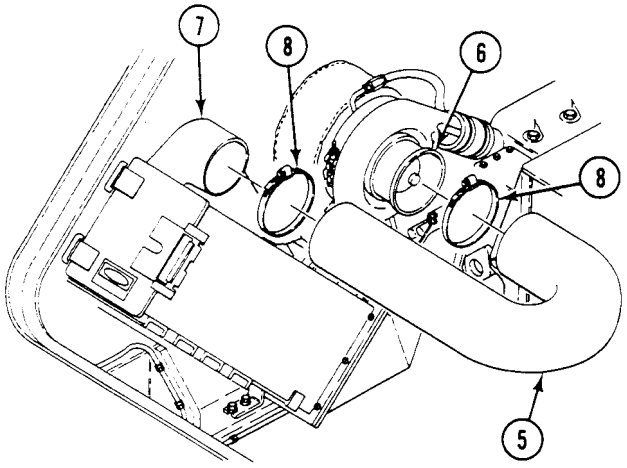

5. INSTALL AIR CLEANER, IF NECESSARY (WP 0327 00).
6. INSTALL DRIVER'S COMPARTMENT ACCESS PANEL (WP 0312 00).
7. CLOSE POWER PLANT FRONT ACCESS PANEL (WP 0308 00).

END OF TASK

REPLACE LEFT/RIGHT TURBO EXHAUST PIPE HEAT SHIELD 0154 00

THIS WORK PACKAGE COVERS:

Removal (page 0154 00-1).
Installation (page 0154 00-3).

INITIAL SETUP:

Maintenance Level
Unit

Tools and Special Tools
General Mechanic's Tool Kit (WP 0397 00, Item 64)

Materials/Parts
Nonelectrical wire (WP 0399 00, Item 40)

Personnel Required
Unit Mechanic 63T10

References
TM 9-2350-366-10-1

Equipment Condition
Engine stopped (TM 9-2350-366-10-1)
Vehicle blocked (TM 9-2350-366-10-1)
Front VISMOD access doors removed (WP 0307 00)
Engine access cover plate (WP 0308 00)
Air cleaner removed if working on right elbow (WP 0139 00)
Driver's compartment access panel removed if working on left elbow (WP 0312 00)
Power plant rear acess panels removed (WP 0309 00)

REMOVAL

WARNING

Sharp edge safety wire can cut your fingers. Make sure to twist end of wire and bend back close to the attaching hole.

NOTE

Left and right insulation covers are removed and installed the same way. Left insulation cover is shown only.

REPLACE LEFT/RIGHT TURBO EXHAUST PIPE HEAT SHIELD — Continued 0154 00

1. CUT AND REMOVE WIRE (1) CONNECTING CAPSTANS (2) ON INSULATION COVER (3). DISCARD WIRE.
2. REMOVE INSULATION COVER (3) FROM EXHAUST TUBE (4).

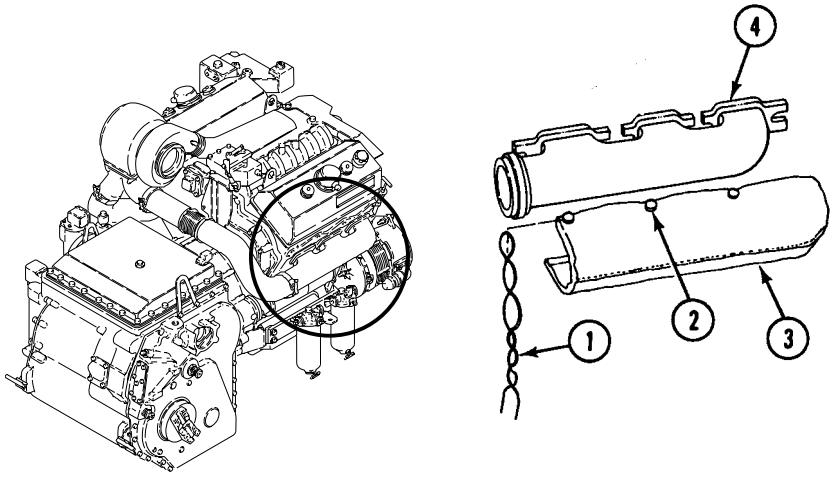

INSTALLATION

1. WRAP NEW INSULATION COVER (3) AROUND EXHAUST TUBE (4).

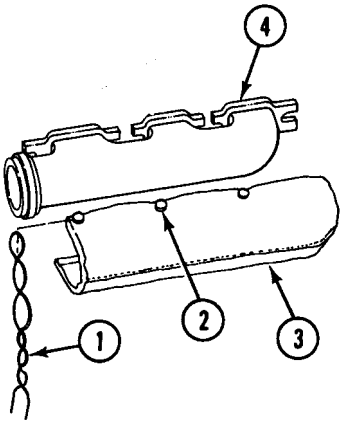

2. CUT NEW WIRE (1) TO APPROPRIATE LENGTH AND MAKE TWO LOOPS AT THE MIDDLE OF LENGTH AROUND CAPSTAN (2) ON ONE HALF OF INSULATION COVER (3).
3. PULL WIRE ENDS (1) TOWARD CORRESPONDING CAPSTAN (2) ON OTHER HALF OF COVER (3). TWIST ONE WIRE AROUND OTHER TO FORM A FIGURE EIGHT.
4. CROSS ENDS OF WIRE (1) BEHIND SECOND CAPSTAN (2).
5. WIND WIRE ENDS (1) TO APPROXIMATELY 3/4 INCH (19 MM) AND CUT OFF.

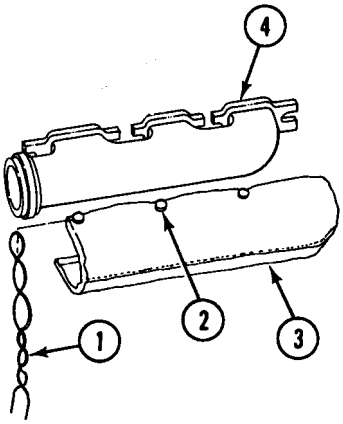

6. BEND ENDS BACK AROUND CAPSTAN HOLE (2).

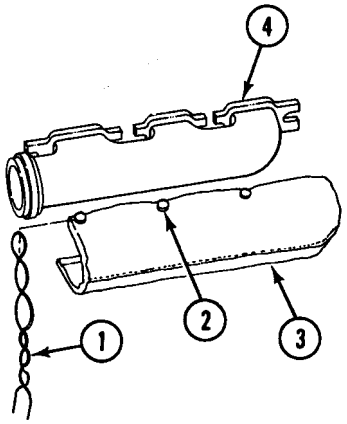

7. REPEAT Steps 2 - 6 TO TIE REMAINING SETS OF CAPSTANS (2) TOGETHER. CHECK TO MAKE SURE THAT SEAMS ARE FIRMLY PULLED TOGETHER.
8. INSTALL DRIVER'S COMPARTMENT ACCESS PANEL, IF NECESSARY (WP 0312 00)
9. INSTALL AIR CLEANER, IF NECESSARY (WP 0139 00).
10. INSTALL POWER PLANT FRONT ACCESS PANEL. SEE (WP 0308 00).
11. INSTALL FRONT VISMOD ACCESS PANEL (WP 0307 00).

END OF TASK

CHAPTER 8

UNIT MAINTENANCE INSTRUCTIONS FOR RADIATOR AND EXPANSION TANK

WORK PACKAGE INDEX

Title	Sequence No.
DRAIN AND FILL COOLING SYSTEM	0155 00
CLEAN RADIATOR	0156 00
REPLACE RADIATOR AND PARTS	0157 00
REPLACE AUXILIARY TANK	0158 00

DRAIN AND FILL COOLING SYSTEM 0155 00

THIS WORK PACKAGE COVERS:

Drain cooling system (page 0155 00-1).
Fill cooling system (page 0155 00-3).

INITIAL SETUP:

Maintenance Level

Unit

Tools and Special Tools

General Mechanic's Tool Kit: Automotive (WP 0397 00, Item 64)
Radiator Filling Can (WP 0397 00, Item 12)
Suitable Container (14 gallon)

Materials/Parts

Antifreeze (WP 0399 00, Item 9)

Personnel Required

Unit Mechanic 63T10

References

TM 9-2350-366-10-1
TM 9-2350-366-10-2

Equipment Condition

Engine stopped (TM 9-2350-366-10-1)
Vehicle blocked (TM 9-2350-366-10-1)
Turret rotated to 3200 mils (TM 9-2350-366-10-2)
Power plant rear access panel removed (WP 0309 00)
Driver's power plant access panel removed (WP 0312 00)
Power plant bottom access cover removed (WP 0316 00)

SERVICING

DRAIN COOLING SYSTEM

WARNING

Hot coolant can burn you. Do not remove radiator cap until coolant temperature gauge reads in bottom one-quarter of green zone. Use heat protective mittens to turn radiator cap. Turn cap slowly to release pressure.

CAUTION

Coolant in the cooling system must flow freely. If rust, scale, or sediment prevent the free flow of coolant, flush system per TB 750-651. This is to be done only as necessary.

DRAIN AND FILL COOLING SYSTEM — Continued **0155 00**

1. OPEN COOLANT FILLER CAP COVER (6) ON POWER PLANT GRILL (7).
2. REMOVE COOLANT FILLER CAP (4) FROM AUXILIARY TANK (5).
3. PLACE CLEAN CONTAINER UNDER ENGINE COMPARTMENT BOTTOM ACCESS OPENING.

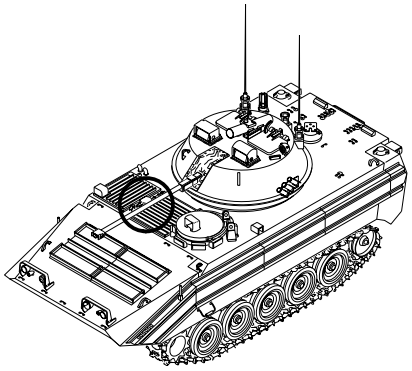

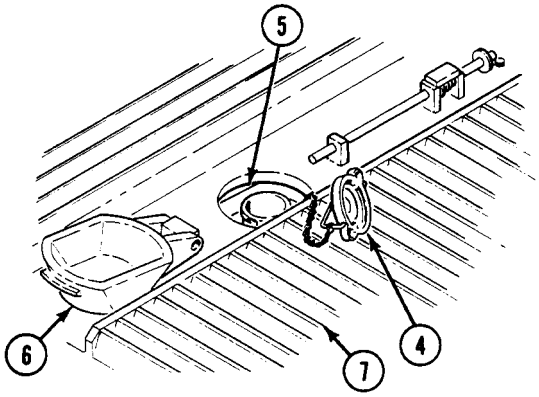

4. ROUTE END OF DRAIN HOSE (1) ENGINE COMPARTMENT BOTTOM ACCESS OPENING.

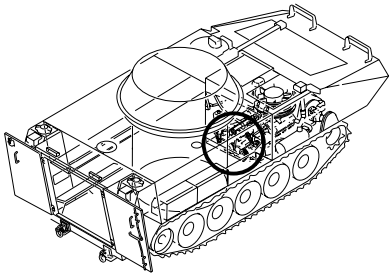

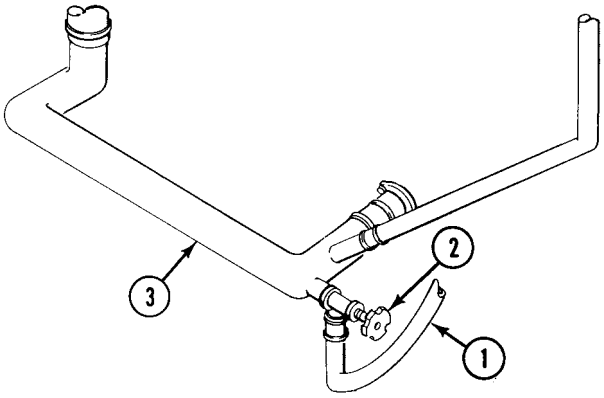

5. OPEN DRAIN COCK (2) AT RADIATOR OUTLET TUBE (3) AND DRAIN HOSE (1).
6. AFTER SYSTEM IS DRAINED, CLOSE DRAIN COCK (2) AND INSTALL ENGINE COMPARTMENT BOTTOM ACCESS OPENING. SAVE COOLANT FOR REUSE, UNLESS CHECK SHOWS COOLANT SHOULD BE CHANGED.

FILL COOLING SYSTEM

CAUTION

If not filling coolant system immediately, tag master switch to warn others that engine coolant has been drained.

NOTE

Use coolant in system at all times. It will reduce corrosion in engine block and cooling system parts. Ethylene glycol coolant will provide low temperature protection. Mix coolant and clean water base on protection label on container.

When filling the auxiliary tank, add coolant slowly to allow trapped air to escape.

1. FILL SYSTEM WITH COOLANT. BRING COOLANT LEVEL TO COLD MARK OF FILLER NECK.
2. INSTALL COOLANT FILLER CAP (4) ON RADIATOR AUXILIARY TANK (5).

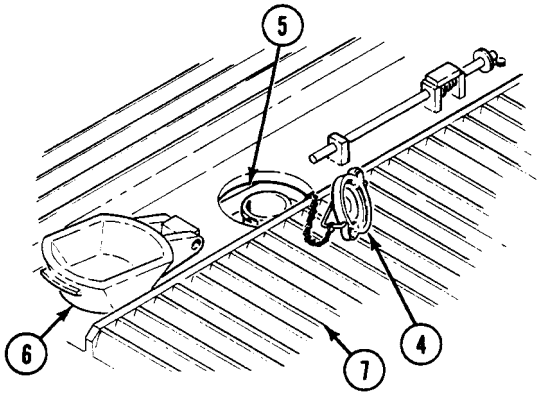

3. CLOSE COOLANT FILLER CAP COVER (6) ON POWER PLANT GRILL (7).

CAUTION

Do not operate engine if temperature is 230° F (110° C) or above. Serious engine damage will occur.

4. START AND RUN ENGINE UNTIL OPERATING TEMPERATURE OF 180° TO 230° F (82° TO 110° C) IS REACHED.

CAUTION

If engine coolant temperature gauge reading is above 230°F (110°C), stop engine and allow it to cool.

5. CHECK THE FOLLOWING FOR CAUSE OF ENGINE OVERHEATING.
   a. Make sure air cleaner is clean and installed right. See TM 9-2350-366-10-1.

b. Check fan belts for correct adjustment (WP 0147 00).

c. Check radiator and air intake grill air passages. Clean and remove debris preventing free movement of air.

d. Check engine oil level. Check for right grade of oil. See TM 9-2350-366-10-1.

WARNING

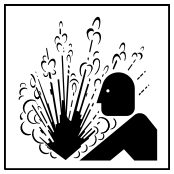

Hot coolant can burn you. Do not remove radiator cap until coolant temperature gauge reads in bottom one-quarter of green zone. Use heat protective mittens to turn radiator cap. Turn cap slowly to release pressure.

6. ADD COOLANT AS NECESSARY TO BRING LEVEL TO COLD MARK OF FILLER NECK (1). CHECK FOR LEAKS.

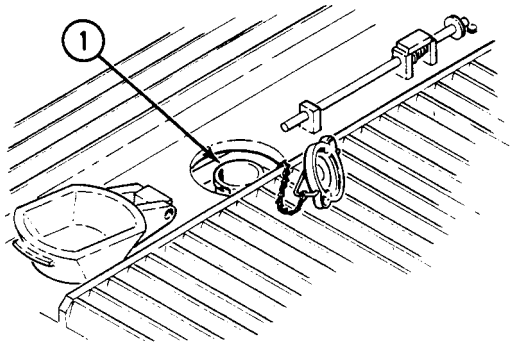

7. INSTALL POWER PLANT BOTTOM ACCESS COVER (WP 0316 00).
8. INSTALL POWER PLANT LOWER REAR ACCESS PANEL (WP 0309 00).
9. ROTATE TURRET TO 3200 MILS. See TM 9-2350-366-10-2.

END OF TASK

CLEAN RADIATOR 0156 00

THIS WORK PACKAGE COVERS:

Cleaning (page 0156 00-1).

INITIAL SETUP:

Maintenance Level

Unit

Tools and Special Tools

General mechanic's tool kit: automotive (WP 0397 00, Item 64)
Radiator cleaning tool (WP 0397 00, Item 13)
Suitable container

Materials/Parts

General purpose detergent (WP 0399 00, Item 33)

Personnel Required

Unit Mechanic 63T10

References

TM 9-2350-366-10-1
TM 9-2350-366-10-2

Equipment Condition

Engine stopped (TM 9-2350-366-10-1)
Vehicle blocked (TM 9-2350-366-10-1)
Turret rotated to 3200 mils (TM 9-2350-366-10-2)
Power plant rear access panel removed (WP 0309 00)
Driver's power plant access panel removed (WP 0312 00)
Cooling system drained (WP 0155 00)
Front VISMOD access doors removed (WP 0307 00)
Engine access cover plate removed (WP 0308 00)

CLEANING

1. LOOSE TWO BOLTS (1) AND CLAMPS (2). REMOVE RADIATOR ACCESS PANEL (3) FROM POWER PLANT COMPARTMENT BULKHEAD.

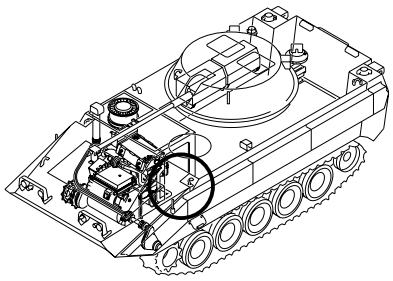

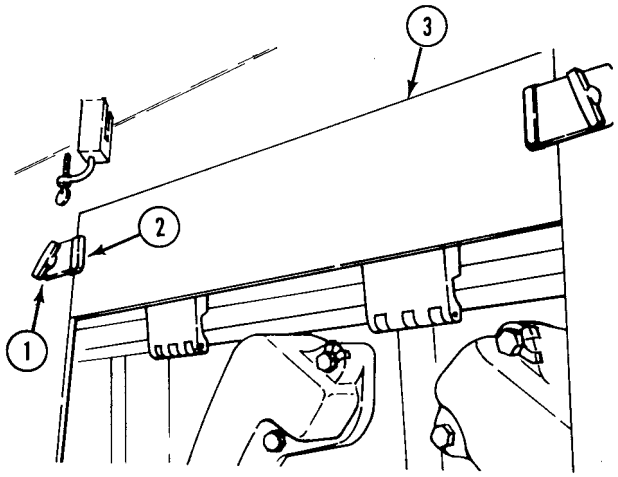

2. RELEASE TWO FASTENERS (4) SECURING RADIATOR ACCESS DOOR (5). OPEN DOOR.

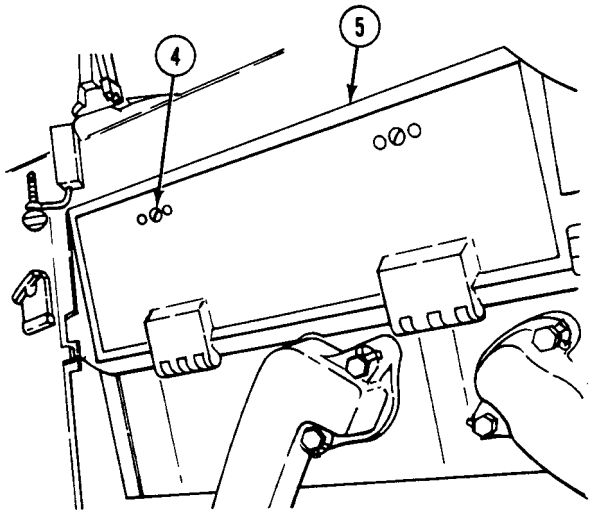

3. COVER EXPOSED ENGINE OPENINGS.
4. MIX ONE PART DETERGENT TO FIVE PARTS WATER IN A CLEAN CONTAINER.
5. SUBMERGE END OF RADIATOR CLEANER SIPHON TUBE IN DETERGENT SOLUTION.

WARNING

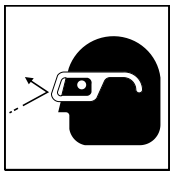

Compressed air can injure you or others.

Do not aim compressed air at yourself or other personnel. Always wear goggles when working with compressed air. Do not use more pressure than 30 psi (207kPa) with air nozzles.

6. ATTACH RADIATOR CLEANING TOOL TO AVAILABLE AIR SUPPLY.
7. CLEAN SAND, OIL, AND DEBRIS FROM RADIATOR.
8. RINSE RADIATOR WITH CLEAN WATER.
9. REMOVE SIPHON HOSE FROM DETERGENT SOLUTION.

10. REMOVE EXCESS WATER WITH AVAILABLE AIR SUPPLY.

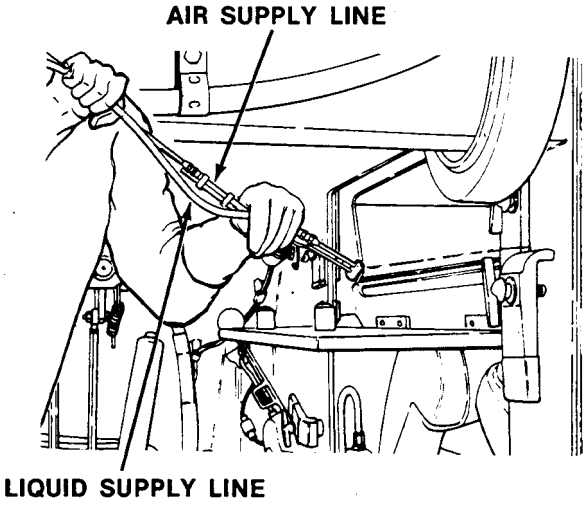

11. UNCOVER EXPOSED ENGINE OPENINGS.
12. SECURE RADIATOR ACCESS DOOR (1) TO RADIATOR OPENING WITH TWO FASTENERS (2).

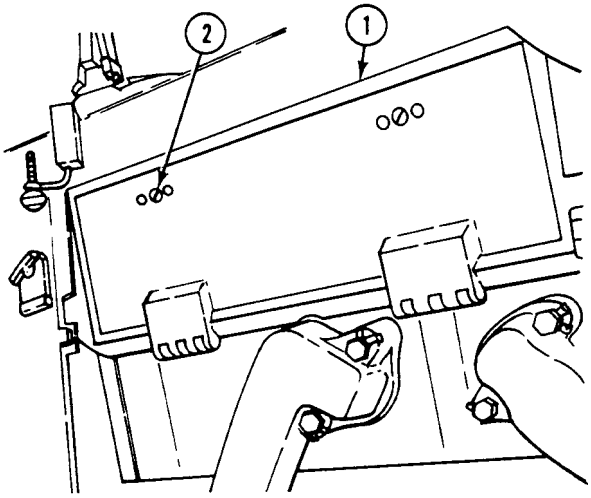

13. INSTALL POWER PLANT BOTTOM ACCESS COVER (WP 0316 00).
14. INSTALL DRIVERS POWER PLANT ACCESS PANEL (WP 0312 00).
15. INSTALL POWER PLANT REAR ACCESS PANEL (WP 0309 00).
16. INSTALL POWER PLANT FRONT ACCESS PANEL.
17. INSTALL FRONT VISMOD ACCESS PANEL (WP 0307 00).
18. ROTATE TURRET TO 6400 MILS. See TM 9-2350-366-10-2.

.

END OF TASK

REPLACE RADIATOR AND PARTS 0157 00

THIS WORK PACKAGE COVERS:

Removal (page 0157 00-1).
Installation (page 0157 00-4).

INITIAL SETUP:

Maintenance Level

Unit

Tools and Special Tools

General mechanics tool kit: automotive (WP 0397 00, Item 64)
Socket wrench set (WP 0397 00, Item 70)
Torque wrench (WP 0397 00, Item 79)

Materials/Parts

Adhesive (WP 0399 00, Item 4)
Sealing compound (WP 0399 00, Item 55)
Sling (WP 0397 00, Item 47)
Gasket (2)
Mount (4)
Key washer (4)

Personnel Required

Unit Mechanic 63T10
Helper (H)

References

TM 9-2350-366-10-1
TM 9-2350-366-10-2

Equipment Condition

Engine stopped (TM 9-2350-366-10-1)
Vehicle blocked (TM 9-2350-366-10-1)
Front power plant access doors opened (TM 9-2350-366-10-1)
Turret rotated to 3200 mils (TM 9-2350-366-10-2)
Driver's power plant access panel removed (WP 0312 00)
Power plant rear access panel removed (WP 0309 00)
Power plant grill removed (WP 0335 00)
Grill intake elbow and hose removed (WP 0145 00)
Remove hull nose assembly (WP 0313 00)
Balance hose removed (WP 0162 00)
Front VISMOD access panel removed (WP 0307 00)
Engine access cover platel removed (WP 0308 00)

REMOVAL

WARNING

Radiator is heavy and can cause back injury if handled improperly. Be sure to use a hoist and helper to remove radiator.

1. ATTACH SLING TO LIFTING DEVICE OF AT LEAST 150 LB (68 KG) CAPACITY TO RADIATOR SUPPORT LIFTING EYES (1). REMOVE 6 NUTS (2), 16 WASHERS (3), AND 10 SCREWS (4) THAT SECURE RADIATOR SUPPORTS (5) TO 2 PLATES (6) AND TO POWER PLANT GRILL (7). LIFT RADIATOR SUPPORTS AND

RADIATOR (8) FROM POWER PLANT GRILL. LOWER RADIATOR TO A WORK TABLE OR FLAT WOODEN PLATE AND DETACH LIFTING DEVICE. HAVE HELPER ASSIST.

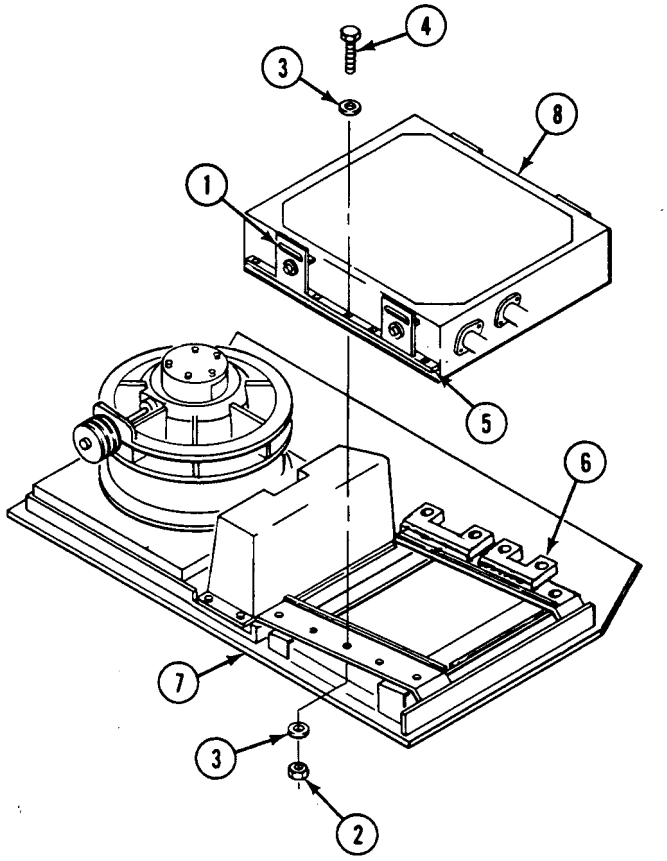

2. REMOVE TWO END SEALS (1) FROM POWER PLANT GRILL (2).

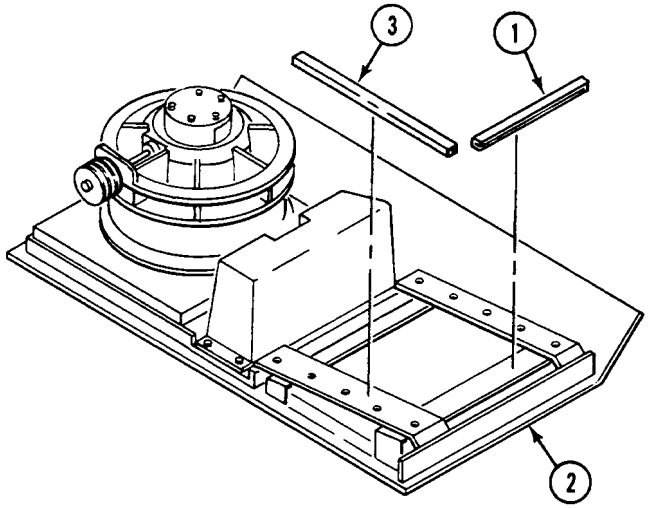

3. REMOVE TWO SIDE SEALS (3) FROM POWER PLANT GRILL (2).

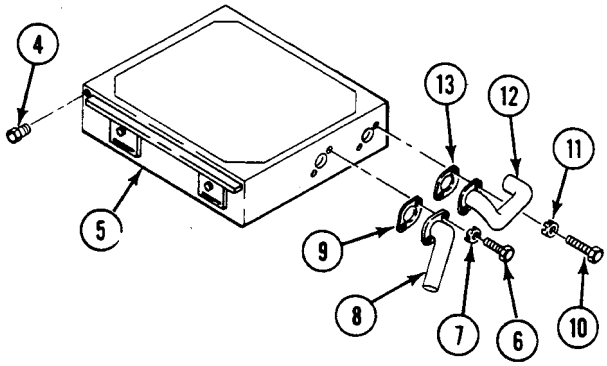

4. REMOVE BALANCE HOSE ADAPTER (4) FROM RADIATOR (5).

5. REMOVE TWO SCREWS (6), KEY WASHERS (7), RADIATOR OUTLET ELBOW (8), AND GASKET (9) FROM RADIATOR (5). DISCARD GASKET AND WASHERS.

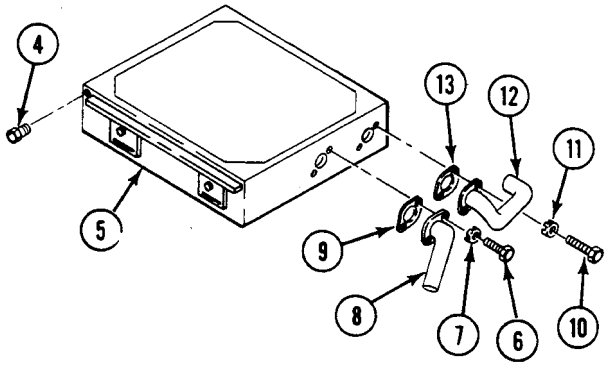

6. REMOVE TWO SCREWS (10), KEY WASHERS (11), RADIATOR INLET ELBOW (12), AND GASKET (13) FROM RADIATOR (5). DISCARD GASKET AND WASHERS.

7. REMOVE FOUR SCREWS (14), WASHERS (15), RADIATOR SUPPORTS (16), AND MOUNTS (17) FROM RADIATOR (18). DISCARD MOUNTS.

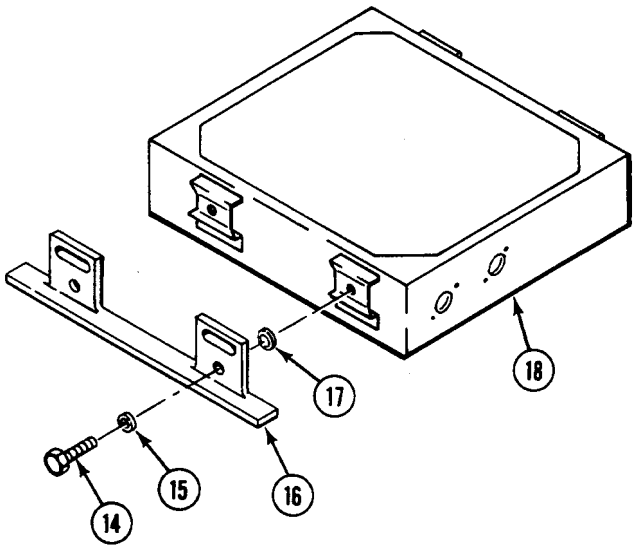

INSTALLATION

CAUTION

If installing a new radiator, make sure shipping plugs are removed.

1. LUBRICATE FOUR NEW MOUNTS (17) WITH WATER. INSTALL MOUNTS ON TWO RADIATOR SUPPORTS (16).

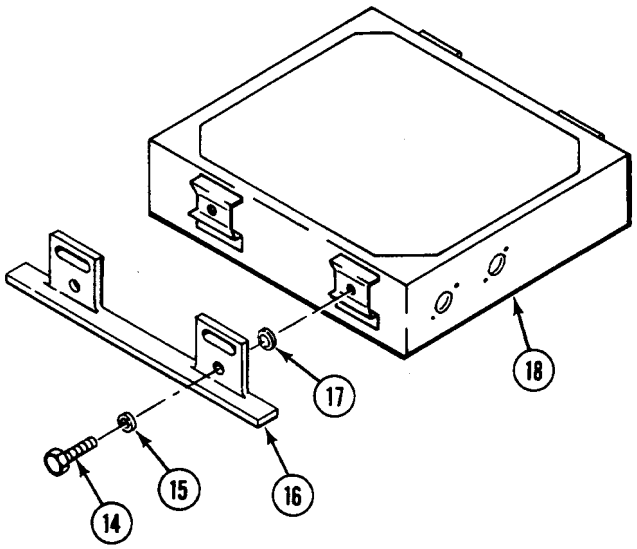

2. INSTALL TWO RADIATOR SUPPORTS (16) ON RADIATOR (18). SECURE WITH FOUR SCREWS (14) AND WASHERS (15). TIGHTEN SCREWS TO 360-420 LB-IN (41-48 N.M) TORQUE.

3. APPLY A THIN COAT OF SEALING COMPOUND TO BOTH SIDES OF NEW GASKETS (1) AND (8) AND EXTERNAL THREADS OF ADAPTER (2).

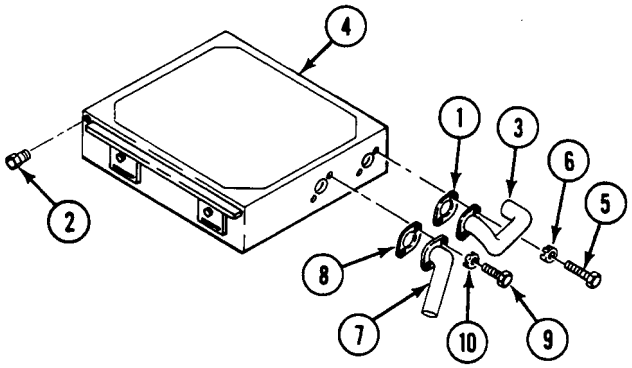

4. INSTALL RADIATOR INLET ELBOW (3) AND NEW GASKET (1) ON RADIATOR (4). SECURE WITH TWO SCREWS (5) AND NEW KEY WASHERS (6).
5. INSTALL RADIATOR OUTLET ELBOW (7) AND NEW GASKET (8) ON RADIATOR (4). SECURE WITH TWO SCREWS (9) AND NEW KEY WASHERS (10).
6. INSTALL BALANCE HOSE ADAPTER (2) ON RADIATOR (4).
7. APPLY THIN COAT OF ADHESIVE SEALANT TO MOUNTING SURFACES OF SEALS (11) AND (13).

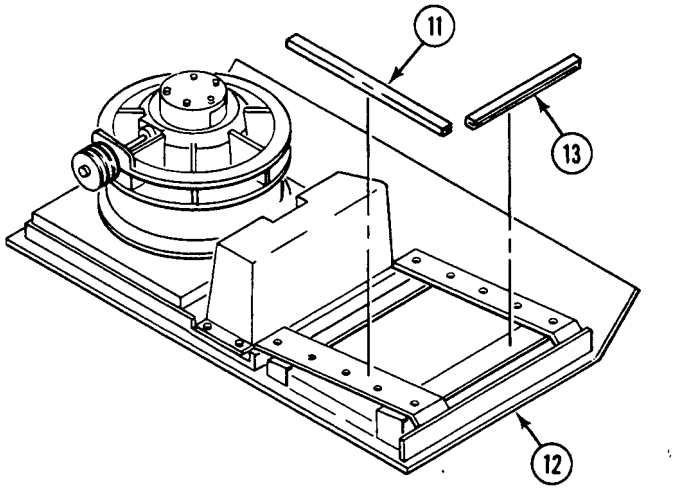

8. INSTALL TWO SIDE SEALS (11) ON POWER PLANT GRILL (12).
9. INSTALL TWO END SEALS (13) ON POWER PLANT GRILL (12).

10. ATTACH A LIFTING DEVICE OF AT LEAST 150 LB (68 KG) CAPACITY TO RADIATOR SUPPORT EYES (14). LIFT AND PLACE RADIATOR ON POWER PLANT GRILL (15) BETWEEN TWO END SEALS (13) AND SIDE SEALS (11).

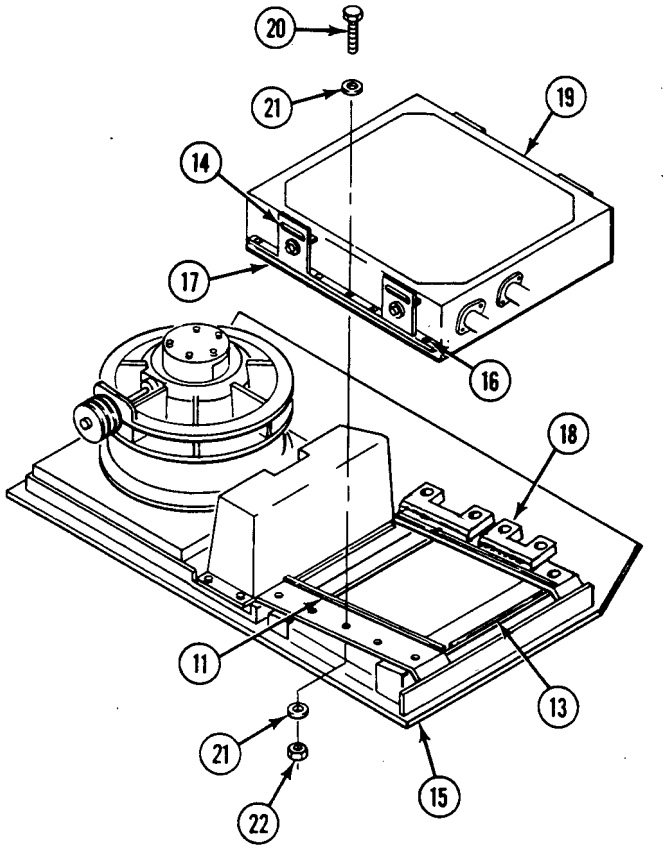

11. ALIGN MOUNTING HOLES (16) OF TWO RADIATOR SUPPORTS (17) TO TWO PLATES (18) AND POWER PLANT GRILL (15). SECURE RADIATOR (19) ON PLATES (18) WITH FOUR SCREWS (20) AND WASHERS (21). SECURE RADIATOR ON POWER PLANT GRILL WITH 6 SCREWS (20), 12 WASHERS (21), AND 6 NUTS (22).

12. INSTALL BALANCE HOSE (WP 0162 00).

13. INSTALL GRILL INTAKE ELBOW AND HOSE (WP 0145 00).

14. LOWER POWER PLANT GRILL (WP 0335 00).

15. INSTALL POWER PLANT REAR ACCESS PANEL (WP 0309 00).

16. INSTALL DRIVER'S POWER PLANT ACCESS PANEL (WP 0312 00).

17. INSTALL FRONT VISMOD ACCESS PANEL (WP 0307 00).

18. INSTALL HULL NOSE ASSEMBLY (WP 0313 00).

19. INSTALL POWER PLANT REAR UPPER ACCESS PANEL (WP 0309 00).

END OF TASK

REPLACE AUXILIARY TANK 0158 00

THIS WORK PACKAGE COVERS:

Removal (page 0158 00-1).
Installation (page 0158 00-2).

INITIAL SETUP:

Maintenance Level
Unit

Tools and Special Tools
General mechanic's tool kit: automotive (WP 0397 00, Item 64)
Torque wrench (WP 0397 00, Item 81)

Materials/Parts
Sealing compound (WP 0399 00, Item 55)
Gasket
Lockwasher (4)

Personnel Required
Unit Mechanic 63T10

References
TM 9-2350-366-10-1

Equipment Condition
Engine stopped (TM 9-2350-366-10-1)
Vehicle blocked (TM 9-2350-366-10-1)
Front power plant access doors removed (TM 9-2350-366-10-1)
Power plant grill removed (WP 0335 00)
Intake grill elbow and hose removed (WP 0145 00)
Balance hose removed (WP 0162 00)
Hull nose assembly removed (WP 0313 00)

REMOVAL

1. REMOVE FOUR SCREWS (1), WASHERS (2), AND AUXILIARY TANK (3) FROM POWER PLANT GRILL (4).

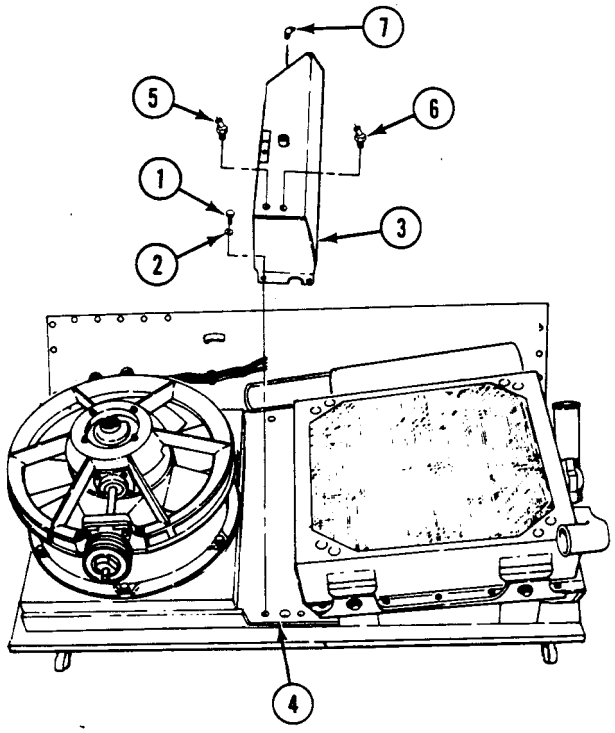

2. REMOVE THREE ELBOWS (5), (6) AND (7) FROM AUXILIARY TANK (3).

3. REMOVE SCREW (8), WASHER (9), LOCKWASHER (10), BRACKET (11), TWO HOOKS (12), AND FILLER CAP (13) FROM FILLER NECK (14). DISCARD LOCKWASHER.

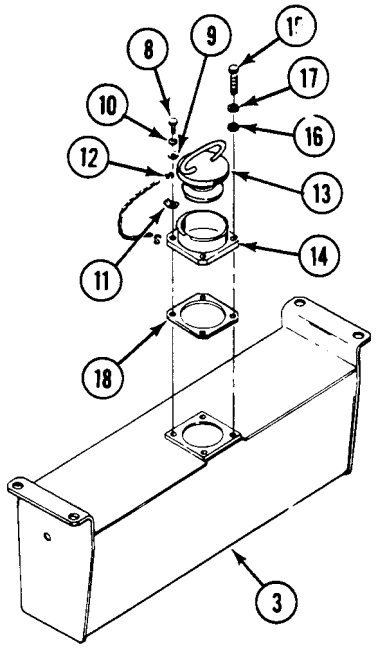

4. REMOVE THREE SCREWS (15), WASHERS (16), LOCKWASHERS (17), FILLER NECK (14), AND GASKET (18) FROM AUXILIARY TANK (3). DISCARD GASKET AND LOCKWASHERS.

INSTALLATION

1. APPLY THIN COAT OF SEALING COMPOUND TO BOTH SIDES OF NEW GASKET (1).

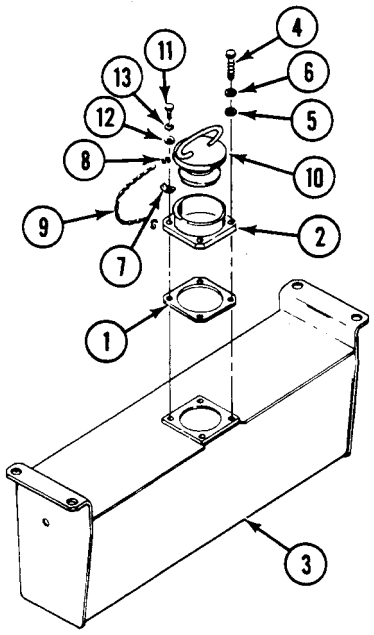

2. INSTALL GASKET (1) AND FILLER NECK (2) ON AUXILIARY TANK (3). SECURE WITH THREE SCREWS (4), WASHERS (5), AND NEW LOCKWASHERS (6).
3. INSTALL BRACKET (7), TWO HOOKS (8), CHAIN (9), AND FILLER CAP (10) ON FILLER NECK (2). SECURE WITH SCREW (11), WASHER (12), AND NEW LOCKWASHER (13).
4. APPLY THIN COAT OF SEALING COMPOUND TO EXTERNAL THREADS OF THREE ELBOWS (14), (15), AND (16).

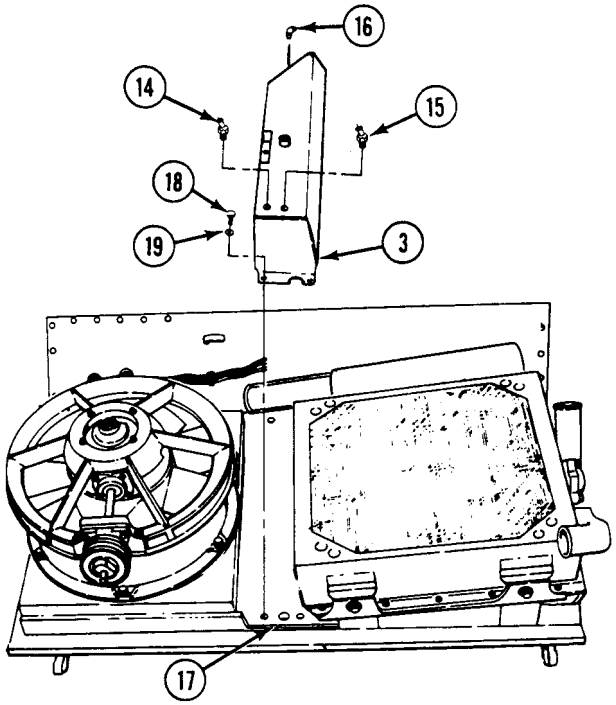

5. SECURE THREE ELBOWS (14), (15), AND (16) TO AUXILIARY TANK (3).
6. INSTALL AUXILIARY TANK (3) ON POWER PLANT GRILL (17). SECURE WITH FOUR SCREWS (18) AND WASHERS (19). TIGHTEN SCREWS TO 264-288 LB-IN (30-32 N·m) TORQUE.
7. INSTALL BALANCE HOSE (WP 0162 00).
8. INSTALL GRILL INTAKE ELBOW AND HOSE (WP 0145 00).
9. INSTALL POWER PLANT GRILL (WP 0335 00).
10. INSTALL FRONT POWER PLANT ACCESS DOOR. See TM 9-2350-366-10-1.
11. INSTALL HULL NOSE ASSEMBLY (WP 0313 00).

END OF TASK

CHAPTER 9

UNIT MAINTENANCE INSTRUCTIONS FOR HEADERS/THERMOSTATS/HOUSINGS

WORK PACKAGE INDEX

Title	Sequence No.
REPLACE THERMOSTATIC FAN SPEED SWITCH	0159 00
REPLACE UPPER COOLANT HOSE AND TUBE	0160 00
REPLACE RADIATOR OUTLET TUBE AND HOSE	0161 00
REPLACE BALANCE HOSE	0162 00
REPLACE DRAIN COCK AND HOSE	0163 00
REPLACE COOLANT AIR SEPARATOR	0164 00
REPLACE THERMOSTAT/COVER	0165 00
REPLACE THERMOSTAT TUBE/HOSES	0166 00

REPLACE THERMOSTATIC FAN SPEED SWITCH 0159 00

THIS WORK PACKAGE COVERS:

Removal (page 0159 00-1).
Installation (page 0159 00-2).

INITIAL SETUP:

Maintenance Level
Unit

Tools and Special Tools
General mechanic's tool kit (WP 0397 00, Item 64)

Materials/Parts
Sealing compound (WP 0399 00, Item 55)
Packing
Packing
Packing
Packing

Personnel Required
Unit mechanic 63T10

References
TM 9-2350-366-10-1
TM 9-2350-366-10-2

Equipment Condition
Engine stopped (TM 9-2350-366-10-1)
Carrier blocked (TM 9-2350-366-10-1)
Turret rotated to 3200 mils (TM 9-2350-366-10-2)
Power plant rear access panel removed (WP 0309 00)
Driver's power plant access panel removed (WP 0312 00)

REMOVAL

1. REMOVE OIL SUPPLY HOSE (1) FROM ELBOW (2) ON THERMOSTATIC SWITCH (3).

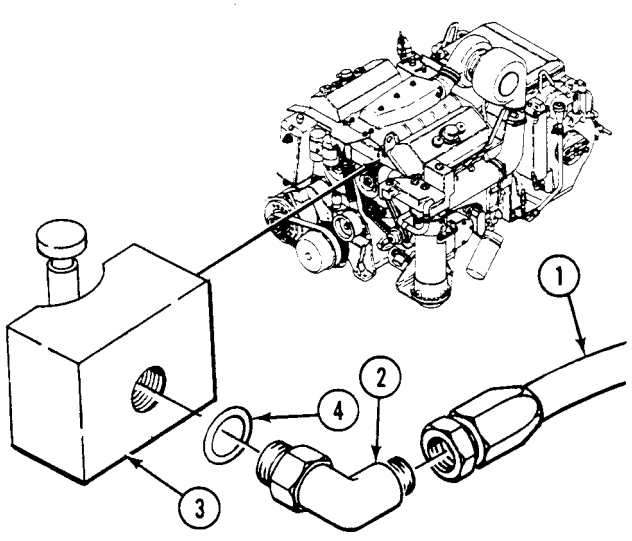

2. REMOVE ELBOW (2) AND PACKING (4) FROM SWITCH (3). DISCARD PACKING.

3. REMOVE TWO HOSES (5) AND (6) FROM ADAPTERS (7) AND (8).

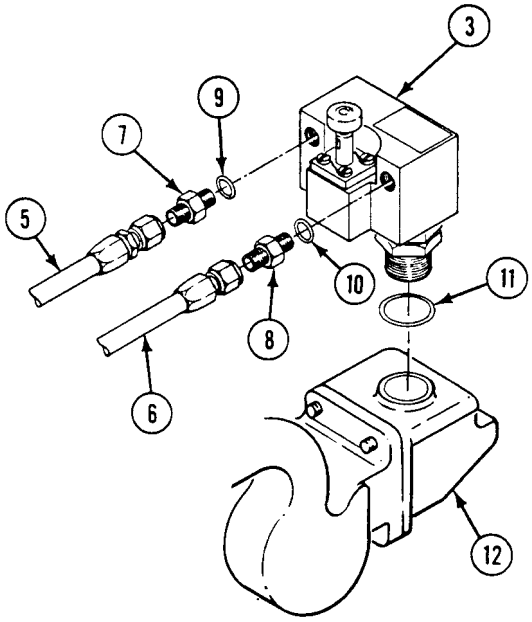

4. REMOVE ADAPTERS (7) AND (8) AND TWO PACKINGS (9) AND (10) FROM SWITCH (3). DISCARD PACKINGS.
5. REMOVE SWITCH (3) AND PACKING (11) FROM POWER PLANT (12). DISCARD PACKING.

INSTALLATION

1. APPLY THIN COATING OF SEALING COMPOUND TO THREADS OF SWITCH (3).

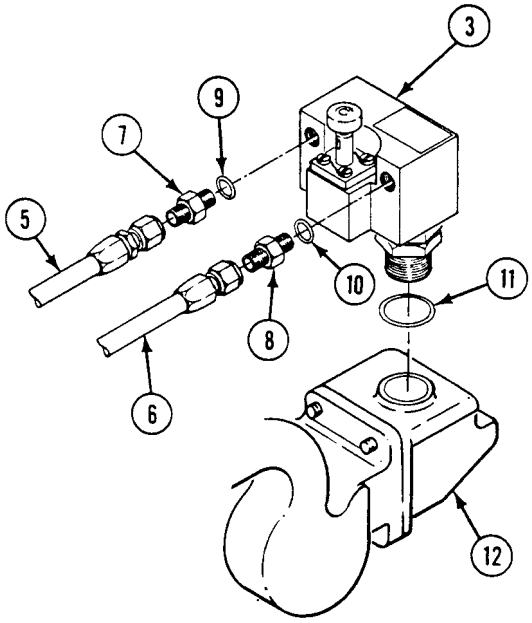

2. INSTALL SWITCH (3) AND NEW PACKING (11) ON POWER PLANT (12).

3. INSTALL ADAPTERS (7) AND (8) AND TWO NEW PACKINGS (9) AND (10) ON SWITCH (3).
4. INSTALL TWO HOSES (5) AND (6) ON ADAPTERS (7) AND (8).
5. INSTALL NEW PACKING (1) AND ELBOW (2) ON SWITCH (3).

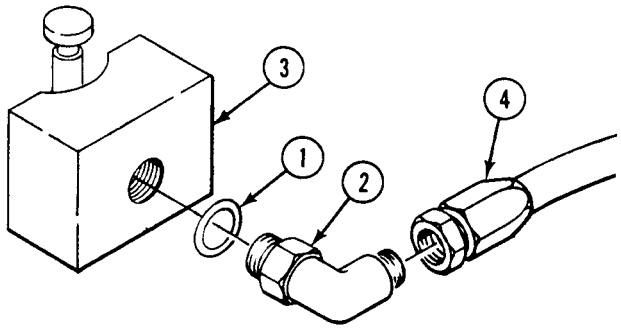

6. INSTALL OIL SUPPLY HOSE (4) ON ELBOW (2).
7. INSTALL POWER PLANT UPPER REAR ACCESS PANEL (WP 0309 00).
8. ROTATE TURRET TO 3200 MILS. See TM 9-2350-366-10-2.

END OF TASK

REPLACE UPPER COOLANT HOSE AND TUBE 0160 00

THIS WORK PACKAGE COVERS:

Removal (page 0160 00-1).
Installation (page 0160 00-3).

INITIAL SETUP:

Maintenance Level

Unit

Tools and Special Tools

General mechanic's tool kit (WP 0397 00, Item 64)

Materials/Parts

Sealing compound (WP 0399 00, Item 55)
Gasket
Key washer (2)

Personnel Required

Unit mechanic 63T10

References

TM 9-2350-366-10-1
TM 9-2350-366-10-2

Equipment Condition

Engine stopped (TM 9-2350-366-10-1)
Vehicle blocked (TM 9-2350-366-10-1)
Driver's power plant access panel removed (TM 9-2350-366-10-1)
Power plant upper rear access panel removed (TM 9-2350-366-10-1)
Turret rotated to 3200 mils (TM 9-2350-366-10-2)
Cooling system drained (WP 0155 00)

REMOVAL

1. LOOSEN FOUR CLAMPS (9) ON TWO HOSES (6). REMOVE RADIATOR INLET TUBE (7), HOSES, AND CLAMPS.

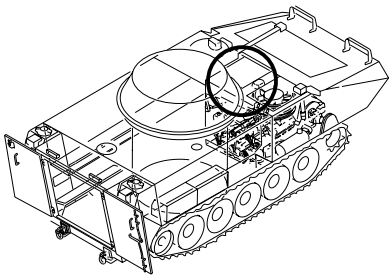

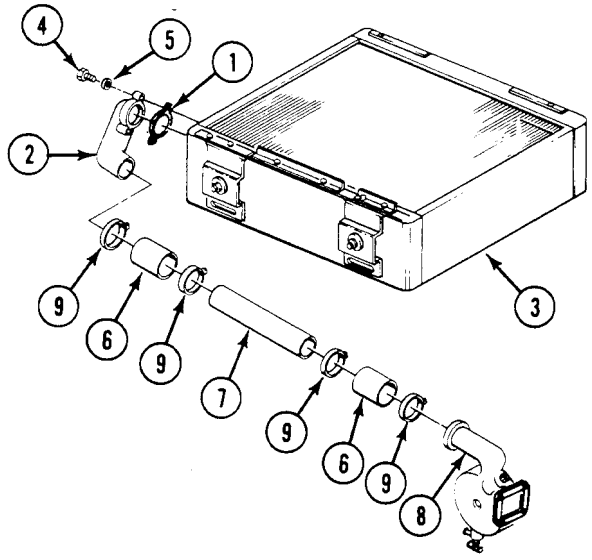

2. REMOVE TWO SCREWS (4), KEY WASHERS (5), RADIATOR INLET ELBOW (2), AND GASKET (1) FROM RADIATOR (3). DISCARD GASKET AND KEY WASHERS.

REPLACE UPPER COOLANT HOSE AND TUBE — Continued **0160 00**

3. LOOSEN TWO CLAMPS (1) AND (2) ON AUXILIARY TANK OUTLET HOSE (3). REMOVE HOSE AND CLAMPS FROM AUXILIARY TANK (4) AND RADIATOR OUTLET TUBE (5).

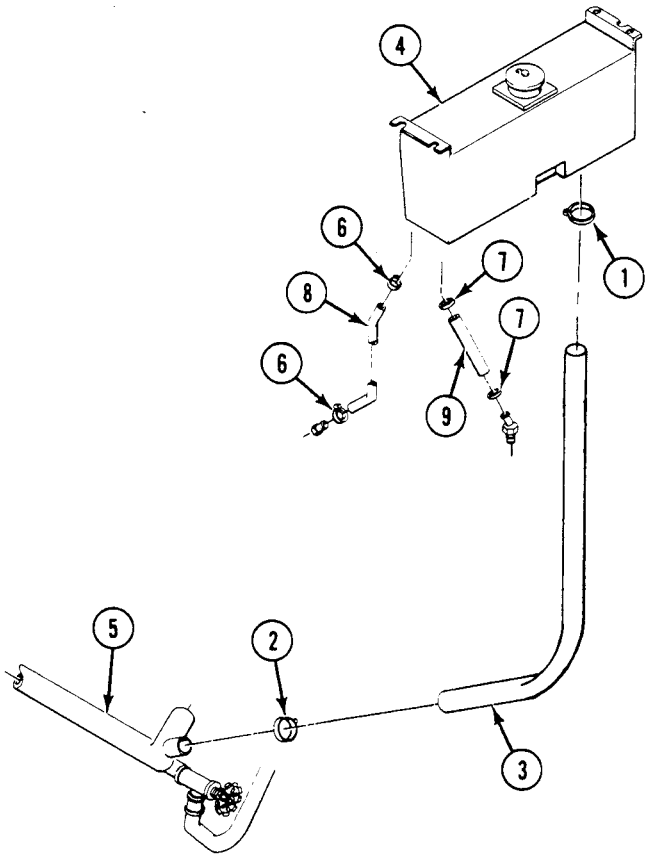

4. LOOSEN FOUR CLAMPS (13) AND (16) ON TWO VENT HOSES (10) AND (14). REMOVE HOSES AND CLAMPS.

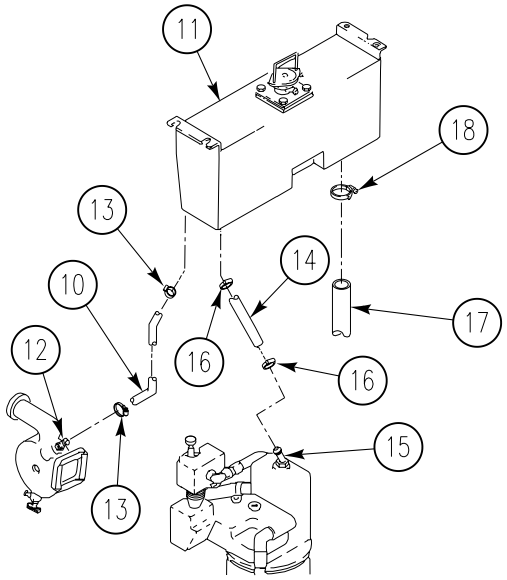

INSTALLATION

1. INSTALL VENT HOSE (10) ON AUXILIARY TANK (11) AND AIR SEPARATOR ADAPTER (12). SECURE WITH TWO CLAMPS (13).

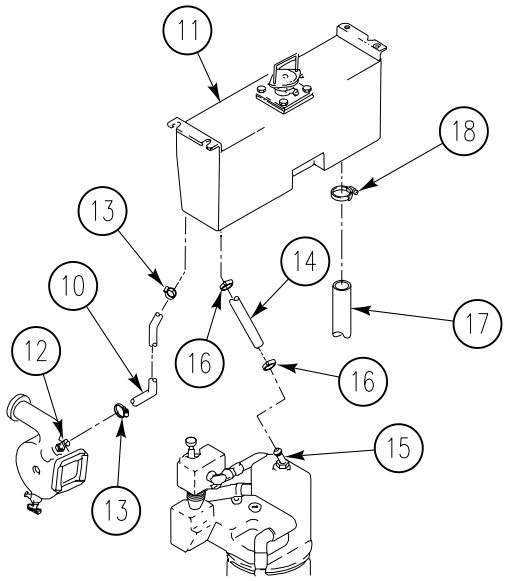

2. INSTALL VENT HOSE (14) ON AUXILIARY TANK (11) AND THERMOSTAT HOUSING ADAPTER (15). SECURE WITH TWO CLAMPS (16).
3. INSTALL HOSE (17) ON AUXILIARY TANK (11). SECURE WITH CLAMP (18).
4. INSTALL HOSE (19) ON RADIATOR OUTLET TUBE (20). SECURE WITH CLAMP (21).

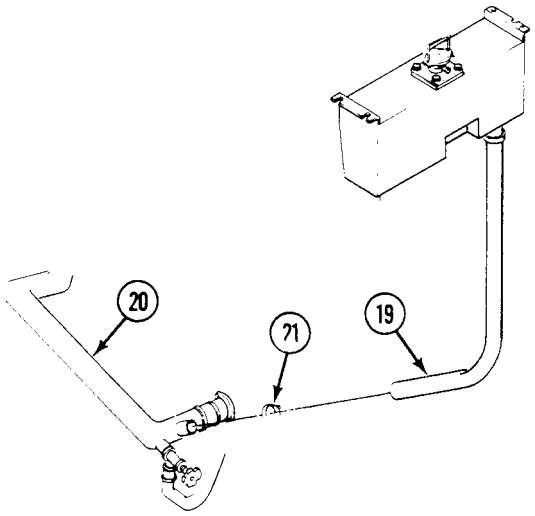

5. APPLY A THIN COAT OF SEALING COMPOUND TO BOTH SIDES OF NEW GASKET (1) AND TUBE ELBOW (2).
6. INSTALL NEW GASKET (1) ON RADIATOR INLET ELBOW (2). SECURE ELBOW TO RADIATOR (3) WITH TWO SCREWS (4) AND NEW KEY WASHERS (5).

REPLACE UPPER COOLANT HOSE AND TUBE — Continued **0160 00**

7. INSTALL TWO HOSES (6) ON RADIATOR INLET TUBE (7). SECURE HOSES TO TUBE, RADIATOR INLET ELBOW (2), AND AIR SEPARATOR (8) WITH FOUR CLAMPS (9).

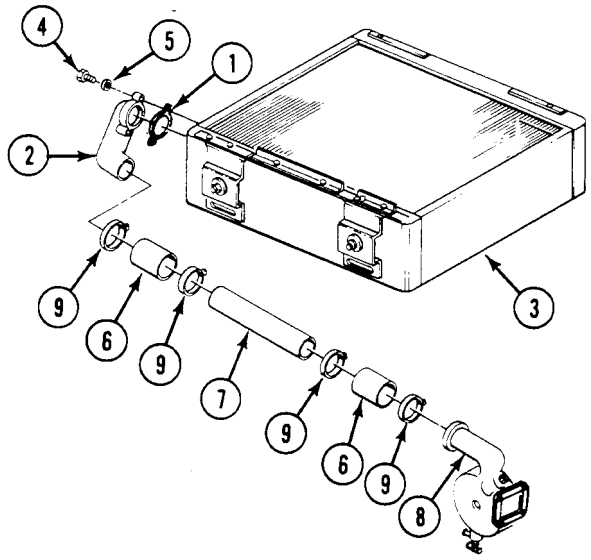

8. FILL COOLING SYSTEM (WP 0155 00).
9. INSTALL POWER PLANT UPPER REAR ACCESS PANEL. See (TM 9-2350-366-10-1).
10. INSTALL DRIVER'S POWER PLANT ACCESS PANEL. See (TM 9-2350-366-10-1).
11. ROTATE TURRET TO 6400 MILS. See (TM 9-2350-366-10-2)

END OF TASK

REPLACE RADIATOR OUTLET TUBE AND HOSE 0161 00

THIS WORK PACKAGE COVERS:

Removal (page 0161 00-1).
Installation (page 0161 00-4).

INITIAL SETUP:

Maintenance Level

Unit

Tools and Special Tools

General Mechanic's Tool Kit (WP 0397 00, Item 64)

Materials/Parts

Sealing compound (WP 0399 00, Item 55)
Gasket
Gasket
Key washer (2)
Lockwasher (2)

Personnel Required

Unit mechanic 63T10

References

TM 9-2350-366-10-1
TM 9-2350-366-10-2

Equipment Condition

Engine stopped (TM 9-2350-366-10-1)
Vehicle blocked (TM 9-2350-366-10-1)
Master switch OFF (TM 9-2350-366-10-1)
Turret rotated to 3200 mils (TM 9-2350-366-10-2)
Driver's power plant access panel removed (WP 0312 00)
Power plant rear access panels removed (WP 0309 00)
Power plant removed (WP 0335 00)

REMOVAL

1. LOOSEN CLAMP (1) SECURING DRAIN HOSE (2) TO DRAIN COCK (3). REMOVE HOSE AND CLAMP.

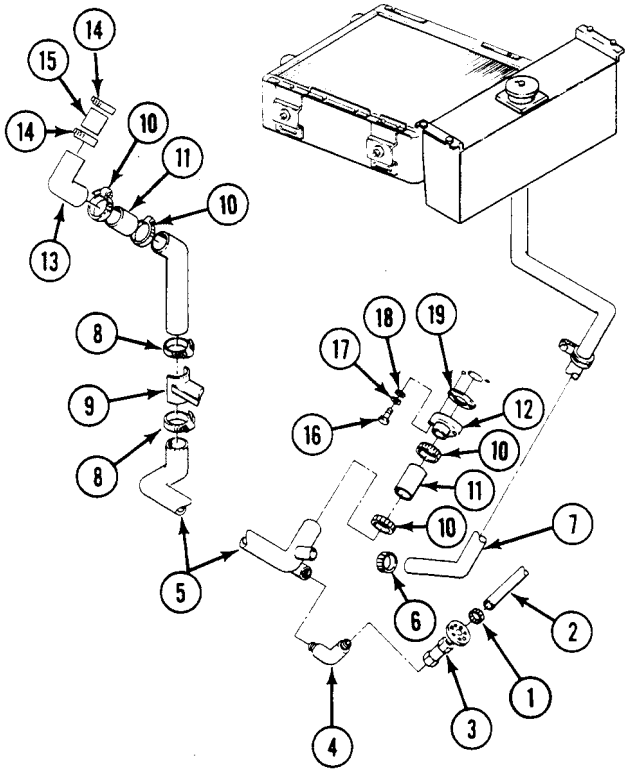

2. REMOVE DRAIN COCK (3) FROM ELBOW (4). REMOVE ELBOW (4) FROM RADIATOR OUTLET TUBE (5).

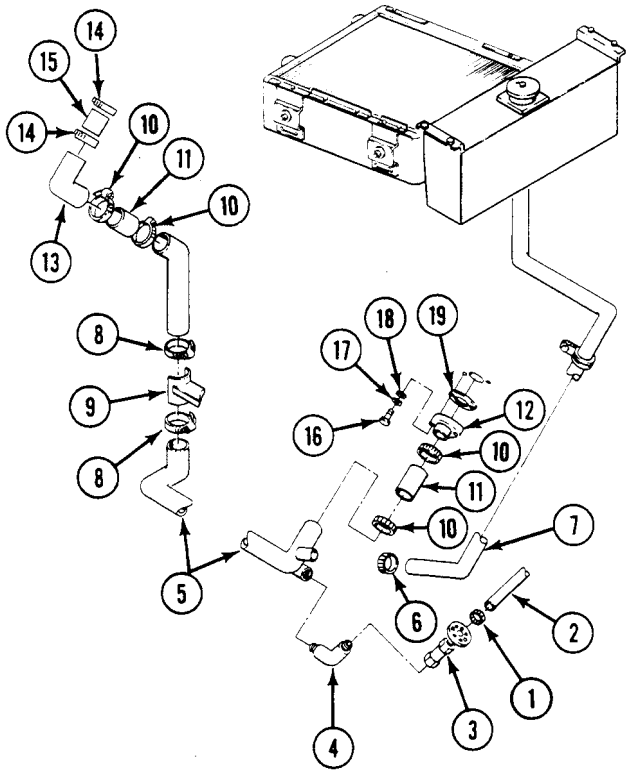

3. LOOSEN CLAMP (6) SECURING AUXILIARY TANK OUTLET HOSE (7) TO RADIATOR OUTLET TUBE (5). REMOVE CLAMP AND HOSE.
4. REMOVE TWO CLAMPS (8) SECURING RADIATOR OUTLET TUBE (5) TO TUBE SUPPORT BRACKET (9).
5. LOOSEN FOUR CLAMPS (10) SECURING TWO HOSES (11) AND RADIATOR OUTLET TUBE (5) TO ADAPTER (12) AND TUBE (13). REMOVE CLAMPS, HOSES, AND TUBE.

6. LOOSEN TWO CLAMPS (14) SECURING TUBE (13) AND HOSE (15) TO RADIATOR OUTLET ELBOW. REMOVE CLAMPS, HOSE, AND TUBE.

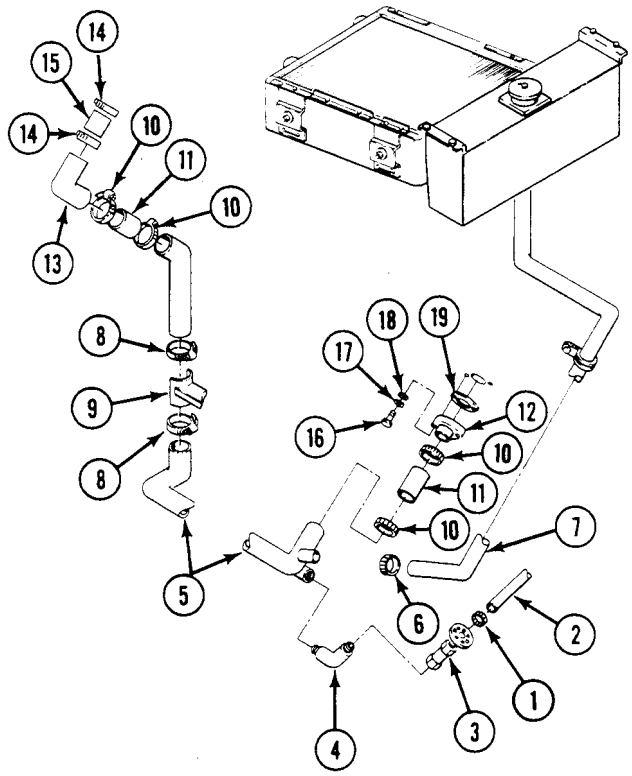

7. REMOVE TWO SCREWS (16), LOCKWASHERS (17), WASHERS (18), ADAPTER (12), AND GASKET (19) FROM ENGINE. DISCARD GASKET AND LOCKWASHERS.

8. REMOVE TWO SCREWS (1), KEY WASHERS (2), RADIATOR OUTLET ELBOW (3), AND GASKET (4) FROM RADIATOR (5). DISCARD GASKET AND KEY WASHERS.

REPLACE RADIATOR OUTLET TUBE AND HOSE — Continued 0161 00

INSTALLATION

1. APPLY SEALING COMPOUND TO MOUNTING SURFACES OF NEW GASKET (4).

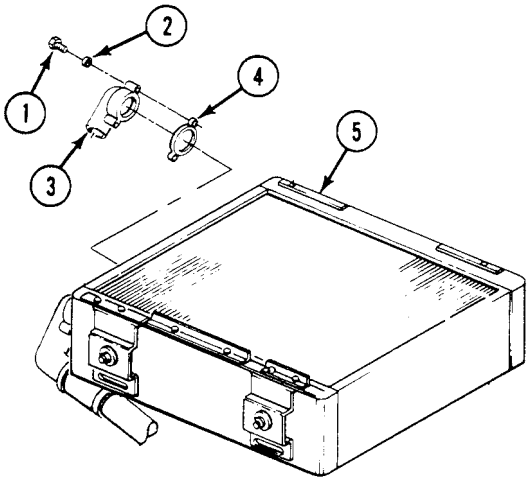

2. INSTALL RADIATOR OUTLET ELBOW (3) WITH NEW GASKET (4) ON RADIATOR (5). SECURE WITH TWO SCREWS (1) AND NEW KEY WASHERS (2).
3. APPLY SEALING COMPOUND TO MOUNTING SURFACES OF NEW GASKET (6).

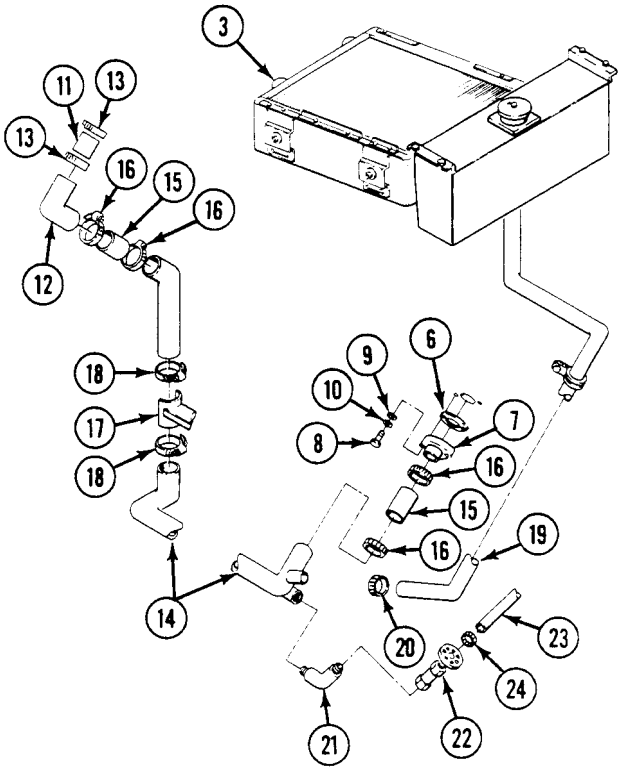

4. INSTALL ADAPTER (7) WITH NEW GASKET (6) ON ENGINE. SECURE WITH TWO SCREWS (8), WASHERS (9), AND NEW LOCKWASHERS (10).
5. INSTALL HOSE (11) AND TUBE (12) ON RADIATOR OUTLET ELBOW (3). SECURE WITH TWO CLAMPS (13).

6. INSTALL RADIATOR OUTLET TUBE (14) AND TWO HOSES (15) ON TUBE (12) AND ADAPTER (7). SECURE WITH FOUR CLAMPS (16).
7. SECURE RADIATOR OUTLET TUBE (14) TO SUPPORT BRACKET (17) WITH TWO CLAMPS (18).

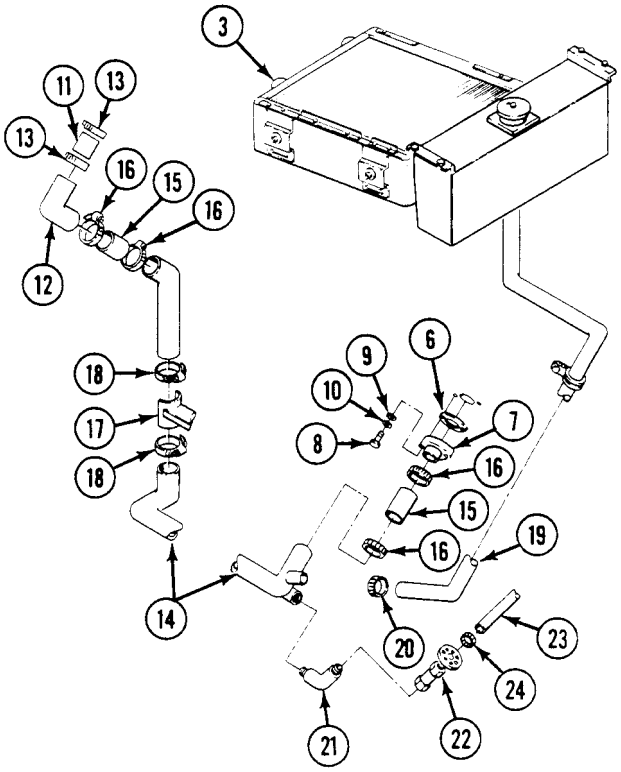

8. INSTALL AUXILIARY TANK OUTLET HOSE (19) ON RADIATOR OUTLET TUBE (14). SECURE WITH CLAMP (20).
9. INSTALL ELBOW (21) ON RADIATOR OUTLET TUBE (14). INSTALL DRAIN COCK (22) ON ELBOW (21).
10. INSTALL DRAIN HOSE (23) ON DRAIN COCK (22). SECURE WITH CLAMP (24).
11. ROTATE TURRET TO 6400 MILS. See TM 9-2350-366-10-2.
12. INSTALL POWER PLANT (WP 0106 00).
13. INSTALL POWER PLANT REAR ACCESS PANELS (WP 0309 00).
14. INSTALL DRIVER'S POWER PLANT ACCESS PANEL (WP 0312 00).

END OF TASK

REPLACE BALANCE HOSE 0162 00

THIS WORK PACKAGE COVERS:

Removal (page 0162 00-1).
Installation (page 0162 00-2).

INITIAL SETUP:

Maintenance Level
Unit

Tools and Special Tools
General mechanic's tool kit (WP 0397 00, Item 64)

Personnel Required
Unit mechanic 63T10

References
TM 9-2350-366-10-1

Equipment Condition
Engine stopped (TM 9-2350-366-10-1)
Vehicle blocked (TM 9-2350-366-10-1)
Front power plant access doors removed (TM 9-2350-366-10-1)
Power plant grill removed (WP 0335 00)
Grill air intake elbow and hose removed (WP 0145 00)
Hull nose assembly removed (WP 0313 00)

REMOVAL

1. LOOSEN TWO CLAMPS (1) ON BALANCE HOSE (2). REMOVE HOSE AND CLAMPS.

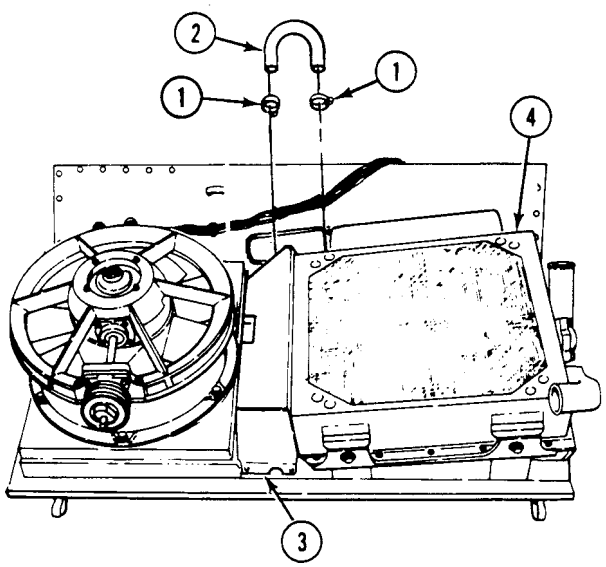

INSTALLATION

1. SLIDE TWO CLAMPS (1) ON BALANCE HOSE (2).

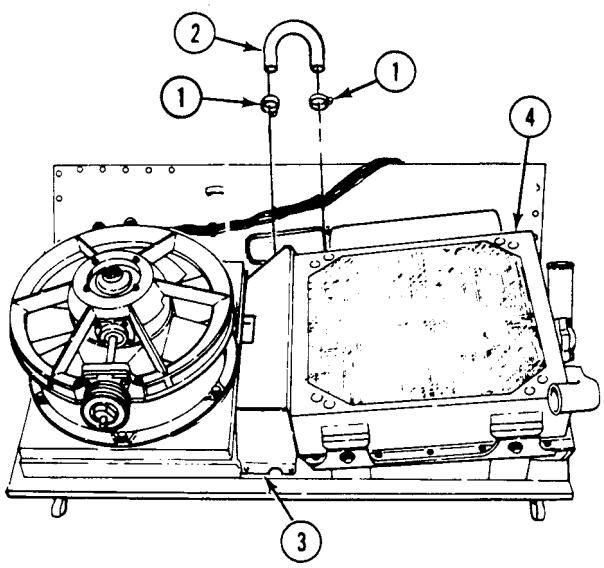

2. INSTALL BALANCE HOSE (2) ON AUXILIARY TANK (3) AND RADIATOR (4). TIGHTEN TWO CLAMPS (1).

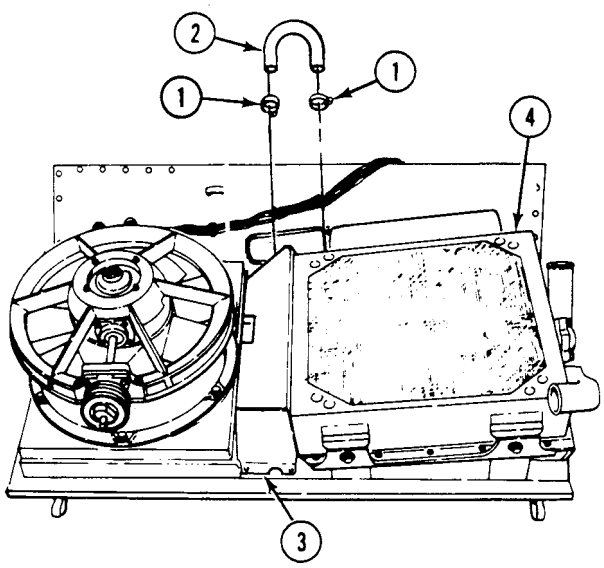

3. INSTALL GRILL AIR INTAKE ELBOW AND HOSE (WP 0142 00).

4. INSTALL POWER PLANT GRILL (WP 0335 00).

5. INSTALL FRONT POWER PLANT ACCESS DOORS. See TM 9-2350-366-10-1.

6. INSTALL HULL NOSE ASSEMBLY (WP 0313 00).

END OF TASK

REPLACE DRAIN COCK AND HOSE 0163 00

THIS WORK PACKAGE COVERS:

Removal (page 0163 00-1).
Installation (page 0163 00-2).

INITIAL SETUP:

Maintenance Level

Unit

Tools and Special Tools

General mechanic's tool kit (WP 0397 00, Item 64)

Materials/Parts

Sealing compound (WP 0399 00, Item 55)

Personnel Required

Unit Mechanic 63T10

References

TM 9-2350-366-10-1
TM 9-2350-366-10-2

Equipment Condition

Engine stopped (TM 9-2350-366-10-1)
Vehicle blocked (TM 9-2350-366-10-1)
Turret rotated to 3200 mils (TM 9-2350-366-10-2)
Power plant rear access panel removed (WP 0309 00)
Driver's power plant access panel removed (WP 0312 00)
Power plant bottom access cover removed (WP 0316 00)
Cooling system drained (WP 0155 00)

REMOVAL

1. LOOSEN CLAMP (1) ON DRAIN HOSE (2). REMOVE HOSE (2) FROM DRAIN COCK (3).

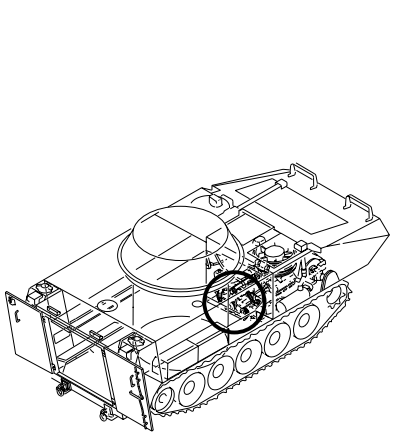

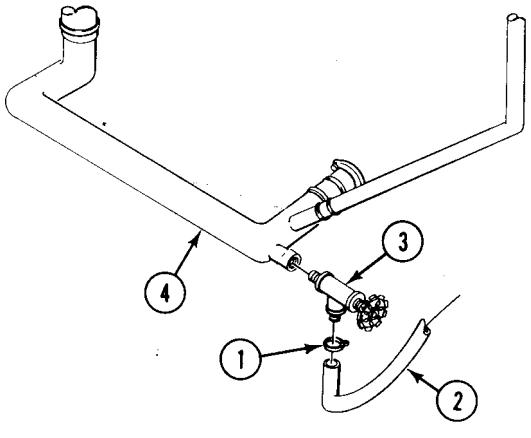

2. REMOVE COCK (3) FROM RADIATOR OUTLET TUBE (4).

INSTALLATION

1. APPLY LIGHT COAT OF SEALING COMPOUND TO EXTERNAL TAPERED THREADS OF COCK (3).

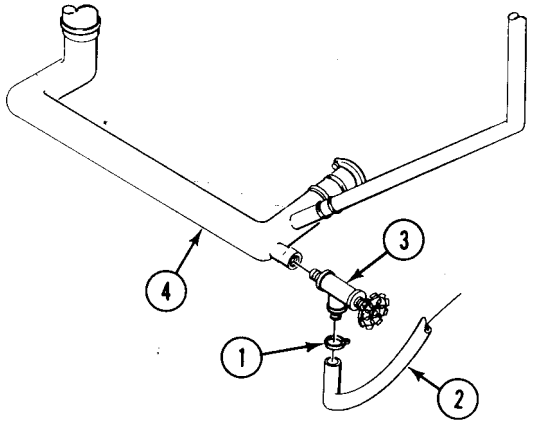

2. INSTALL COCK (3) ON RADIATOR OUTLET TUBE (4).
3. INSTALL HOSE (2) ON COCK (3). SECURE WITH CLAMP (1).
4. FILL COOLING SYSTEM (WP 0155 00).
5. INSTALL POWER PLANT BOTTOM ACCESS COVER (WP 0309 00).
6. INSTALL POWER PLANT LOWER REAR ACCESS PANEL (WP 0316 00).
7. ROTATE TURRET TO 6400 MILS. See TM 9-2350-366-10-2.

END OF TASK

REPLACE COOLANT AIR SEPARATOR 0164 00

THIS WORK PACKAGE COVERS:

Removal (page 0164 00-1).
Installation (page 0164 00-2).

INITIAL SETUP:

Maintenance Level

Unit

Tools and Special Tools

General mechanic's tool kit (WP 0397 00, Item 64)

Materials/Parts

Sealing compound (WP 0399 00, Item 55)
Gasket
Key washer (4)

Personnel Required

Unit mechanic 63T10

References

TM 9-2350-366-10-1
TM 9-2350-366-10-2

Equipment Condition

Engine stopped (TM 9-2350-366-10-1)
Carrier blocked (TM 9-2350-366-10-1)
Turret rotated to 3200 mils (TM 9-2350-366-10-2)
Power plant rear access panel removed (WP 0309 00)
Driver's power plant access panel removed (WP 0312 00)
Cooling system drained (WP 0155 00)

REMOVAL

1. LOOSEN TWO CLAMPS (1) ON HOSE (2). REMOVE HOSE FROM AIR SEPARATOR (3).

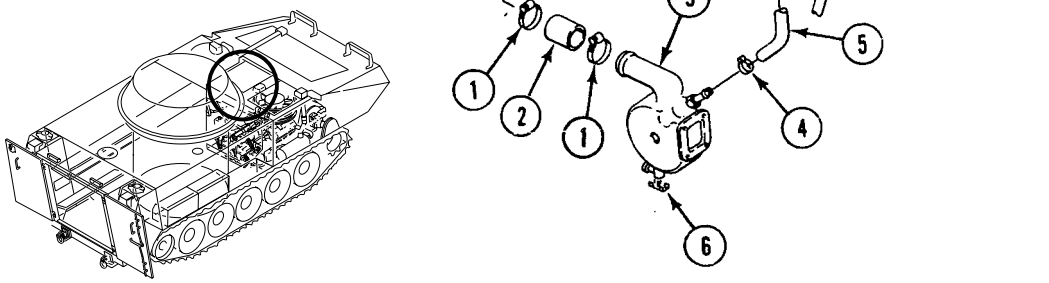

2. LOOSEN CLAMP (4) ON VENT HOSE (5). REMOVE HOSE FROM AIR SEPARATOR (3).
3. REMOVE DRAIN COCK (6) FROM AIR SEPARATOR (3).

4. REMOVE FOUR SCREWS (1), KEY WASHERS (2), AIR SEPARATOR (3), AND GASKET (4) FROM THERMOSTAT HOUSING (5). DISCARD GASKET AND KEY WASHERS.

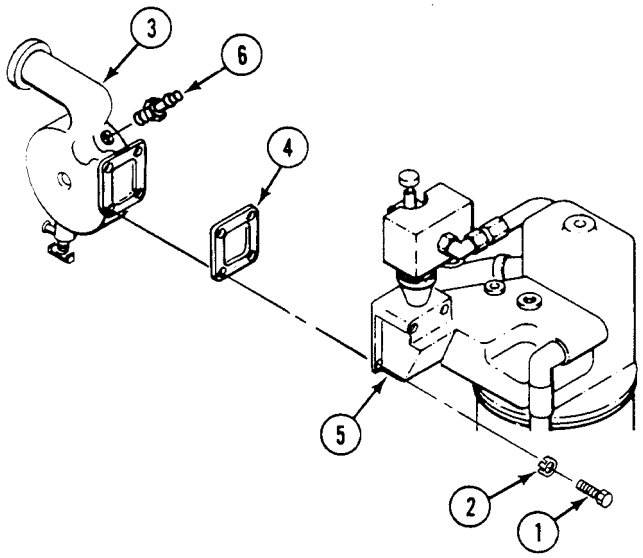

5. REMOVE ADAPTER (6) FROM AIR SEPARATOR (3).

INSTALLATION

1. INSTALL ADAPTER (6) ON AIR SEPARATOR (3).

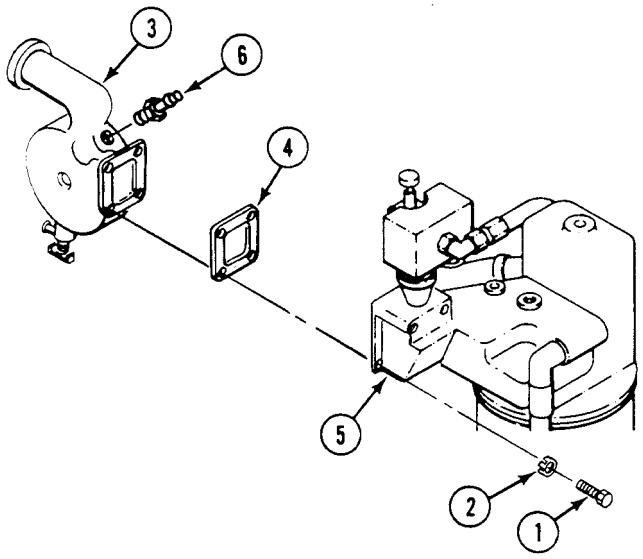

2. INSTALL AIR SEPARATOR (3) AND NEW GASKET (4) ON THERMOSTAT HOUSING (5). SECURE WITH FOUR SCREWS (1) AND NEW KEY WASHERS (2).

3. INSTALL DRAIN COCK (7) ON AIR SEPARATOR (3).

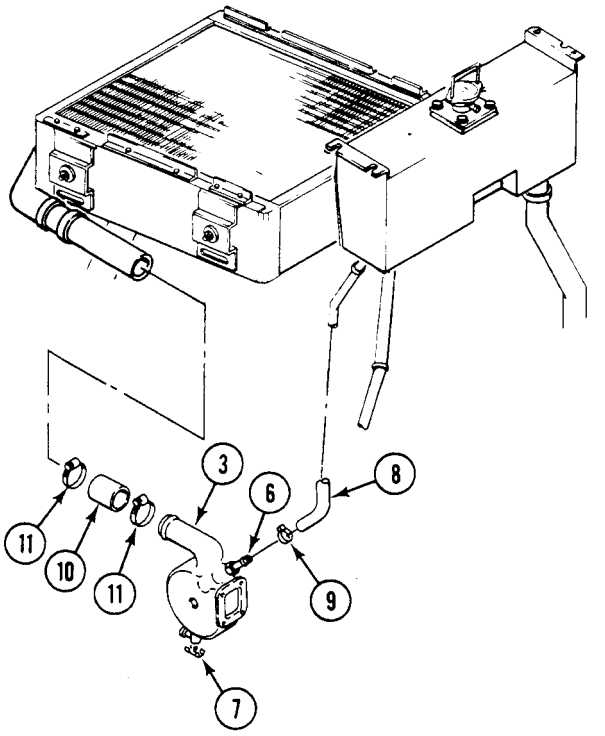

4. INSTALL VENT HOSE (8) ON ADAPTER (6). TIGHTEN CLAMP (9).
5. INSTALL HOSE (10) ON AIR SEPARATOR (3). TIGHTEN TWO CLAMPS (11).
6. FILL COOLING SYSTEM (WP 0155 00).
7. INSTALL POWER PLANT REAR UPPER ACCESS PANEL (WP 0309 00).
8. ROTATE TURRET TO 6400 MILS. See TM 9-2350-366-10-2

END OF TASK

REPLACE THERMOSTAT/COVER 0165 00

THIS WORK PACKAGE COVERS:

Removal (page 0165 00-1).
Installation (page 0165 00-3).

INITIAL SETUP:

Maintenance Level

Unit

Tools and Special Tools

General mechanic's tool kit (WP 0397 00, Item 64)

Materials/Parts

Adhesive (WP 0399 00, Item 4)
Gasket
Lock washer (4)

Personnel Required

Unit mechanic 63T10

References

TM 9-2350-366-10-1
TM 9-2350-366-10-2

Equipment Condition

Engine stopped (TM 9-2350-366-10-1)
Vehicle blocked (TM 9-2350-366-10-1)
Turret rotated to 3200 mils (TM 9-2350-366-10-2)
Cooling system drained (WP 0328 00)
Power plant rear access panel removed (WP 0309 00).
Driver's power plant access panel removed (WP 0312 00)
Coolant air separator removed (WP 0164 00)

REMOVAL

1. REMOVE OIL SUPPLY HOSE (1) FROM ELBOW (2) ON THERMOSTAT SWITCH (3).

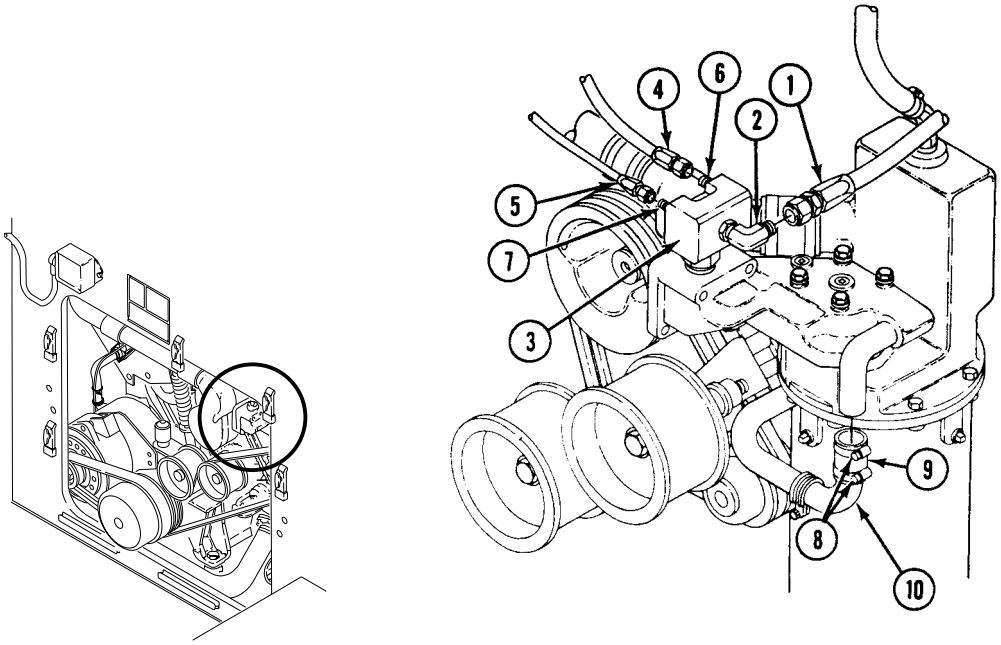

2. REMOVE TWO HOSES (4) AND (5) FROM ADAPTERS (6) AND (7).

REPLACE THERMOSTAT/COVER — Continued **0165 00**

3. LOOSEN TWO CLAMPS (8) AND SLIDE HOSE (9) DOWN ON BYPASS TUBE (10).
4. REMOVE FOUR SCREWS (1), LOCK WASHERS (2), WASHERS (3), THERMOSTAT COVER (4), AND GASKET (5). FROM THERMOSTAT HOUSING (6). DISCARD LOCK WASHERS AND GASKET.

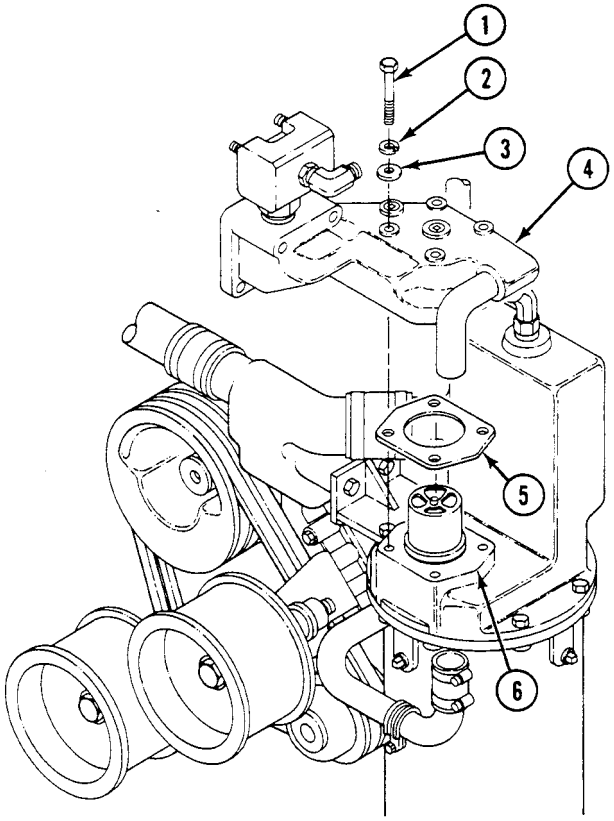

5. REMOVE THERMOSTAT (7) FROM THERMOSTAT HOUSING (6).

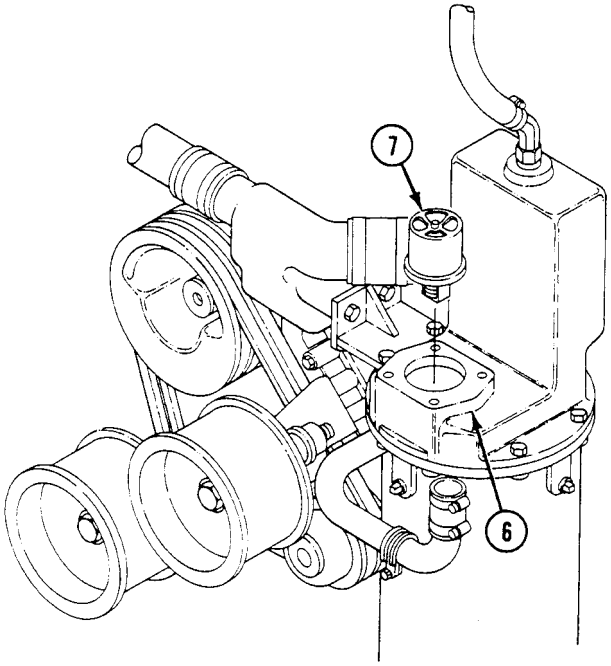

INSTALLATION

1. INSTALL THERMOSTAT (7) ON THERMOSTAT HOUSING (6).

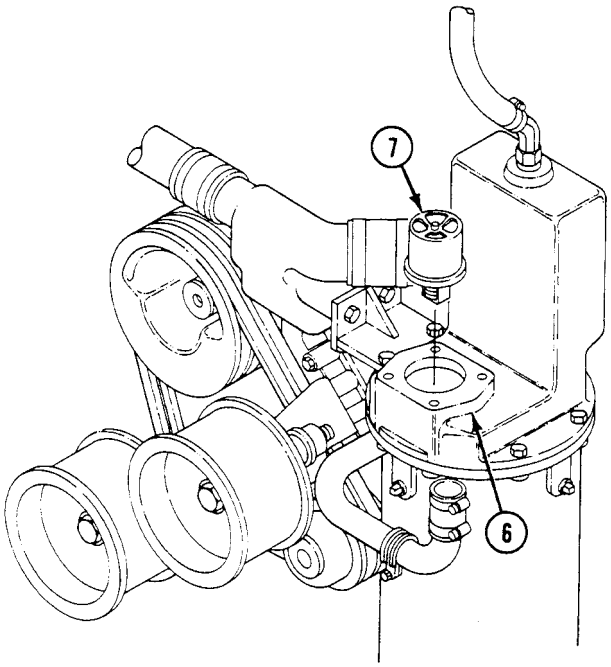

2. APPLY A THIN COAT OF ADHESIVE TO BOTH SIDES OF NEW GASKET (8).

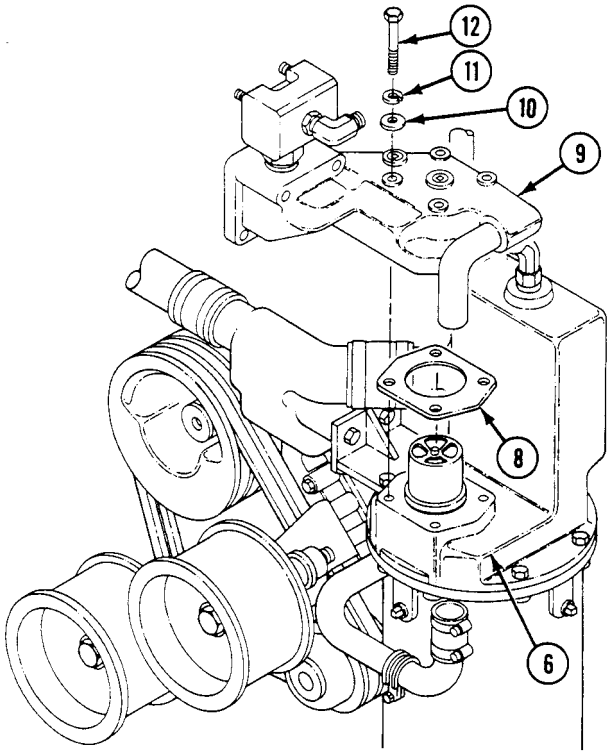

3. INSTALL GASKET (8), THERMOSTAT COVER (9), FOUR WASHERS (10), NEW LOCK WASHERS (11), AND SCREWS (12) ON THERMOSTAT HOUSING (6).

4. INSTALL HOSE (1) ON THERMOSTAT COVER (2) AND BYPASS TUBE (3). SECURE WITH TWO CLAMPS (4).

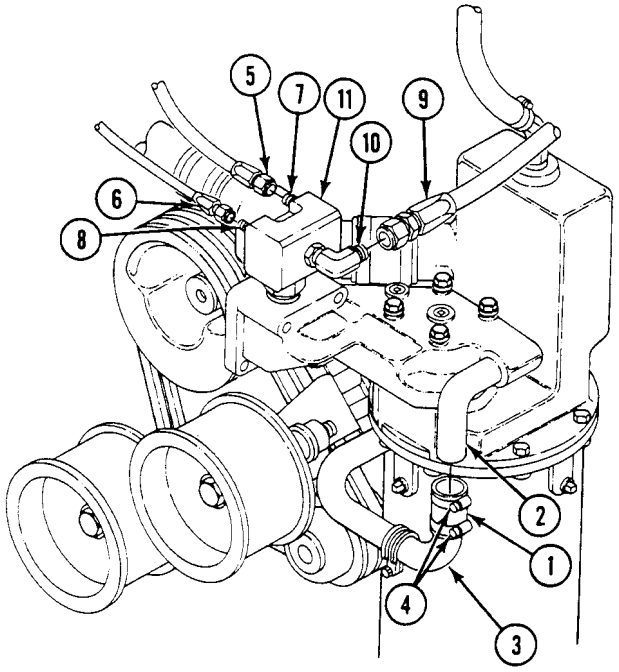

5. INSTALL TWO HOSES (5) AND (6) ON ADAPTERS (7) AND (8).
6. INSTALL OIL SUPPLY HOSE (9) ON ELBOW (10) ON THERMOSTAT SWITCH (11).
7. ROTATE TURRET TO 6400 MILS. See TM 9-2350-366-10-2.
8. INSTALL COOLANT AIR SEPARATOR (WP 0343 00).
9. FILL COOLING SYSTEM (WP 0328 00).
10. INSTALL POWER PLANT UPPER REAR ACCESS PANEL (WP 0309 00).

END OF TASK

REPLACE THERMOSTAT TUBE/HOSES 0166 00

THIS WORK PACKAGE COVERS:

Removal (page 0166 00-1).
Installation (page 0166 00-3).

INITIAL SETUP:

Maintenance Level

Unit

Tools and Special Tools

General mechanic's tool kit (WP 0397 00, Item 64)

Personnel Required

Unit mechanic 63T10

References

TM 9-2350-366-10-1
TM 9-2350-366-10-2

Equipment Condition

Engine stopped (TM 9-2350-366-10-1)
Vehicle blocked (TM 9-2350-366-10-1)
Turret rotated to 3200 mils (TM 9-2350-366-10-2)
Power plant rear access panels removed (WP 0309 00)
Driver's power plant access panels removed (WP 0312 00)

REMOVAL

1. LOOSEN TWO UPPER CLAMPS (1) AND SLIDE HOSE (2) DOWN ON BYPASS TUBE (3).

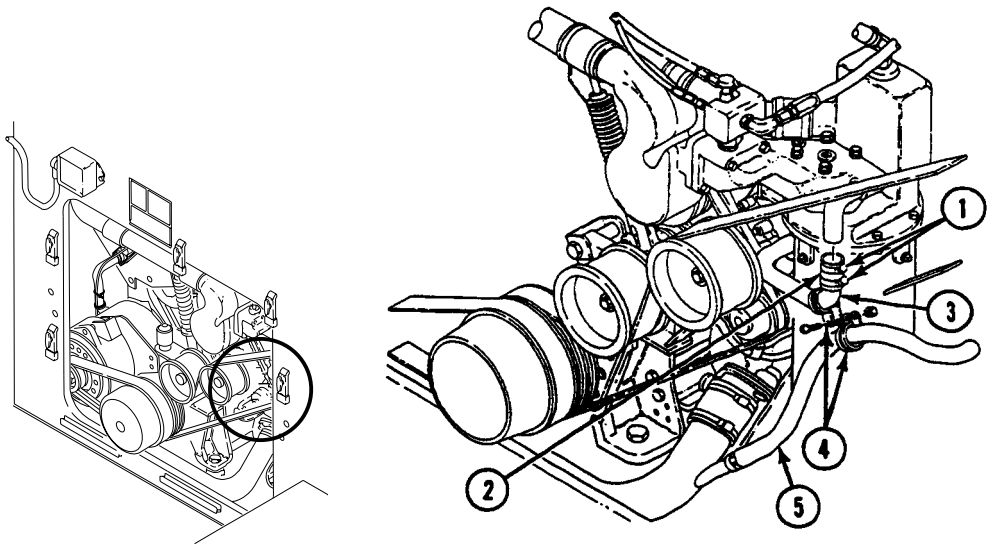

2. DISCONNECT TWO HOSE CLAMPS (4) THAT SUPPORT COOLANT HOSE (5).

REPLACE THERMOSTAT TUBE/HOSES — Continued **0166 00**

3. LOOSEN TWO LOWER HOSE CLAMPS (6) ON WATER PUMP HOUSING (7) AND SLIDE HOSE (8) UP ON TUBE (3).

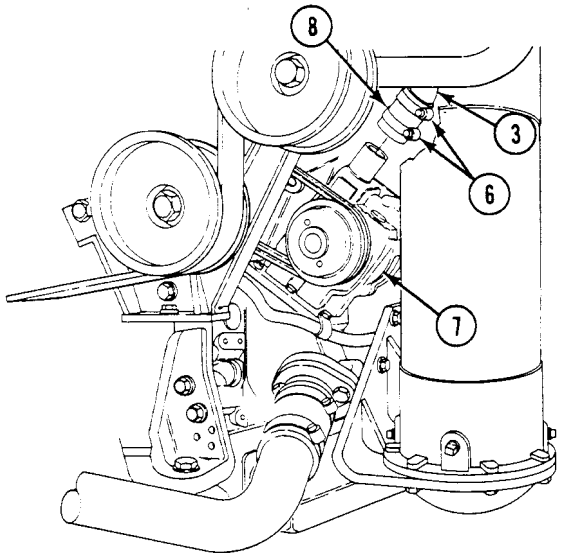

4. REMOVE TUBE (3), HOSES (2) AND (8) AND CLAMPS (1) AND (6) AS A UNIT.

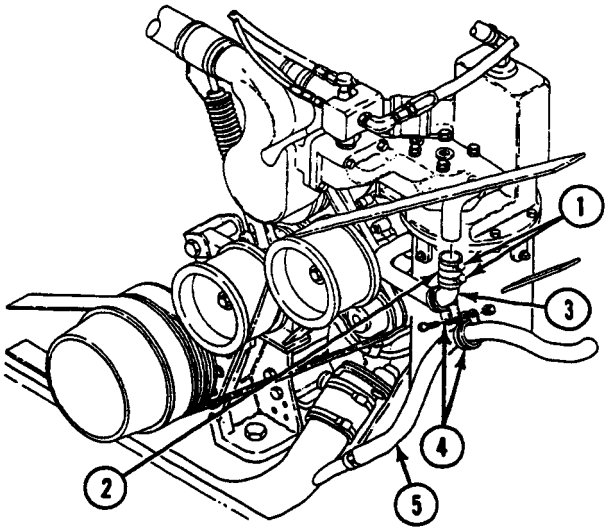

5. REMOVE FOUR CLAMPS (1) AND (6) AND TWO HOSES (2) AND (8) FROM TUBE (3).

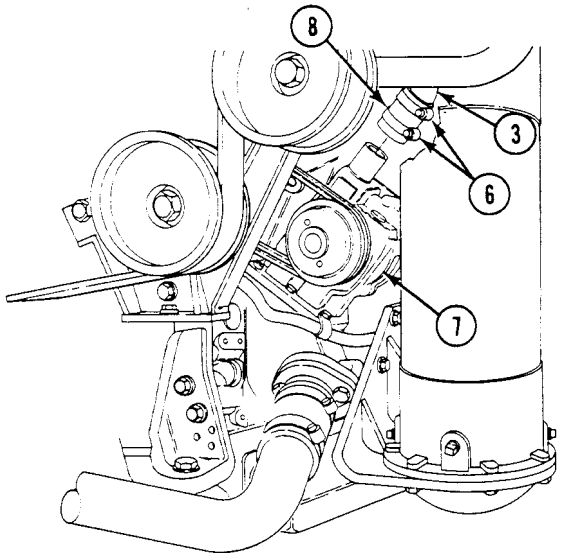

6. INSPECT TWO HOSES (2) AND (8) FOR CRACKS OR DETERIORATION. REPLACE IF NECESSARY.

INSTALLATION

1. INSTALL HOSE (1) AND TWO CLAMPS (2) ON LOWER END OF NEW TUBE (3).

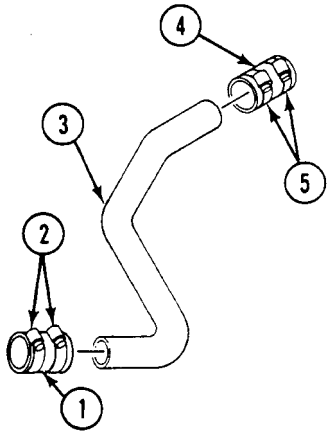

2. INSTALL HOSE (4) AND TWO CLAMPS (5) ON UPPER END OF TUBE (3).
3. PLACE TUBE (3) WITH TWO HOSES (1) AND (4) AND FOUR CLAMPS (2) AND (5) IN POSITION ON ENGINE. SLIDE UPPER HOSE (4) ONTO THERMOSTAT HOUSING (6) AND TIGHTEN WITH TWO CLAMPS (5).

4. CONNECT THE TWO HOSE CLAMPS (7) THAT SUPPORT THE COOLANT HOSE (8).

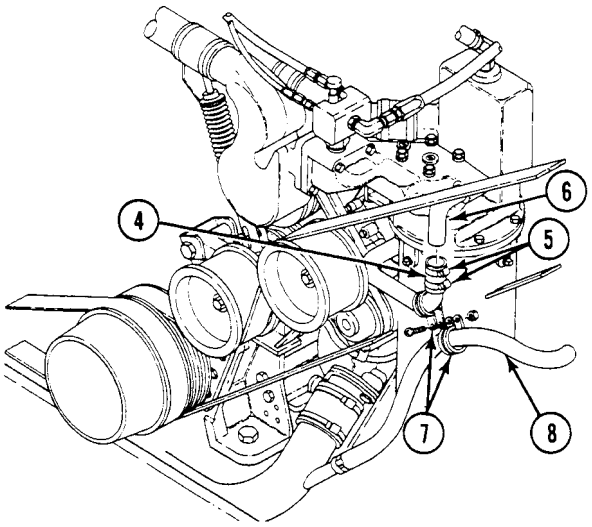

5. SLIDE LOWER HOSE (1) ONTO WATER PUMP HOUSING (9). POSITION TWO CLAMPS (2) AND TIGHTEN.

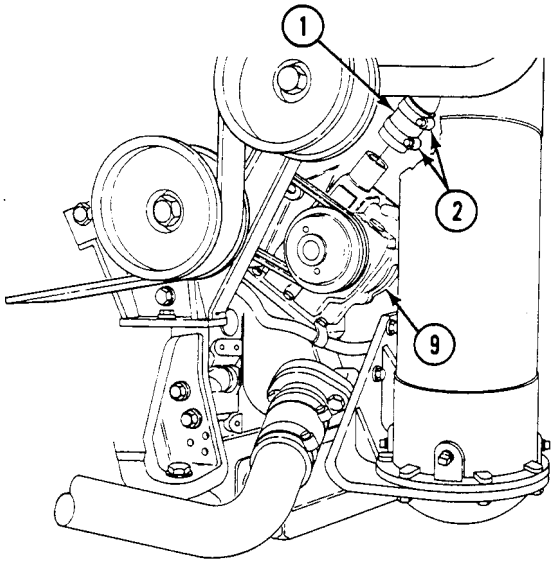

WARNING

Turret can rotate and severely injure or kill you. Do not reach through turret shield opening when turret power is on. Keep turret shield door closed whenever turret drive power is on. Engage turret travel lock before moving or reaching through turret shield opening.

CAUTION

During turret rotation, driver's hatch must be closed to prevent damage to turret/driver's hatch.

6. ROTATE TURRET TO 6400 MILS. See TM 9-2350-366-10-2.
7. INSTALL POWER PLANT UPPER AND LOWER REAR ACCESS PANELS AND SUPPORT (WP 0309 00).

END OF TASK

CHAPTER 10

UNIT MAINTENANCE INSTRUCTIONS FOR WATER PUMP

WORK PACKAGE INDEX

Title	Sequence No.
ADJUST COOLANT PUMP BELTS	0167 00
REPLACE COOLANT PUMP IDLER PULLEY/BELTS	0168 00
REPLACE ENGINE COOLANT PUMP	0169 00

ADJUST COOLANT PUMP BELTS 0167 00

THIS WORK PACKAGE COVERS:

Adjustment (page 0167 00-1).

INITIAL SETUP:

Maintenance Level

Unit

Tools and Special Tools

General mechanic's tool kit (WP 0397 00, Item 64)
Torque wrench (WP 0397 00, Item 79)
Socket set (WP 0397 00, Item 70)
Yardstick, aluminum (WP 0397 00, Item 85)

Materials/Parts

Cotter pin
Locknut
Locknut

Personnel Required

Unit Mechanic 63T10

References

TM 9-2350-366-10-1
TM 9-2350-366-10-2

Equipment Condition

Engine stopped (TM 9-2350-366-10-1)
Vehicle blocked (TM 9-2350-366-10-1)
Turret rotated to 3200 mils (TM 9-2350-366-10-2)
Power plant rear access panels removed (WP 0309 00).
Driver's power plant access panel removed (WP 0312 00)
Ventilating fan drive belt removed (WP 0148 00).

ADJUSTMENT

1. REMOVE COTTER PIN (1), PIN (2) AND SPRING TENSIONER (3) FROM BRACKET (4). DISCARD COTTER PIN.

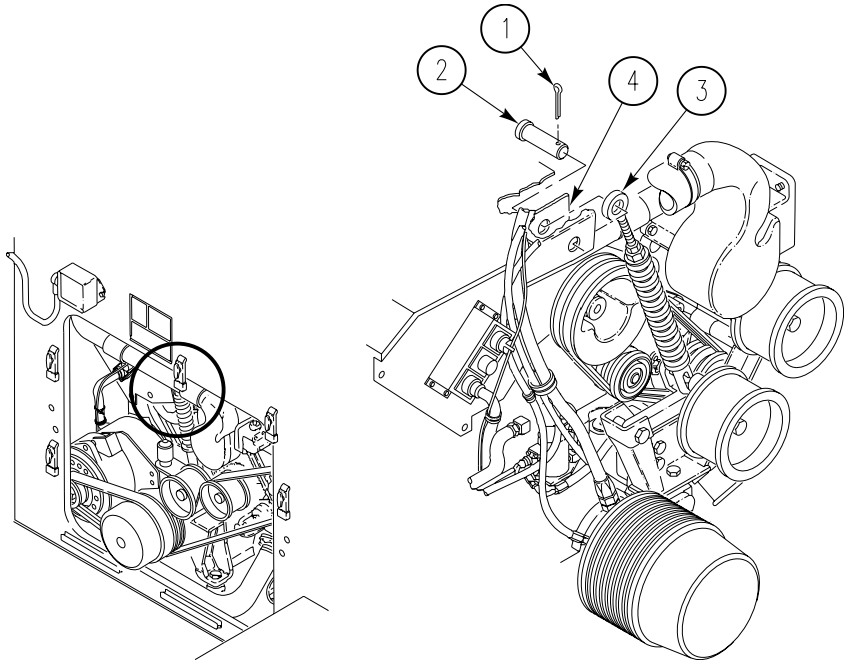

ADJUST COOLANT PUMP BELTS — Continued **0167 00**

2. REMOVE LOCKNUT (5), WASHERS (6)(3), SCREW (1), AND PULLEY (2) FROM BRACKET (4). DISCARD LOCKNUT.

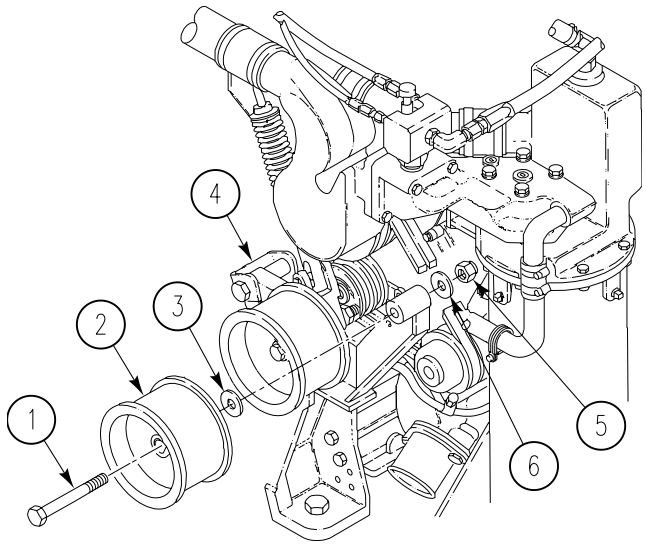

3. REMOVE SCREW (1), LOCK WASHER (2), WASHER (3), AND TWO SPACERS (5) FROM BRACKET (4). DISCARD LOCK WASHER.

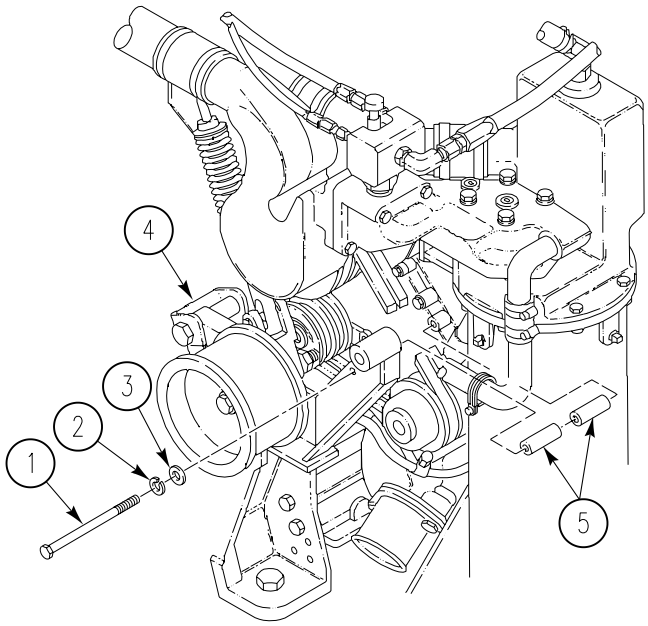

4. REMOVE TWO SCREWS (6), LOCK WASHERS (7), AND WASHERS (8) FROM BRACKET (5). DISCARD LOCK WASHERS.

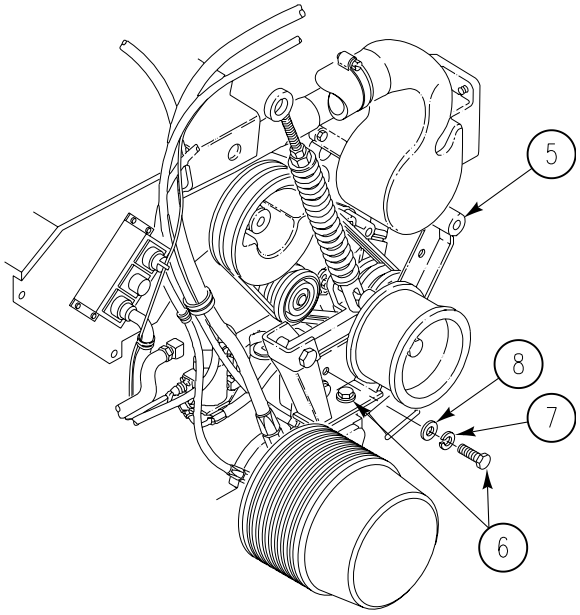

5. REMOVE SCREW (9), LOCK WASHER (10), WASHER (11) AND IDLER ARM BRACKET (5) FROM ENGINE. DISCARD LOCK WASHER.

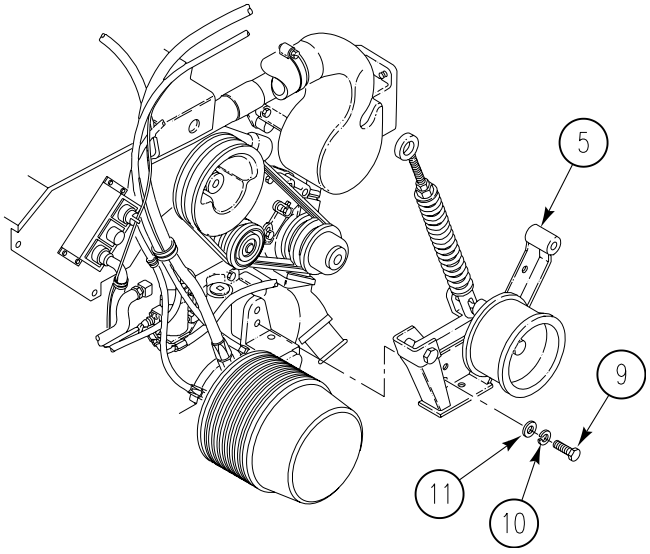

6. LOOSEN TWO SCREWS (12) SECURING IDLER ADJUSTING BRACKET (13) TO ENGINE.

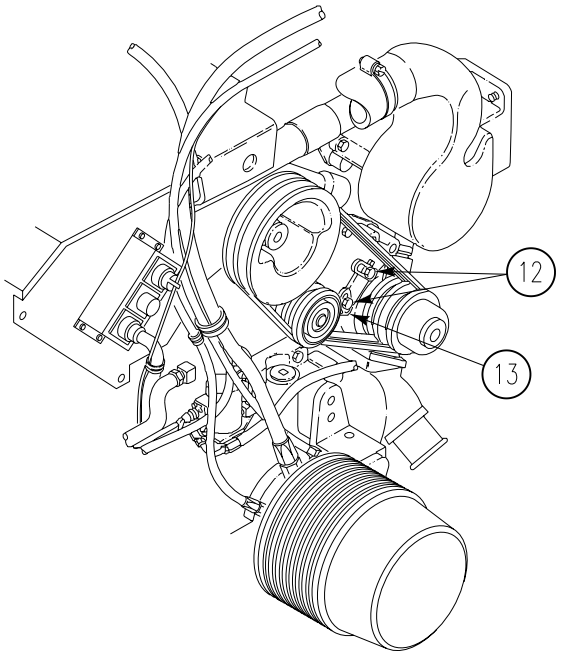

7. MOVE IDLER ADJUSTING BRACKET (1) TO OBTAIN A 3/8 INCH (10MM) DEFLECTION WHEN TWO DRIVE BELTS (2) ARE DEPRESSED MIDWAY BETWEEN PULLEYS (3) AND (4).

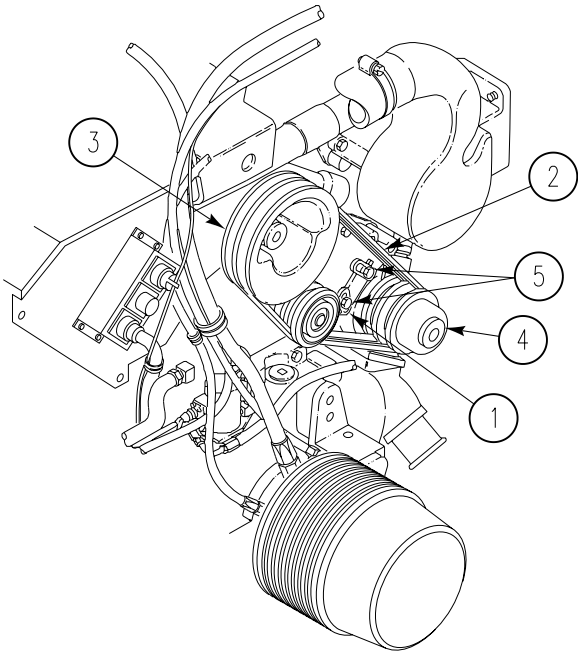

8. TIGHTEN TWO SCREWS (5) TO 30–35 LB-FT (41–47 N·m) TORQUE.

9. INSTALL IDLER ARM BRACKET (6) ON ENGINE. SECURE WITH SCREW (7), NEW LOCK WASHER (8), AND WASHER (9).

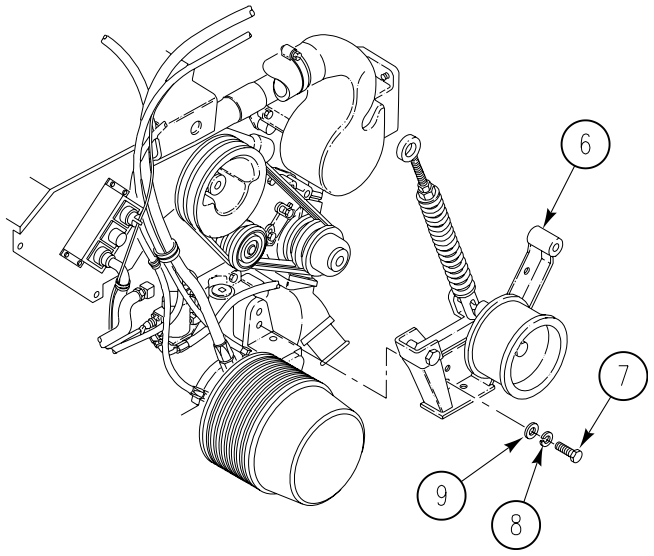

10. INSTALL TWO SCREWS (10), NEW LOCK WASHER (11), AND WASHERS (12) ON BRACKET (6).

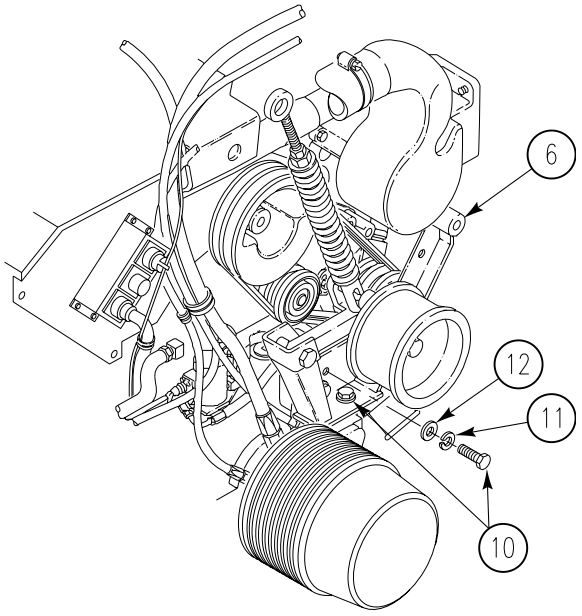

11. INSTALL, SCREW (1), NEW LOCK WASHER (2), WASHER (3) AND TWO SPACERS (5) ON BRACKET (4).

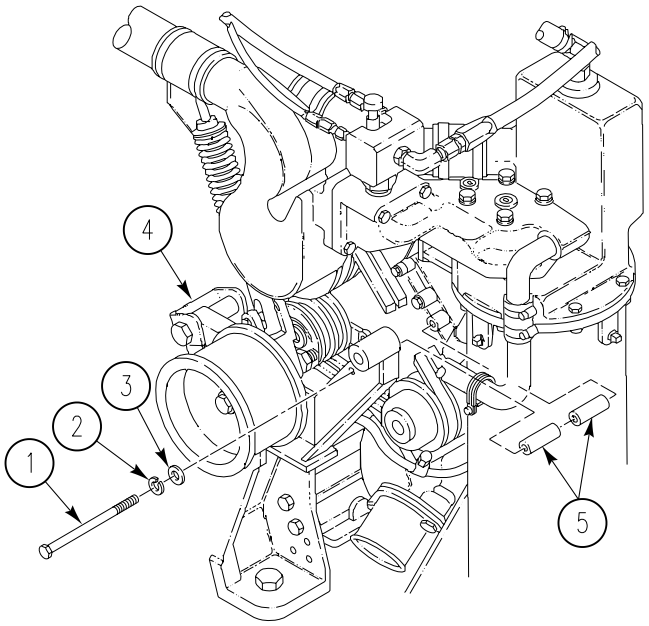

NOTE

Do Step 12 only if you need to use the straight edge for the belt adjustment check.

12. INSTALL PULLEY (2), SCREW (1), WASHER (3)(6) AND NEW LOCKNUT (5) ON BRACKET (4).

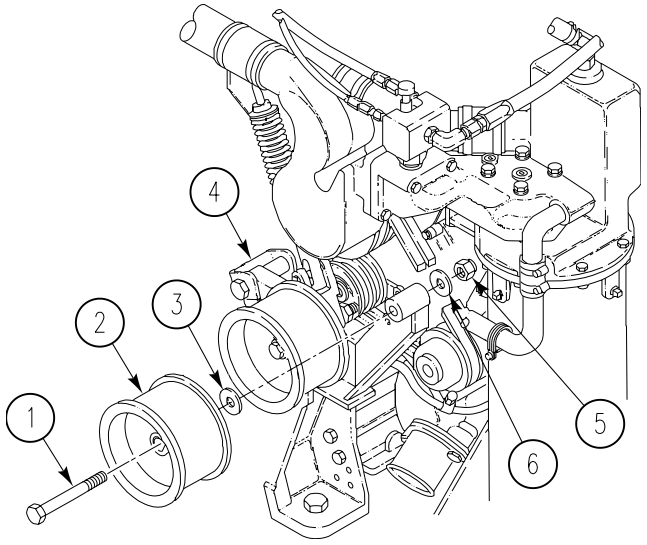

13. INSTALL PIN (1), SPRING TENSIONER (3), AND NEW COTTER PIN (2) ON BRACKET (4).

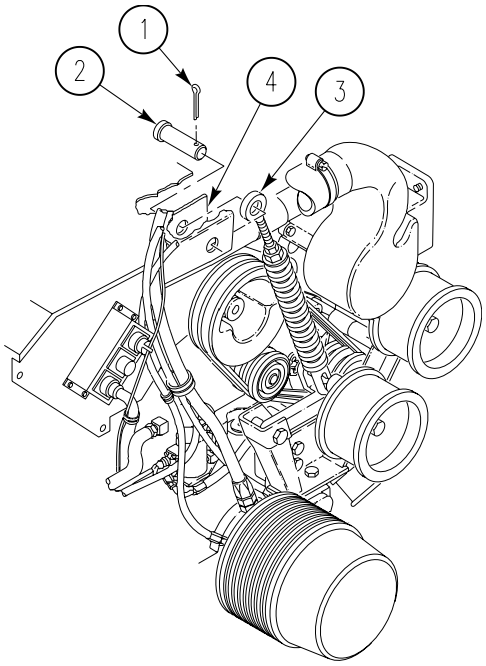

14. INSTALL VENTILATING FAN DRIVE BELT (WP 0148 00)
15. INSTALL POWER PLANT REAR ACCESS PANELS AND SUPPORT (WP 0309 00).
16. ROTATE TURRET TO 3200 MILS. See TM 9-2350-366-10-2.

END OF TASK

REPLACE COOLANT PUMP IDLER PULLEY/BELTS 0168 00

THIS WORK PACKAGE COVERS:

Removal (page 0168 00-1).
Installation (page 0168 00-5).

INITIAL SETUP:

Maintenance Level

Unit

Tools and Special Tools

General Mechanic's Tool Kit (WP 0397 00, Item 64)
Torque Wrench (WP 0397 00, Item 79)

Materials/Parts

Cotter pin
Locknut

Personnel Required

Unit Mechanic 63T10

References

TM 9-2350-366-10-1
TM 9-2350-366-10-2

Equipment Condition

Engine stopped (TM 9-2350-366-10-1)
Vehicle blocked (TM 9-2350-366-10-1)
Turret rotated to 3200 mils (TM 9-2350-366-10-2)
Power plant rear access panels removed (WP 0309 00).
Driver's power plant access panel removed (WP 0312 00)
Ventilating fan drive belt removed (WP 0148 00)

REMOVAL

1. REMOVE COTTER PIN (1), PIN (2) AND SPRING TENSIONER (3) FROM BRACKET (4). DISCARD COTTER PIN.

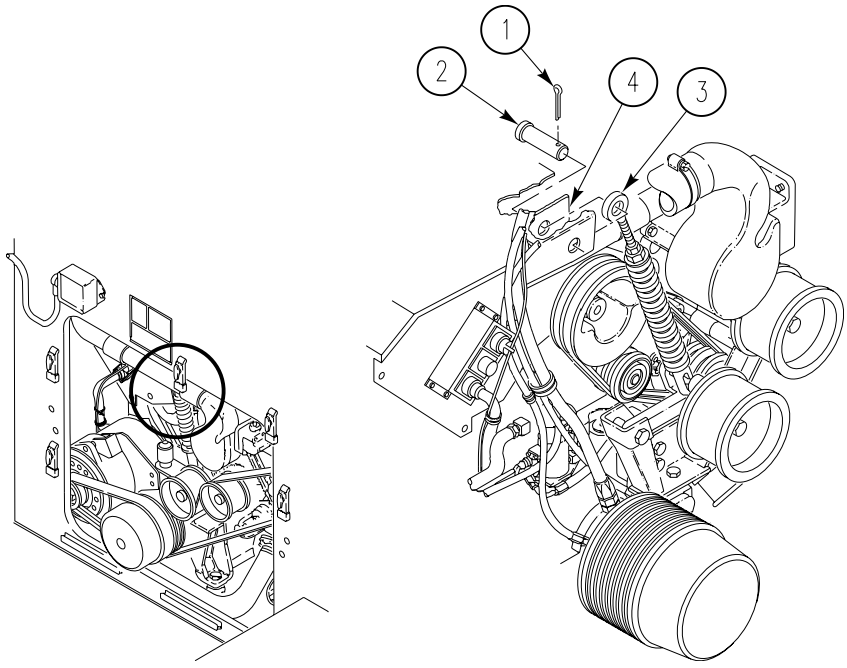

REPLACE COOLANT PUMP IDLER PULLEY/BELTS — Continued **0168 00**

2. REMOVE LOCKNUT (5), WASHER (6), SCREW (7), WASHER (3), AND PULLEY (2) FROM BRACKET (4). DISCARD LOCKNUT.

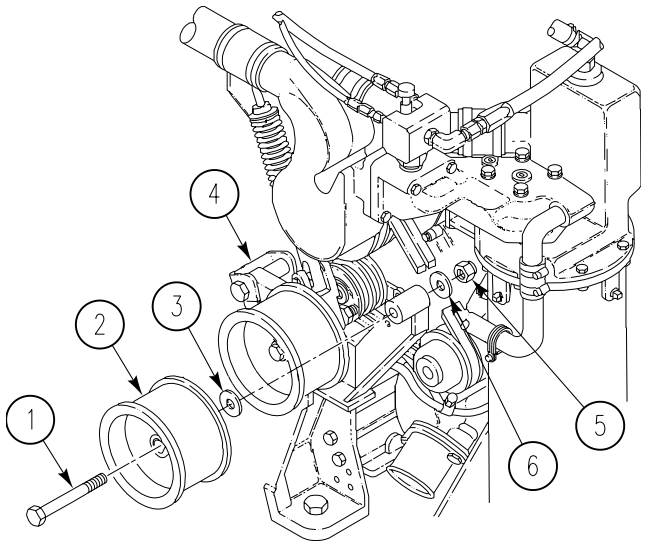

3. REMOVE SCREW (1), LOCKWASHER (2), WASHER (3), AND TWO SPACERS (5) FROM BRACKET (4). DISCARD LOCKWASHER.

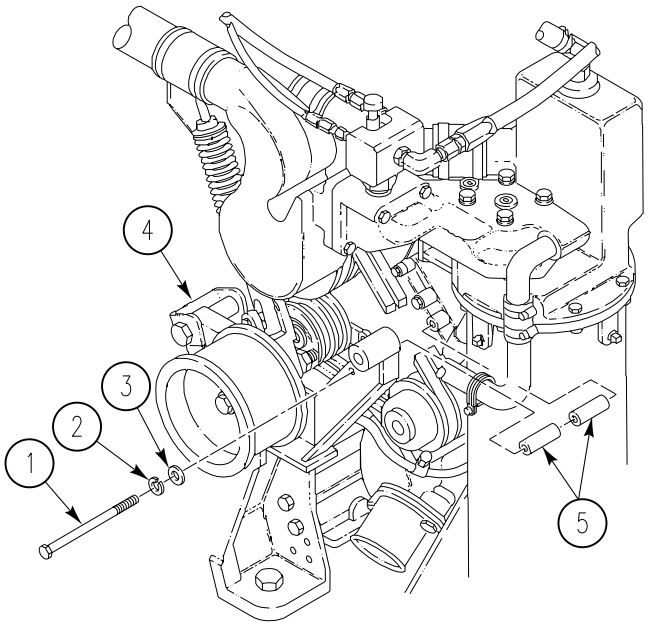

4. REMOVE TWO SCREWS (6), LOCKWASHERS (7), WASHERS (8) FROM BRACKET (5). DISCARD LOCKWASHERS.

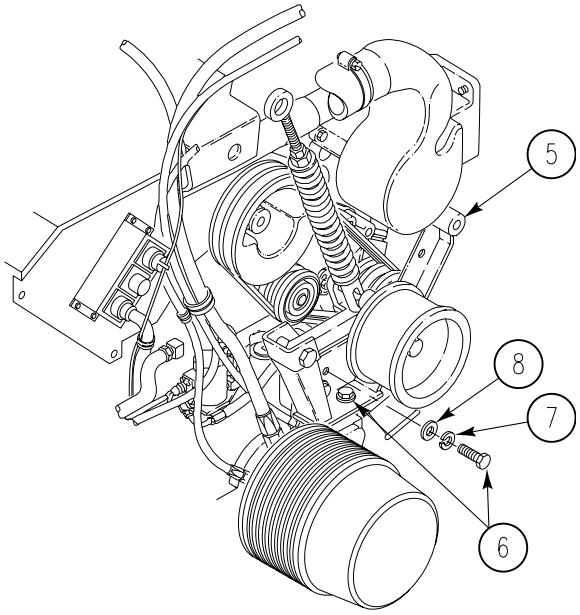

5. REMOVE SCREW (9), LOCKWASHER (10) WASHER (11) AND BRACKET (5) FROM ENGINE. DISCARD LOCKWASHER.

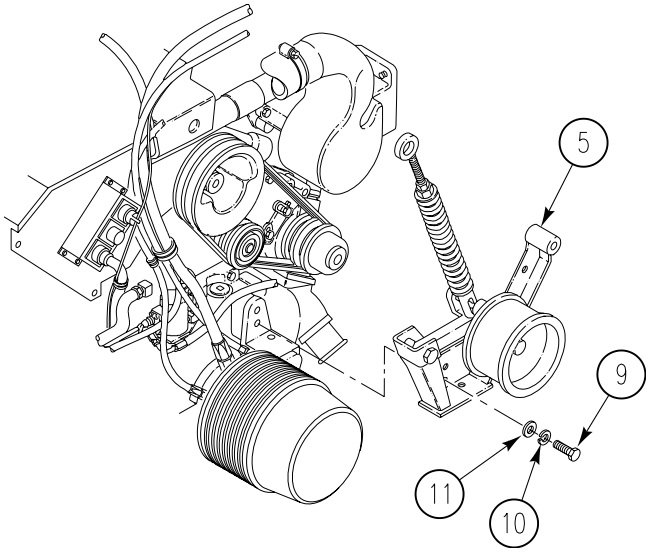

6. LOOSEN TWO SCREWS (12) SECURING IDLER ADJUSTING BRACKET (13) TO ENGINE.

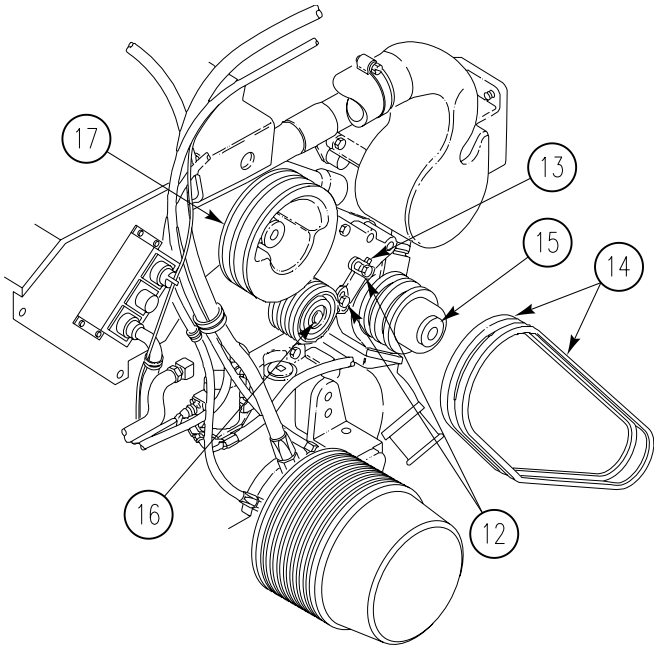

7. REMOVE TWO DRIVE BELTS (14) FROM THREE PULLEYS (15), (16) AND (17).

8. REMOVE TWO SCREWS (1), WASHERS (2), IDLER ADJUSTING BRACKET (3) AND IDLER PULLEY (4) FROM ENGINE.

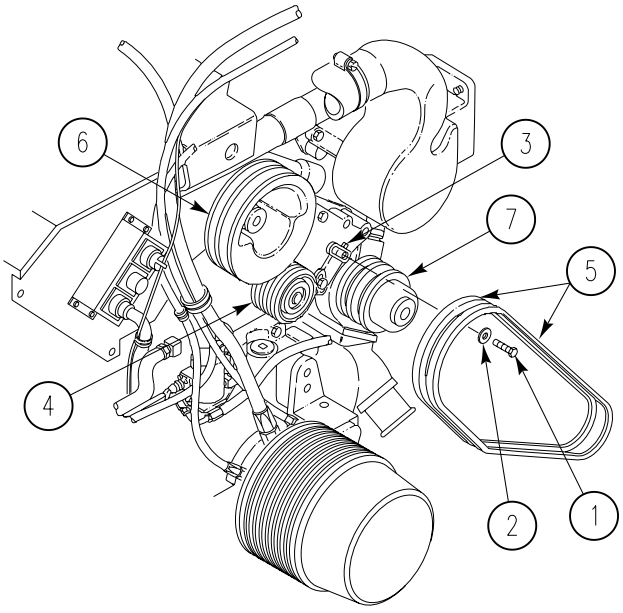

INSTALLATION

1. INSTALL IDLER PULLEY (4) AND IDLER ADJUSTING BRACKET (3) ON ENGINE. SECURE WITH TWO WASHERS (2) AND SCREWS (1). DO NOT TIGHTEN SCREWS.

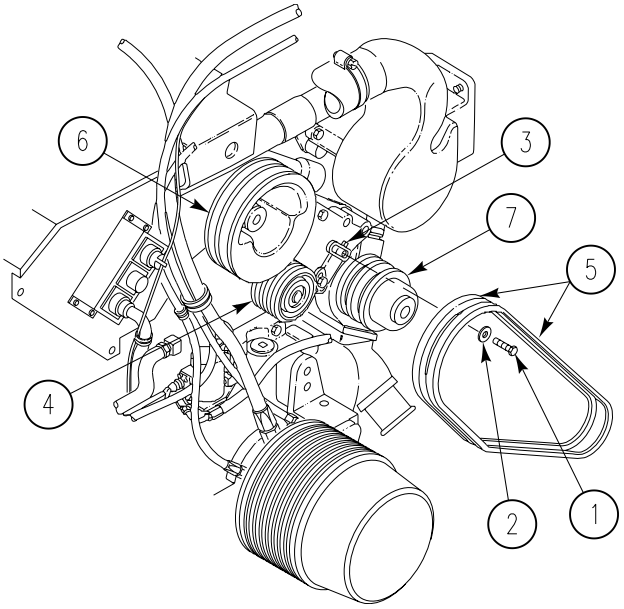

NOTE

Drive belts must be replaced in matched sets.

2. POSITION TWO DRIVE BELTS (5) ON THREE PULLEYS (4), (6) AND (7).
3. MOVE IDLER ADJUSTING BRACKET (3) TO OBTAIN 3/8 INCH (10MM) DEFLECTION WHEN TWO DRIVE BELTS (5) ARE DEPRESSED MIDWAY BETWEEN PULLEYS (6) AND (7).
4. TIGHTEN TWO SCREWS (1) TO 30–35 LB-FT (41–47 N·m) TORQUE. USE TORQUE WRENCH.
5. INSTALL BRACKET (8) ON ENGINE. SECURE WITH SCREW (9), NEW LOCKWASHER (10), AND WASHER (11).

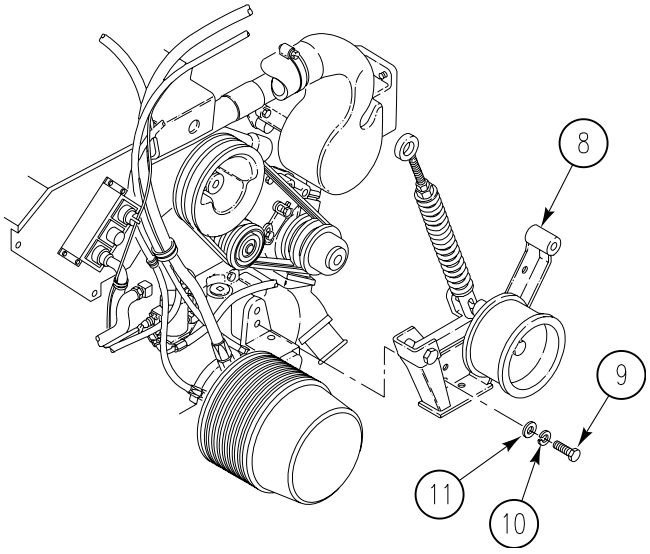

6. INSTALL TWO SCREWS (12), NEW LOCKWASHERS (13), WASHERS (14), ON BRACKET (8).

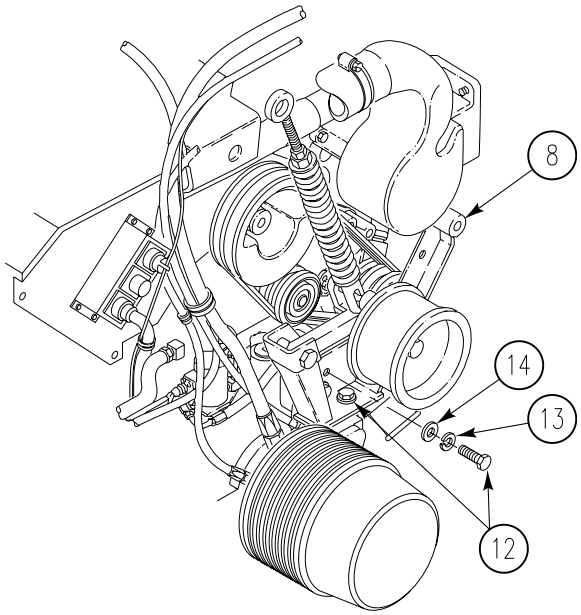

7. INSTALL SCREW (1), NEW LOCKWASHER (2), WASHER (3), AND TWO SPACERS (5) ON BRACKET (4).

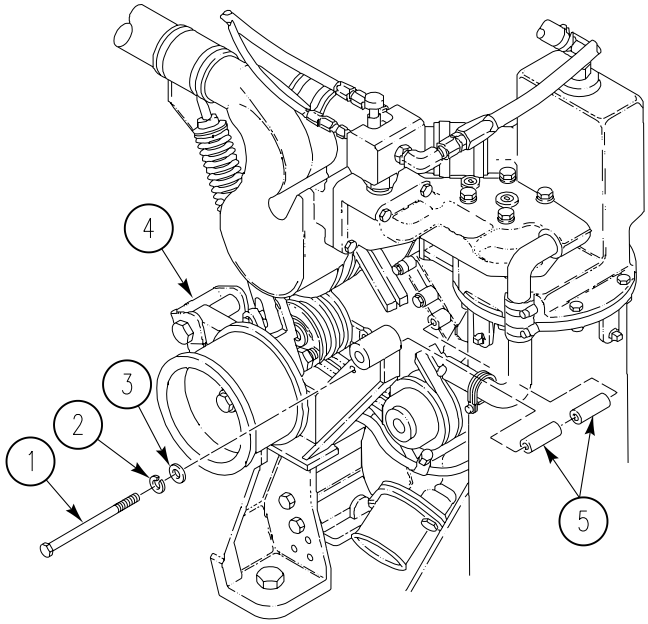

8. INSTALL WASHER (3) PULLEY (2), SCREW (1), WASHER (6) AND NEW LOCKNUT (5) ON BRACKET (4). TORQUE SCREW TO 50–55 LB-FT (68–75 N·m) USE TORQUE WRENCH.

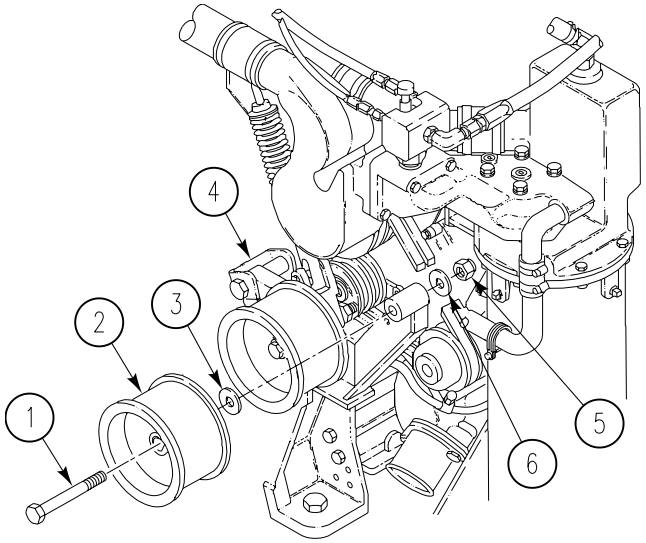

9. INSTALL PIN (10), SPRING TENSIONER (11), AND NEW COTTER PIN (12) ON BRACKET (5).

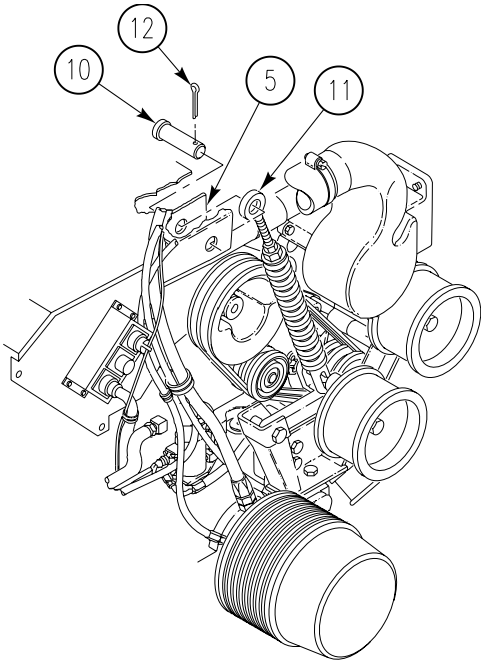

10. ROTATE TURRET TO 6400 MILS OR AS NEEDED. See TM 9-2350-366-10-2.

11. INSTALL VENTILATING FAN DRIVE BELT (WP 0148 00).

12. INSTALL POWER PLANT REAR ACCESS PANELS AND SUPPORT (WP 0309 00).

END OF TASK

REPLACE ENGINE COOLANT PUMP 0169 00

THIS WORK PACKAGE COVERS:

Removal (page 0169 00-1).
Installation (page 0169 00-5).

INITIAL SETUP:

Maintenance Level
Unit

Tools and Special Tools
General Mechanics Tool Kit (WP 0397 00, Item 64)

Materials/Parts
Gasket
Locknut
Lockwasher
Lockwasher
Lockwasher (2)
Lockwasher (4)

Personnel Required
Unit Mechanic 63T10

References
TM 9-2350-366-10-1

Equipment Condition
Power plant removed from vehicle (WP 0106 00)
Ventilating fan drive belt removed (WP 0148 00)

REMOVAL

1. REMOVE COTTER PIN (1), PIN (2) AND SPRING TENSIONER (3) FROM BRACKET (4).

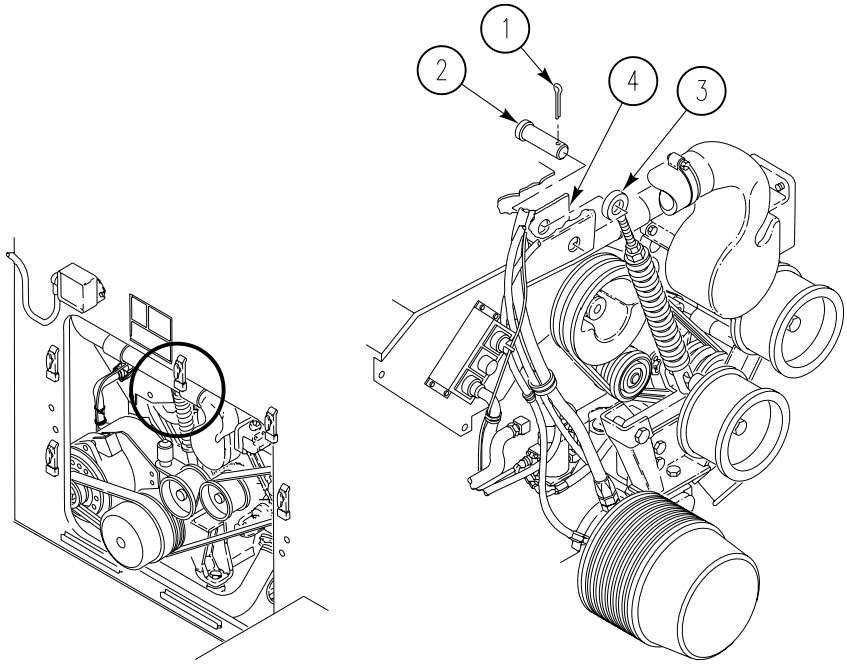

2. REMOVE LOCKNUT (5) WASHER (6) WASHER (3), SCREW (1), AND PULLEY (2) FROM BRACKET (4). DISCARD LOCKNUT.

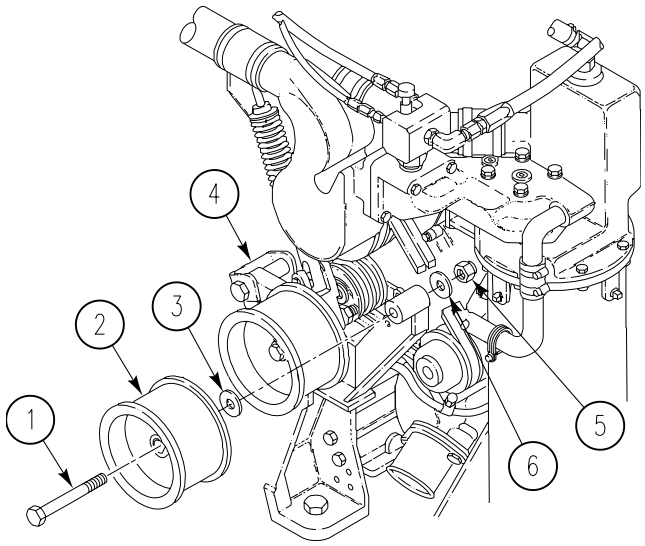

3. REMOVE SCREW (1), LOCKWASHER (2), WASHER (3), AND TWO SPACERS (5), FROM BRACKET (4). DISCARD LOCKWASHER.

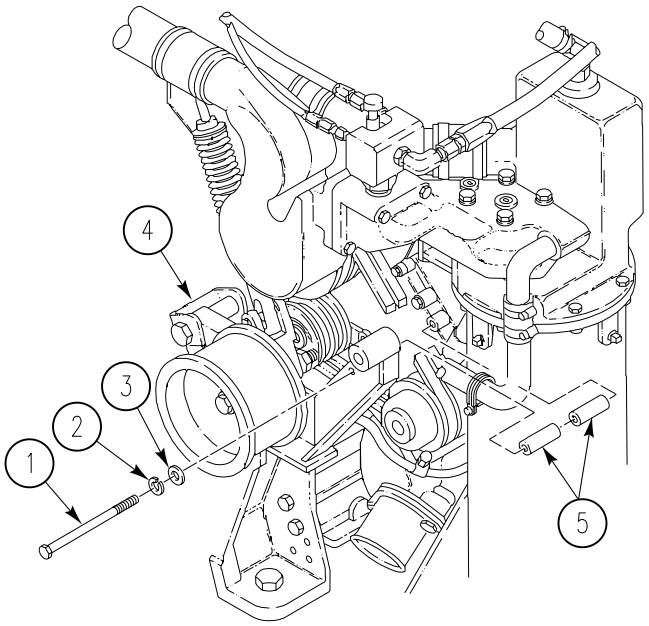

4. REMOVE TWO SCREWS (5), LOCKWASHERS (6), AND WASHERS (7) FROM BRACKET (1). DISCARD LOCKWASHERS.

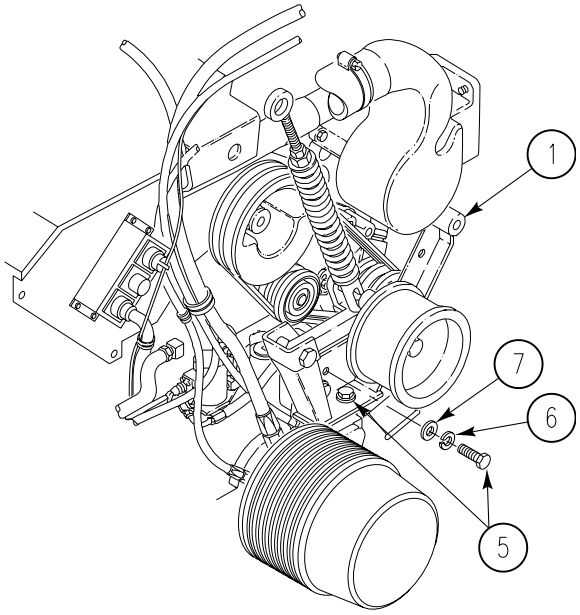

5. REMOVE SCREW (9), LOCKWASHER (10), WASHER (11) AND BRACKET (5) FROM ENGINE. DISCARD LOCKWASHER.

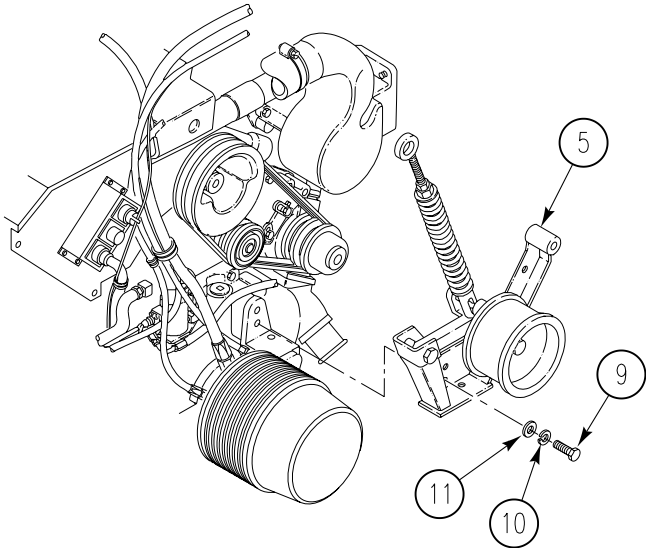

6. LOOSEN TWO SCREWS (12) SECURING IDLER ADJUSTING BRACKET (13) TO ENGINE.

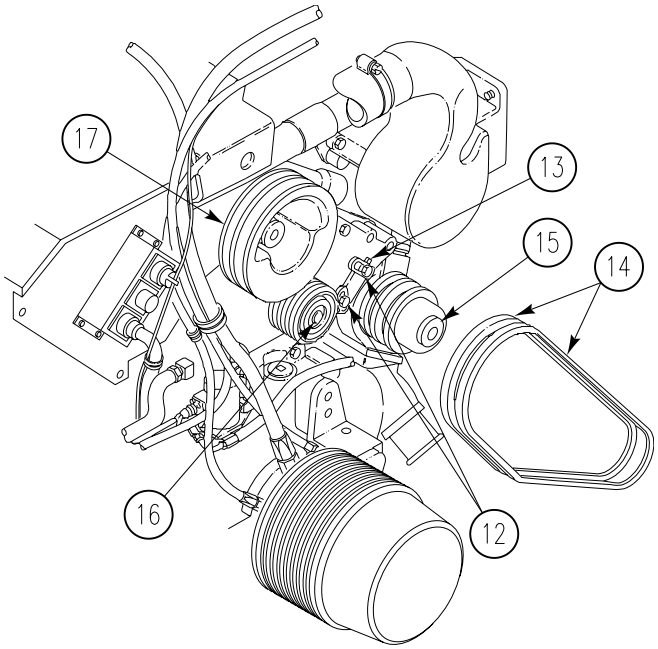

7. REMOVE TWO DRIVE BELTS (14) FROM THREE PULLEYS (15)(16)(17).

8. REMOVE TWO SCREWS (1) WASHERS (2), IDLER ADJUSTING BRACKET (3) AND IDLER PULLEY (4) FROM ENGINE.

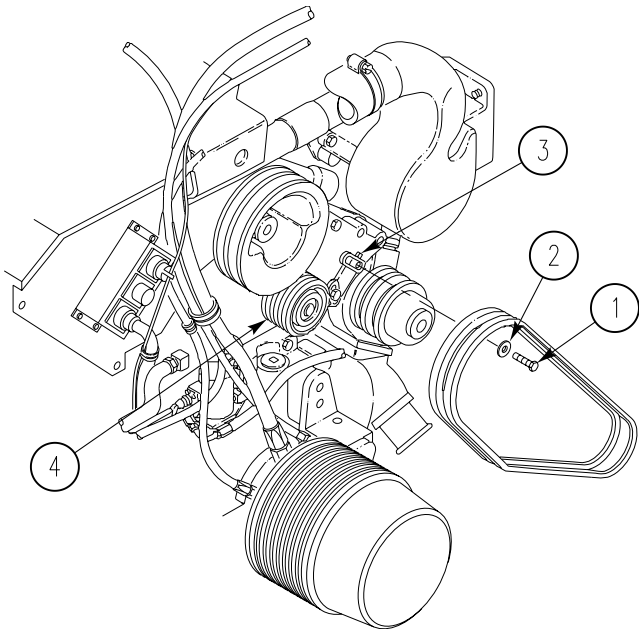

9. LOOSEN TWO CLAMPS (5) AND SLIDE BYPASS HOSE (6) UP ON THERMOSTAT TUBE (7).

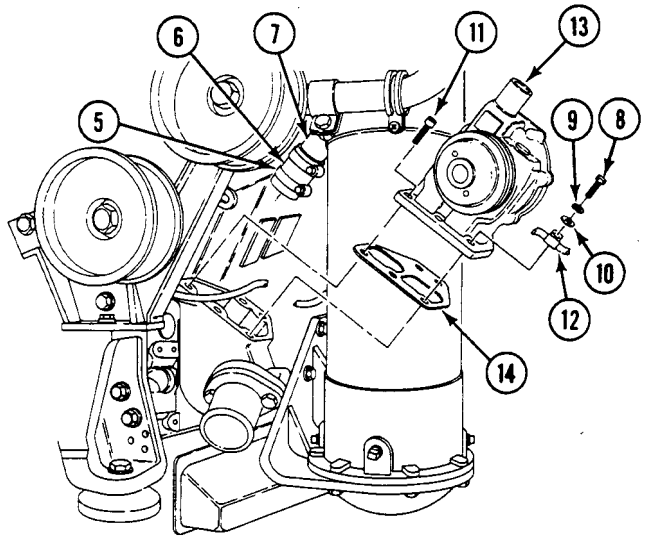

10. REMOVE FOUR CAP SCREWS (8) LOCKWASHERS (9), WASHERS (10), ONE SOCKET HEAD SCREW (11), HOSE BRACKET (12), COOLANT PUMP (13), AND GASKET (14) FROM OIL COOLER HOUSING. DISCARD LOCKWASHERS AND GASKET.

INSTALLATION

1. SECURE NEW GASKET (14), COOLANT PUMP (13), AND HOSE BRACKET (12) TO OIL COOLER HOUSING WITH ONE SOCKET HEAD SCREW (11), FOUR WASHERS (10), NEW LOCKWASHERS (9) AND CAP SCREWS (8).

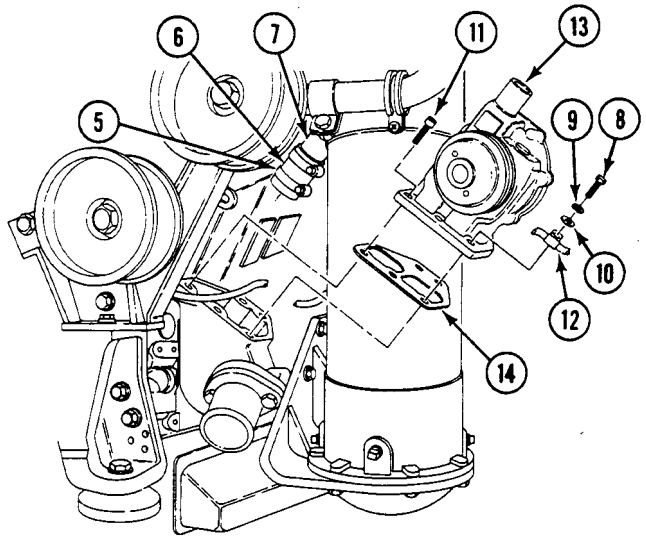

2. SECURE BYPASS HOSE (6) TO THERMOSTAT TUBE (7) AND COOLANT PUMP (13) WITH TWO CLAMPS (5).

3. INSTALL IDLER PULLEY (15) AND IDLER ADJUSTING BRACKET (16) ON ENGINE. SECURE WITH TWO WASHERS (17) AND SCREWS (18). DO NOT TIGHTEN SCREWS.

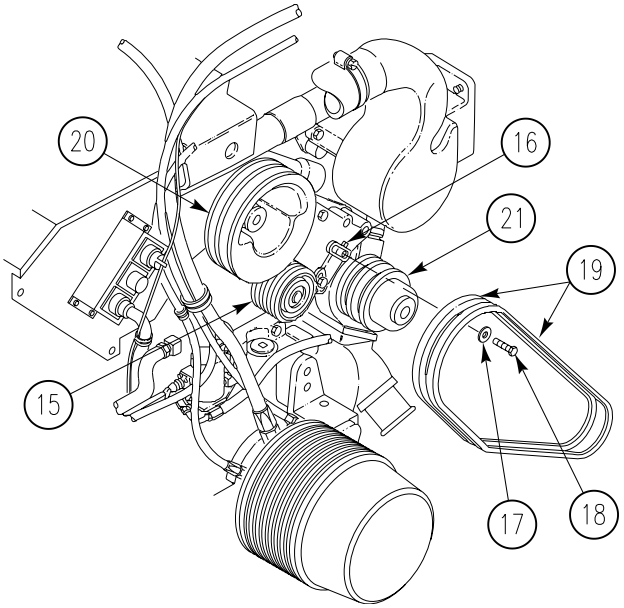

NOTE

Drive belts must be replaced in matched sets.

4. POSITION TWO DRIVES BELTS (19) ON THREE PULLEYS (15), (20), AND (21).

5. MOVE IDLER ADJUSTING BRACKET (16) TO OBTAIN A 3/8 INCH (10MM) DEFLECTION WHEN TWO DRIVE BELTS (19) ARE DEPRESSED MIDWAY BETWEEN PULLEYS (20) AND (21).

6. TIGHTEN TWO SCREWS (18), TO 30-35 LB-FT (41-47 N·m) TORQUE.

7. INSTALL BRACKET (1) ON ENGINE. SECURE WITH SCREW (2) NEW LOCKWASHER (3), AND WASHER (4).

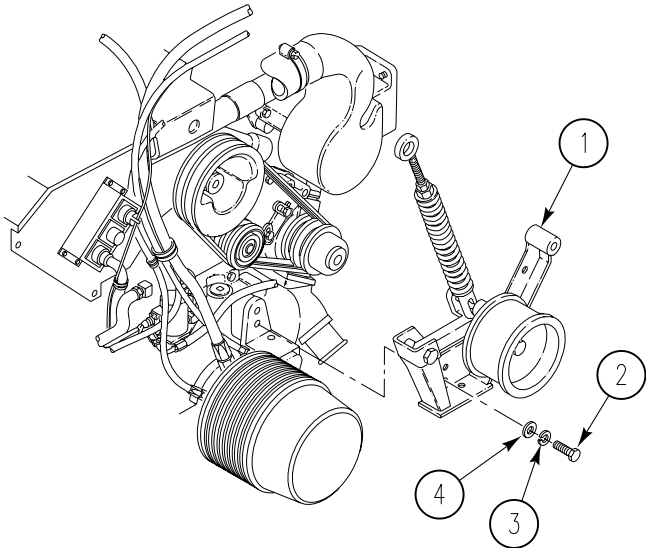

8. INSTALL TWO SCREWS (1), NEW LOCKWASHERS (2), AND WASHERS (3) ON BRACKET (4).

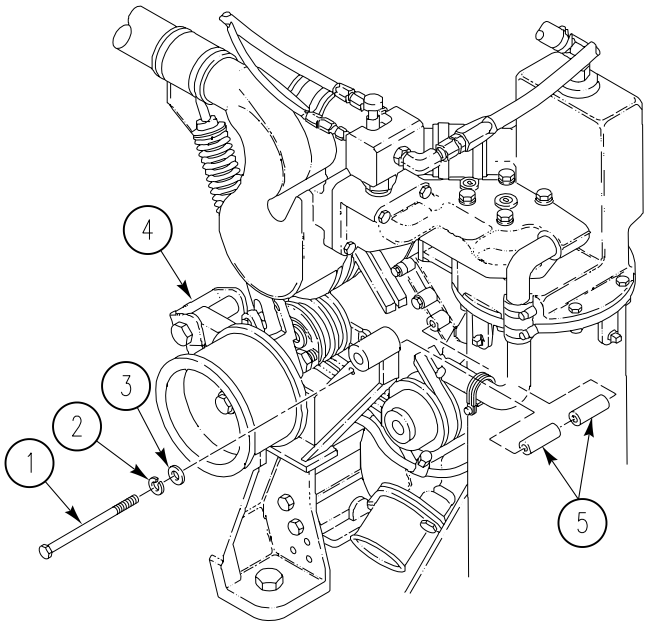

9. INSTALL SCREW (1), NEW LOCKWASHER (2), AND WASHER (3) AND TWO SPACERS (5) ON BRACKET (4).
10. INSTALL PULLEY (2), SCREW (1), WASHER (3), WASHER (6) AND NEW LOCKNUT (5) ON BRACKET (4).

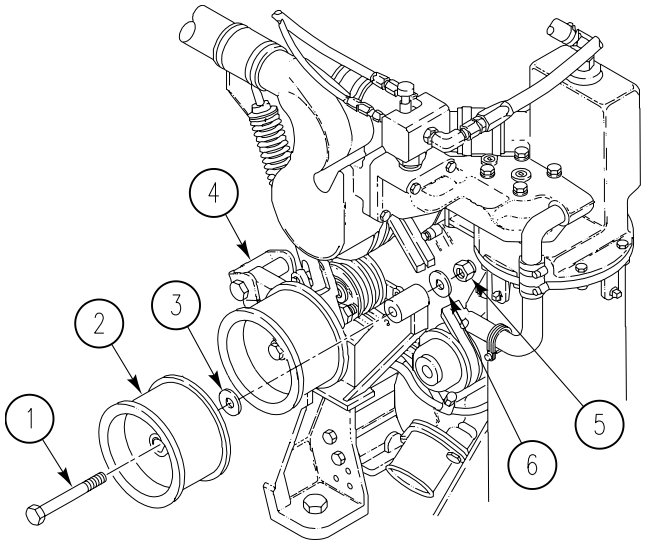

11. INSTALL PIN (1), SPRING TENSIONER (2), AND NEW COTTER PIN (3) ON BRACKET (4).

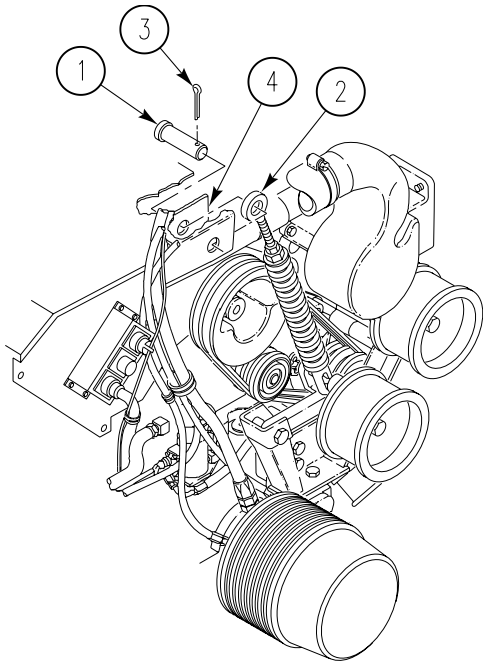

12. INSTALL VENTILATING FAN DRIVE BELT (WP 0148 00).
13. INSTALL POWER PLANT IN VEHICLE (WP 0106 00).

END OF TASK

CHAPTER 11

UNIT MAINTENANCE INSTRUCTIONS FOR GENERATOR

WORK PACKAGE INDEX

Title	Sequence No.
REPLACE GENERATOR TURNBUCKLE PARTS	0170 00
REPLACE GENERATOR/BRACKET	0171 00
ADJUST GENERATOR DRIVE BELT	0172 00
REPLACE GENERATOR DRIVE BELT	0173 00
REPLACE FLAT PULLEYS AND BEARINGS	0174 00
REPLACE IDLER ARM AND SPRING TENSIONER	0175 00
ADJUST VOLTAGE REGULATOR	0176 00
REPLACE REGULATOR ASSEMBLY	0177 00
REPLACE FAN AND GENERATOR VARIABLE SPEED DRIVE	0178 00

REPLACE GENERATOR TURNBUCKLE PARTS 0170 00

THIS WORK PACKAGE COVERS:

Removal (page 0170 00-1).
Installation (page 0170 00-2).

INITIAL SETUP:

Maintenance Level

Unit

Tools and Special Tools

General mechanics tool kit (WP 0397 00, Item 64)

Materials/Parts

Cotter pin
Lock washer

Personnel Required

Unit Mechanic 63T10

References

TM 9-2350-366-10-1
TM 9-2350-366-10-2

Equipment Condition

Engine stopped TM 9-2350-366-10-1
Vehicle blocked TM 9-2350-366-10-1
Turret rotated to 3200 mils TM 9-2350-366-10-2
Front VISMOD access doors removed (WP 0307 00)
Engine access cover plate removed (WP 0308 00)

REMOVAL

1. LOOSEN TWO GENERATOR MOUNTING BOLTS.
2. LOOSEN JAM NUT (1). ROTATE TURNBUCKLE (2) TO LOOSEN DRIVE BELT.

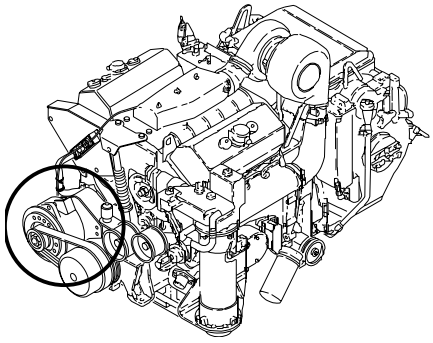

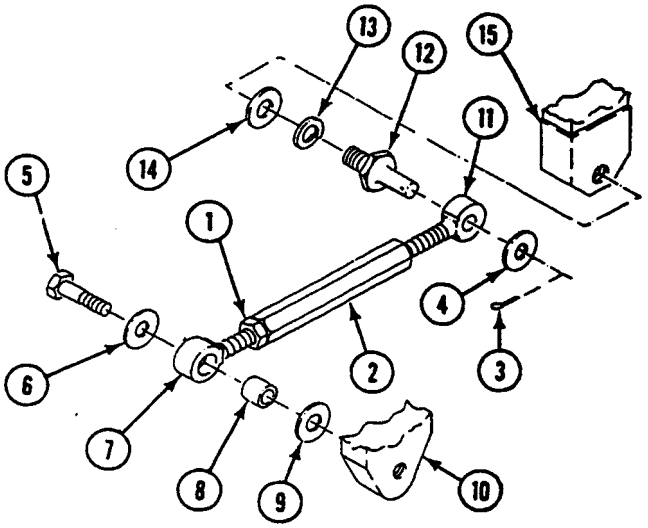

3. REMOVE COTTER PIN (3) AND WASHER (4). DISCARD COTTER PIN.

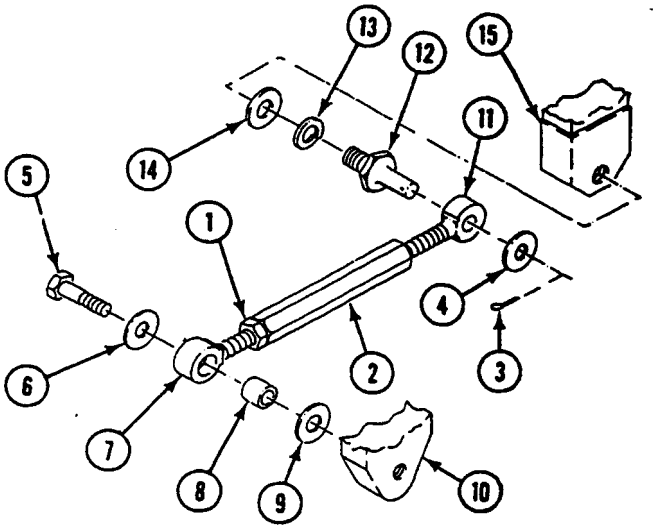

4. REMOVE SCREW (5), WASHER (6), TURNBUCKLE SCREW END (7), SPACER (8), AND WASHER (9) FROM GENERATOR (10).
5. REMOVE TURNBUCKLE SCREW ENDS (7) AND (11) FROM TURNBUCKLE SLEEVE (2).
6. REMOVE PIN (12), LOCK WASHER (13), AND WASHER (14) FROM BRACKET (15). DISCARD LOCK WASHER.

INSTALLATION

1. INSTALL WASHER (14), NEW LOCK WASHER (13), AND PIN (12) IN BRACKET (15).

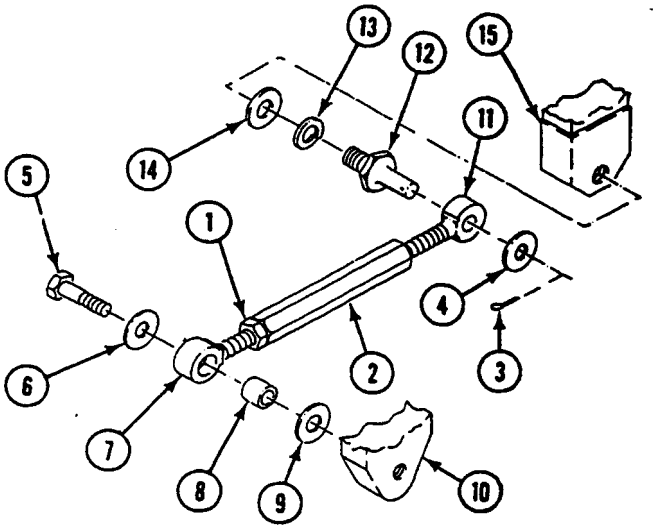

2. INSTALL JAM NUT (1) ON SCREW END (7). INSTALL SCREW ENDS (7) AND (11) INTO TURNBUCKLE SLEEVE (2). CENTER SCREW ENDS IN SLEEVE.
3. INSTALL SCREW END (11) ON PIN (12) AND SECURE WITH WASHER (4) AND NEW COTTER PIN (3).

4. INSTALL WASHER (6), SCREW (5), AND SPACER (8) IN SCREW END (7). INSTALL WASHER (9) ON SCREW (5) AND SECURE TO GENERATOR (10).
5. ADJUST GENERATOR DRIVE BELT (WP 0147 00).
6. INSTALL ENGINE ACCESS COVER PLATE (WP 0308 00).
7. INSTALL FRONT VISMOD ACCESS DOORS (WP 0307 00).
8. ROTATE TURRET TO 6400 MILS OR AS NEEDED. See TM 9-2350-366-10-2.

END OF TASK

REPLACE GENERATOR/BRACKET 0171 00

THIS WORK PACKAGE COVERS:

Removal (page 0171 00-1).
Installation (page 0171 00-3).

INITIAL SETUP:

Maintenance Level

Unit

Tools and Special Tools

General mechanic's tool kit (WP 0397 00, Item 64)
Torque wrench, 1/2 inch drive, 0-150 ft-lb (WP 0397 00, Item 82)

Materials/Parts

Locknut (2)
Key

Personnel Required

Unit Mechanic 63T10
Helper (H)

References

TM 9-2350-366-10-1
TM 9-2350-366-10-2

Equipment Condition

Engine stopped (TM 9-2350-366-10-1)
Vehicle blocked (TM 9-2350-366-10-1)
Driver's power plant access panel removed (TM 9-2350-366-10-1)
Power plant lower rear access panel removed (TM 9-2350-366-10-1)
Disconnect battery ground strap (WP 0237 00)
Generator drive belt removed (WP 0173 00)

REMOVAL

1. REMOVE NUT (7), WASHER (8), AND GROUND LEAD (9) FROM GENERATOR (2).
2. REMOVE HARNESS CIRCUIT LEAD (1) FROM GENERATOR (2).
3. REMOVE SCREW (6), TWO WASHERS (5), SPACER (4), AND TURNBUCKLE (3) FROM GENERATOR (2).

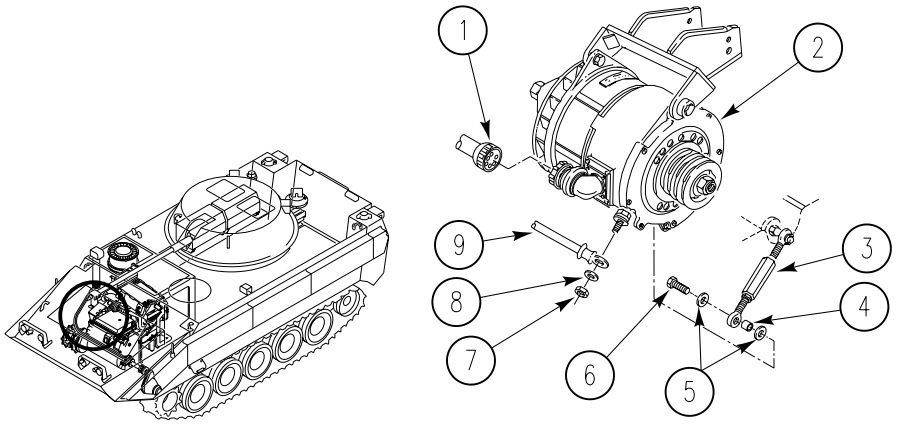

WARNING

Generator weighs 80 lb (37kg) and can cause back injury if handled improperly. Be sure to use a hoist or a helper to remove generator.

4. REMOVE TWO SCREWS (1), LOCKNUTS (2), AND THREE WASHERS (3) FROM GENERATOR (9). HAVE HELPER ASSIST. DISCARD LOCKNUTS.

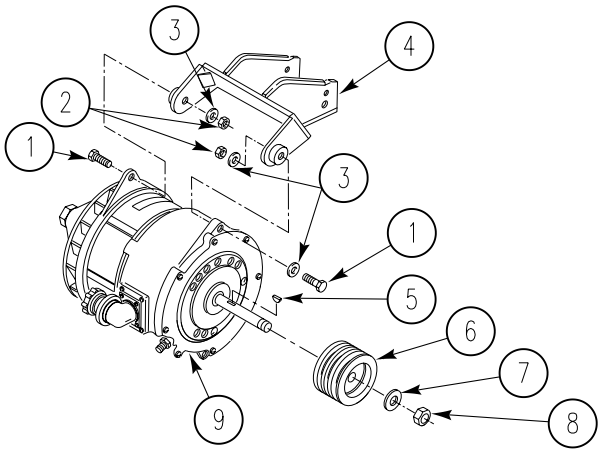

NOTE

Do Step 5 if bracket needs to be removed.

5. REMOVE THREE SCREWS (2), (5), AND (6), WASHERS (3), (4), AND (7), AND BRACKET (1) FROM ENGINE BLOCK.

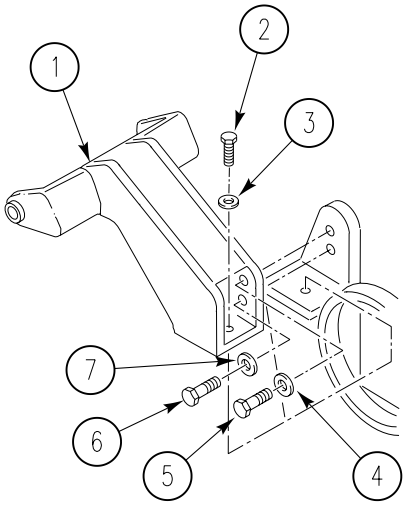

6. REMOVE NUT (8), WASHER (7), PULLEY (6), AND KEY (5) FROM GENERATOR (9). DISCARD NUT, WASHER, AND KEY.

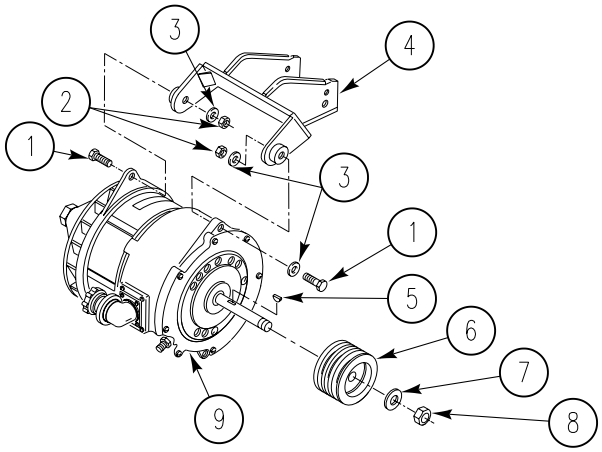

INSTALLATION

NOTE

Use nut and washer furnished with the new generator.

1. INSTALL NEW KEY (5) AND PULLEY (6) ON NEW GENERATOR (9). SECURE WITH NEW NUT (8) AND WASHER (7).

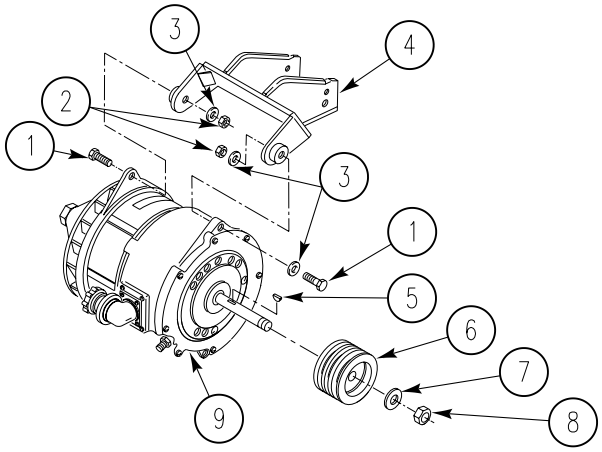

NOTE

The pulley locknut must be tightened. Do Steps 2 - 6. Performing these steps locks the shaft in place with no damage. After the locknut is tightened, the generator is ready to be installed.

2. LOOP PULLEY BELT (1) ON BOTTOM GROOVE OF PULLEY (2).

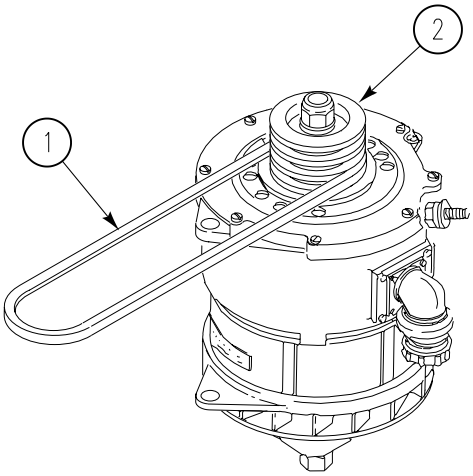

3. CROSS PULLEY BELT (1) AND PUT OTHER LOOP ON TOP GROOVE OF PULLEY (2).

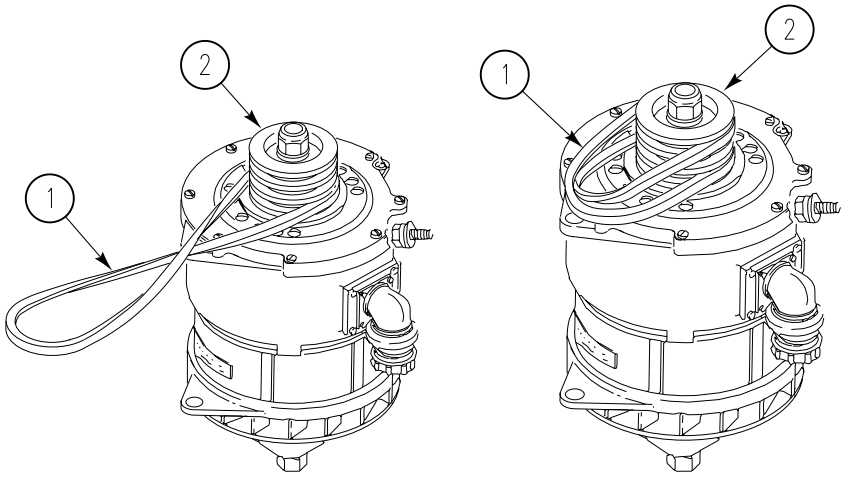

4. STRETCH CROSSED END OF PULLEY BELT (1) OVER GENERATOR MOUNTING EAR (4).

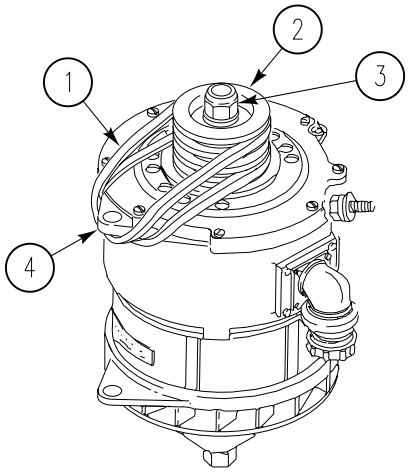

5. TIGHTEN NUT (3) TO 70-75 FT-LB (95-102 N·m).

6. REMOVE PULLEY BELT (1) FROM PULLEY (2).

NOTE

Do Steps 7 - 8 if bracket was removed.

Do not tighten bracket mounting screws until all mounting screws have been installed. All three screws require a specific torque.

7. POSITION BRACKET (1) ON ENGINE BLOCK AND INSTALL SCREW (2) AND WASHER (3). ALIGN BRACKET HOLES WITH BLOCK HOLES AND INSTALL SCREWS (6) AND (5), AND WASHERS (7)(4).

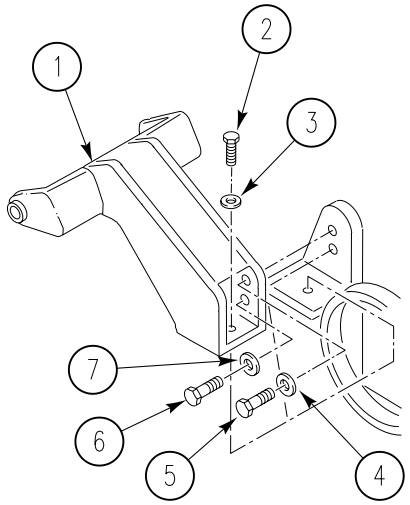

8. TORQUE SCREWS AS FOLLOWS:

   a. TORQUE SCREW (2) TO 32–34 FT-LB (43–46 N·m).

   b. TORQUE SCREW (6) TO 36–38 FT-LB (49–52 N·m).

   c. TORQUE SCREW (5) TO 32–34 FT-LB (43–46 N·m).

NOTE

Use bushing furnished with new generator.

9. INSTALL GENERATOR (9) ON BRACKET (4). SECURE WITH TWO SCREWS (1), NEW LOCKNUTS (2), AND THREE WASHERS (3).

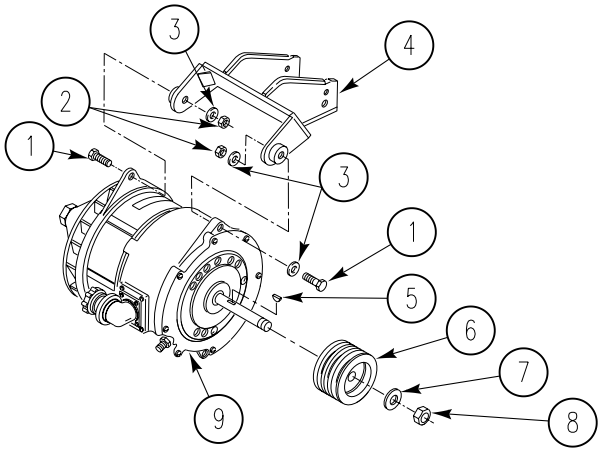

10. INSTALL TURNBUCKLE (3) ON GENERATOR (2). SECURE WITH SCREW (6), TWO WASHERS (5), AND SPACER (4).

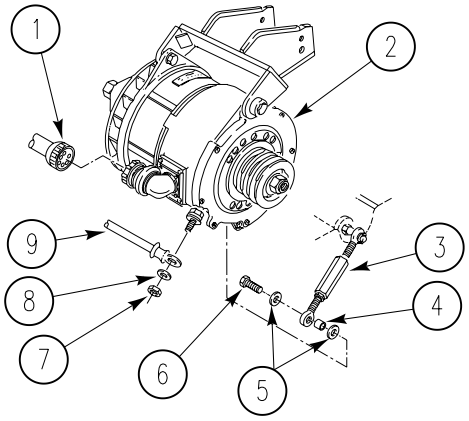

11. INSTALL HARNESS CIRCUIT LEAD (1) ON GENERATOR (2).
12. INSTALL GROUND LEAD (9) ON GENERATOR (2). SECURE WITH NUT (7) AND WASHER (8).
13. INSTALL GENERATOR DRIVE BELT (WP 0173 00).
14. ADJUST GENERATOR DRIVE BELT (WP 0172 00).
15. TORQUE SCREWS SECURING GENERATOR TO BRACKET TO 36–38 FT-LB (49–52 N·m).
16. INSTALL POWER PLANT LOWER REAR ACCESS PANEL. See TM 9-2350-366-10-1.
17. INSTALL DRIVER'S POWER PLANT ACCESS PANEL. See TM 9-2350-366-10-1.
18. ROTATE TURRET TO 6400 MILS. See TM 9-2350-366-10-2.

END OF TASK

ADJUST GENERATOR DRIVE BELT 0172 00

THIS WORK PACKAGE COVERS:

Adjustment (page 0172 00-1).

INITIAL SETUP:

Maintenance Level

Unit

Tools and Special Tools

General mechanic's tool kit (WP 0397 00, Item 64)
Tensiometer, v-belt (WP 0397 00, Item 58)
Torque wrench, 1/2 inch drive, 0-175 ft-lb (WP 0397 00, Item 64)
Yardstick (WP 0397 00, Item 85)(WP 0397 00, Item 86)

Personnel Required

Unit mechanic 63T10

References

TM 9-2350-366-10-1
TM 9-2350-366-10-2

Equipment Condition

Engine stopped (TM 9-2350-366-10-1)
Vehicle blocked (TM 9-2350-366-10-1)
Turret rotated to 3200 mils (TM 9-2350-366-10-2)
Power plant rear access panels removed (WP 0309 00)
Driver's power plant access panel removed (WP 0312 00)

NOTE

To allow for initial belt stretching, make sure belt tension is rechecked after 30 minutes of operation.

ADJUSTMENT

1. CHECK GENERATOR DRIVE BELT (5) FOR DAMAGE. IF DAMAGED, REPLACE DRIVE BELT (WP 0173 00).
2. POSITION LOWER O-RING (2) ON TENSIOMETER (1) AT MAXIMUM ALLOWABLE BELT DEFLECTION OF 1/4 INCH (0.6 CM) TO 3/8 INCH (1.0 CM).
3. POSITION UPPER O-RING (1) ON TENSIOMETER TO ZERO.

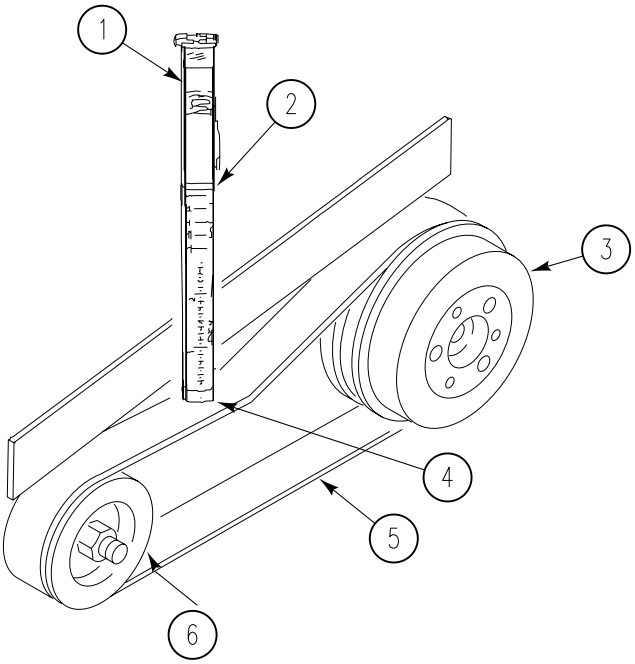

ADJUST GENERATOR DRIVE BELT — Continued **0172 00**

4. PLACE YARDSTICK (7) ON PULLEYS (6) AND (3).
5. PLACE TENSIOMETER (1) ON BELT (4) AT MIDSPAN AND AT A RIGHT ANGLE TO BELT.
6. PRESS TOP OF TENSIOMETER (1) UNTIL LOWER O-RING ALIGNS WITH BOTTOM OF YARDSTICK (7). REMOVE TENSIOMETER.
7. TAKE TENSIOMETER READING AT POINT WHERE UPPER O-RING STOPPED. INITIAL READING MUST BE 15-17 LBS (7-8 KG). AFTER 30 MINUTES OF OPERATION, READING MUST BE 12-14 LBS (5-6 KG).
8. ADJUST DRIVE BELT AS FOLLOWS:

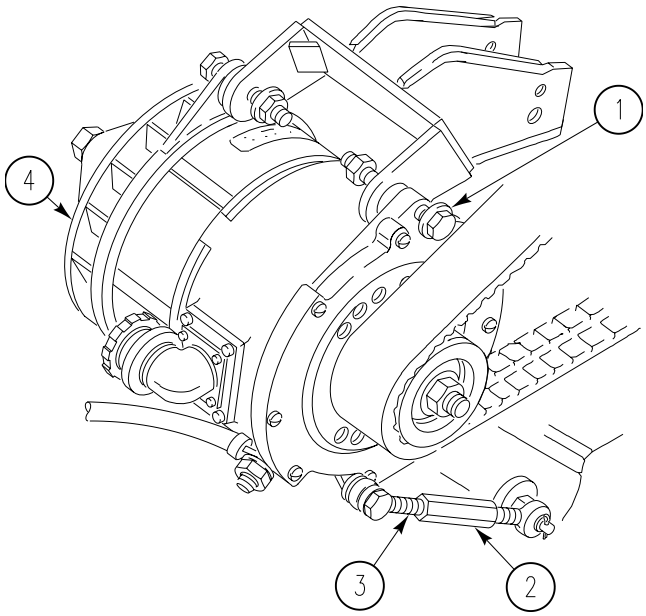

   a. Loosen two support screws (1) on top of generator (4).
   b. Loosen jamnut (3) and adjust turnbuckle (2) until belt is at the right tension. Tighten jamnut
   c. TORQUE TWO SUPPORT SCREWS TO 56-61 FT-LB (76-81 N·m).
9. INSTALL REAR POWER PLANT ACCESS PANELS. See (WP 0309 00).
10. INSTALL DRIVER'S POWER PLANT ACCESS PANEL (WP 0312 00).
11. INSTALL POWER PLANT REAR ACCESS PANELS (WP 0309 00).
12. ROTATE TURRET TO 6400 MILS. See TM 9-2350-366-10-2.

END OF TASK

REPLACE GENERATOR DRIVE BELT 0173 00

THIS WORK PACKAGE COVERS:

Removal (page 0173 00-1).
Installation (page 0173 00-2).

INITIAL SETUP:

Maintenance Level

Unit

Tools and Special Tools

General mechanic's tool kit (WP 0397 00, Item 64)

Personnel Required

Unit Mechanic 63T10

References

TM 9-2350-366-10-1
TM 9-2350-366-10-2

Equipment Condition

Engine stopped (TM 9-2350-366-10-1)
Vehicle blocked (TM 9-2350-366-10-1)
Rotate turret to 3200 mils (TM 9-2350-366-10-2)
Power plant rear access panels removed (WP 0309 00)
Driver's power plant access panel removed (WP 0312 00)
Personnel heater duct removed (WP 0369 00)

REMOVAL

1. LOOSEN TURNBUCKLE JAMNUT (5).
2. LOOSEN TWO GENERATOR MOUNTING SCREWS (1) AND (2).
3. LOOSEN TURNBUCKLE (4) AND REMOVE DRIVE BELT (3). DISCARD BELT.

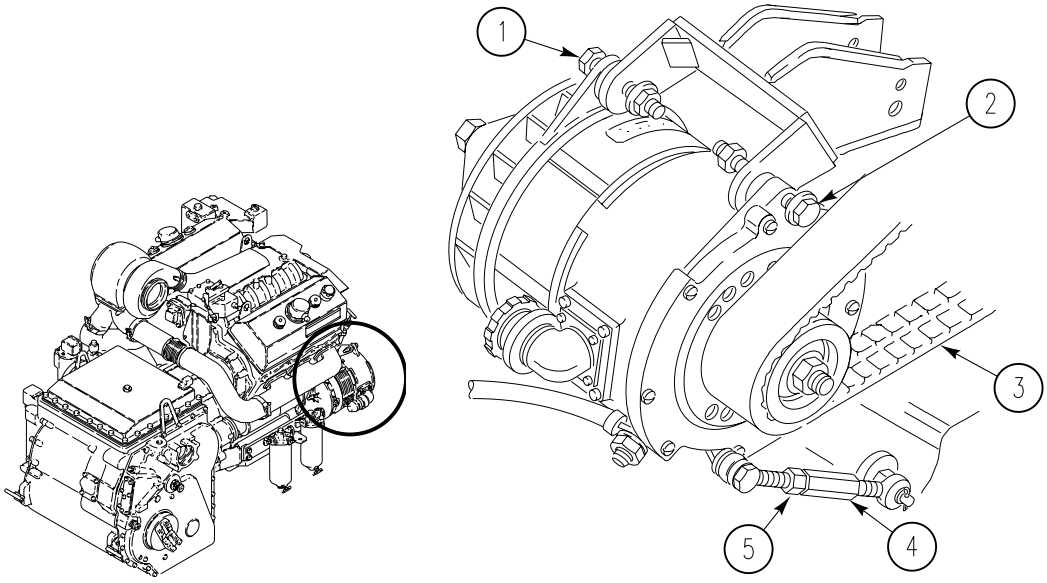

INSTALLATION

1. INSTALL NEW DRIVE BELT (3).

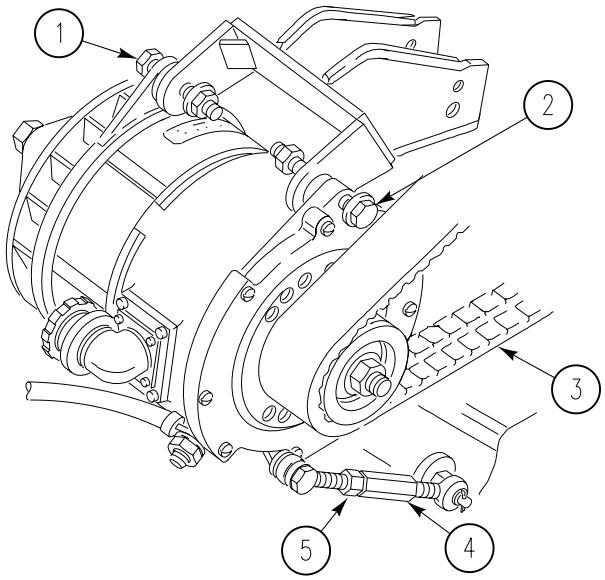

2. ADJUST DRIVE BELT (WP 0172 00).
3. INSTALL PERSONNEL HEATER DUCT (WP 0369 00).
4. INSTALL DRIVER'S POWER PLANT ACCESS PANEL (WP 0312 00).
5. INSTALL POWER PLANT LOWER REAR ACCESS PANEL (WP 0309 00).
6. ROTATE TURRET TO 6400 MILS. See TM 9-2350-366-10-2.

END OF TASK

REPLACE FLAT PULLEYS AND BEARINGS 0174 00

THIS WORK PACKAGE COVERS:

Removal (page 0174 00-1).
Installation (page 0174 00-4).

INITIAL SETUP:

Maintenance Level

Unit

Tools and Special Tools

General Mechanic's Tool Kit (WP 0397 00, Item 64)
Retaining Ring Pliers Set (WP 0397 00, Item 32)
Torque Wrench (WP 0397 00, Item 78)

Materials/Parts

Locknut
Locknut (4)

Personnel Required

Unit Mechanic 63T10

References

TM 9-2350-366-10-1
TM 9-2350-366-10-2

Equipment Condition

Engine stopped (TM 9-2350-366-10-1)
Vehicle blocked (TM 9-2350-366-10-1)
Turret rotated to 3200 mils (TM 9-2350-366-10-2)
Power plant rear access panels removed (WP 0309 00)
Driver's power plant access panel removed (WP 0312 00)
Ventilating fan drive belt removed (WP 0147 00)

REMOVAL

1. REMOVE FOUR SCREWS (1), LOCKNUTS (2), AND PANEL SUPPORT (3) FROM HULL. DISCARD LOCKNUTS.

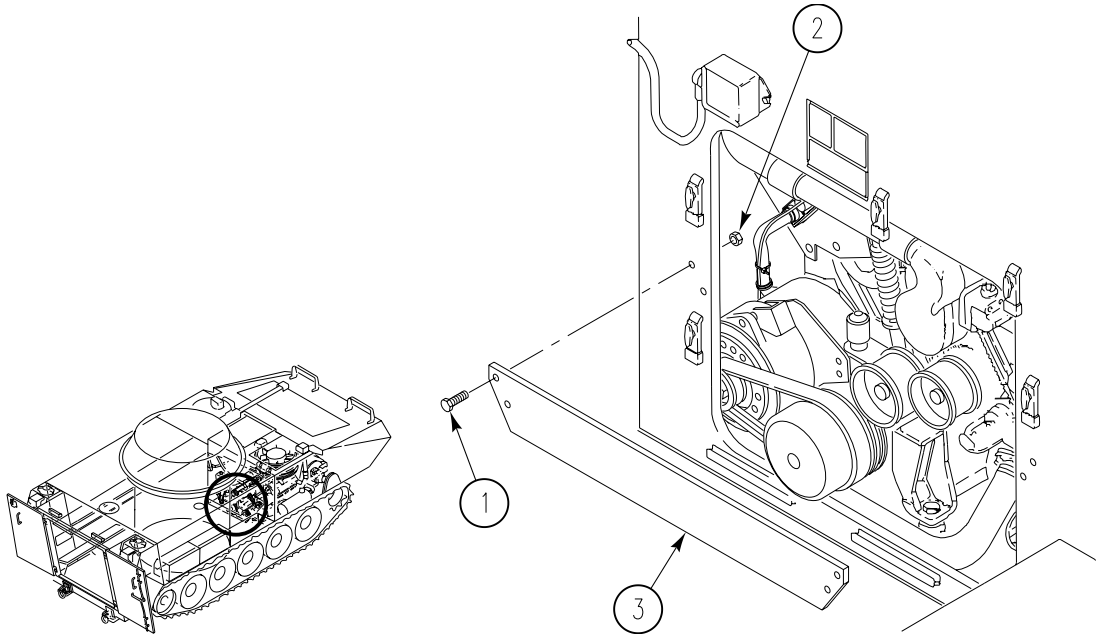

NOTE

Two pulleys are removed in the same way.

2. REMOVE LOCKNUT (4) AND WASHER (5) FROM BOLT (6). DISCARD LOCKNUT.

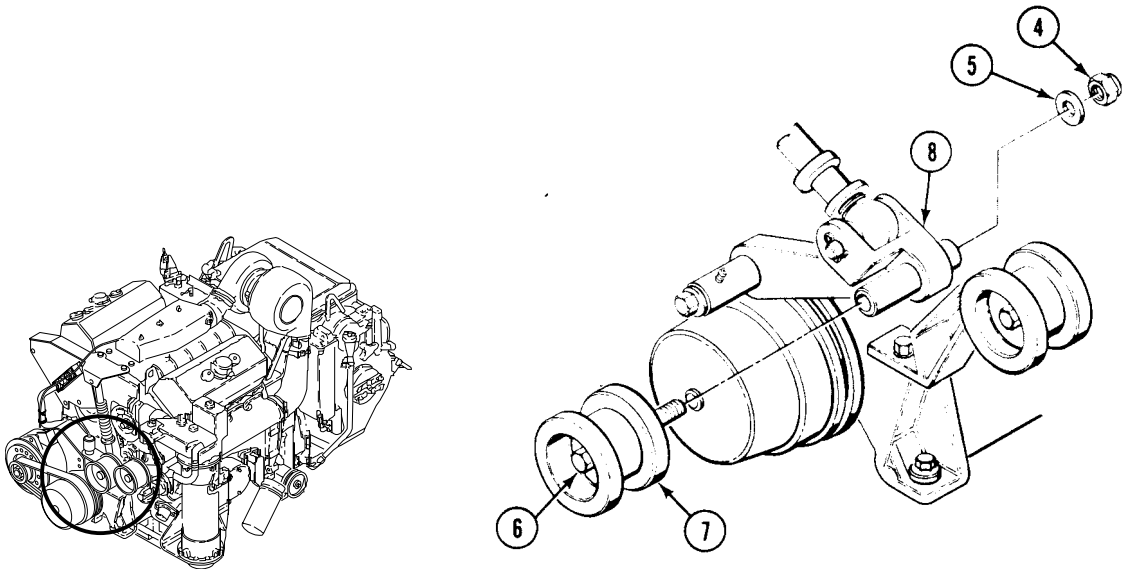

3. REMOVE BOLT (6) AND PULLEY (7) FROM BRACKET (8).

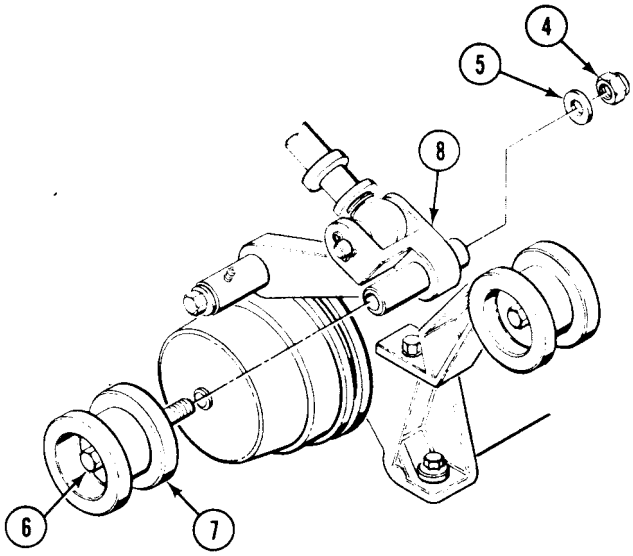

4. REMOVE BOLT (1), RING (2), TWO BEARINGS (3), AND SPACER (4) FROM PULLEY (5).

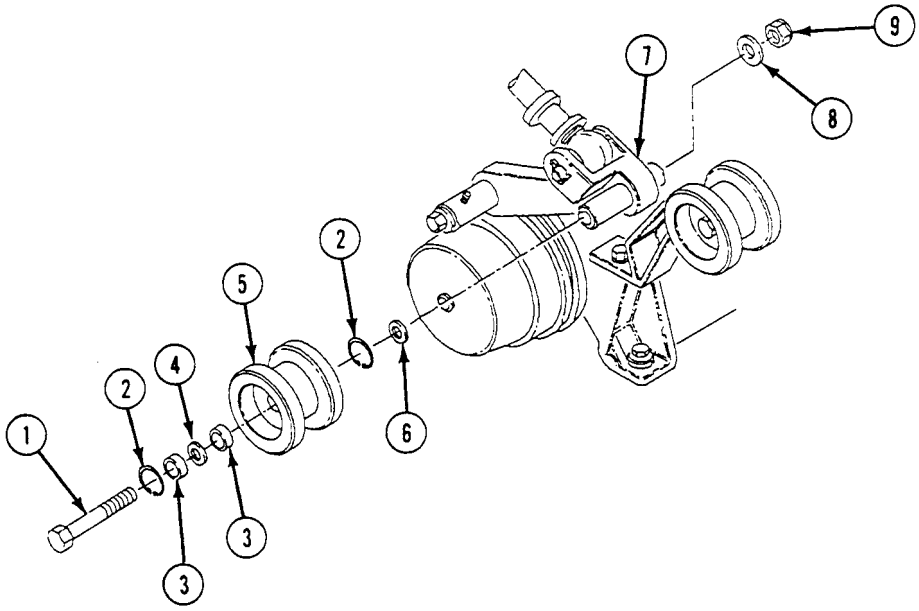

5. REMOVE WASHER (6) AND OTHER RING (2) FROM PULLEY (5).

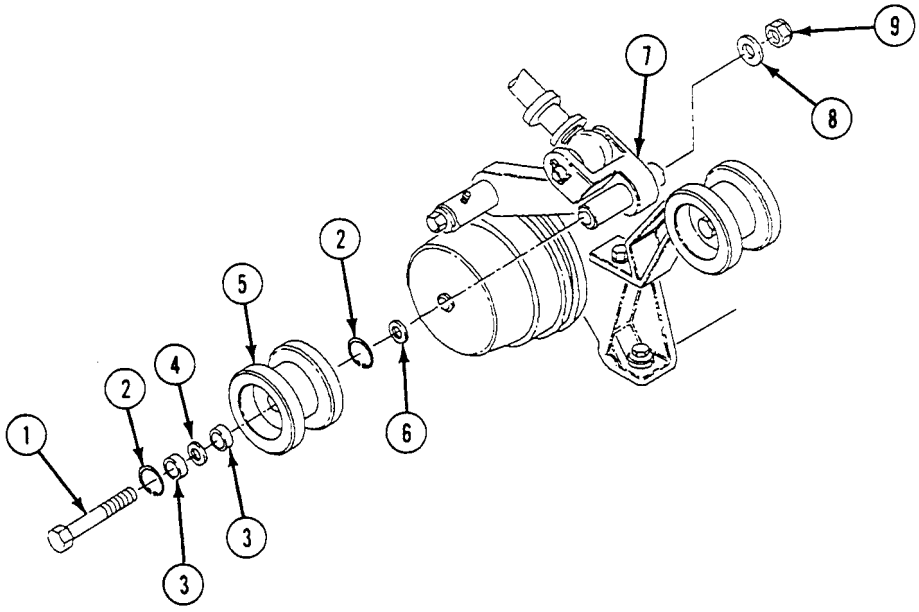

INSTALLATION

1. INSTALL RING (2) AND WASHER (6) ON PULLEY (5).

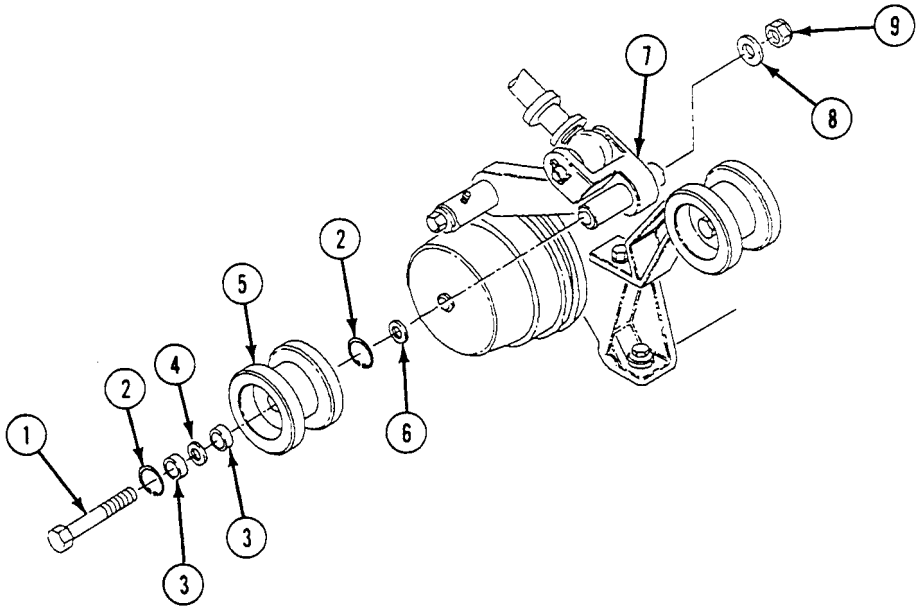

2. INSTALL BEARING (3), SPACER (4), SECOND BEARING (3) AND OTHER RING (2) ON PULLEY (5).

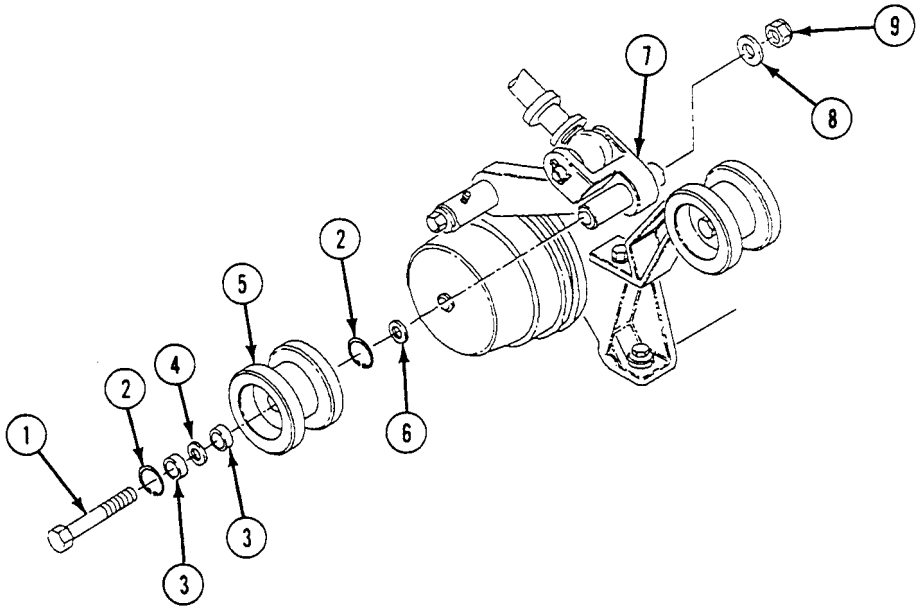

3. INSTALL BOLT (1) THROUGH TWO BEARINGS (3) AND BRACKET (7). SECURE WITH WASHER (8) AND NEW LOCKNUT (9). TIGHTEN BOLT TO 50-55 LB-FT (68-75 N·m) TORQUE.

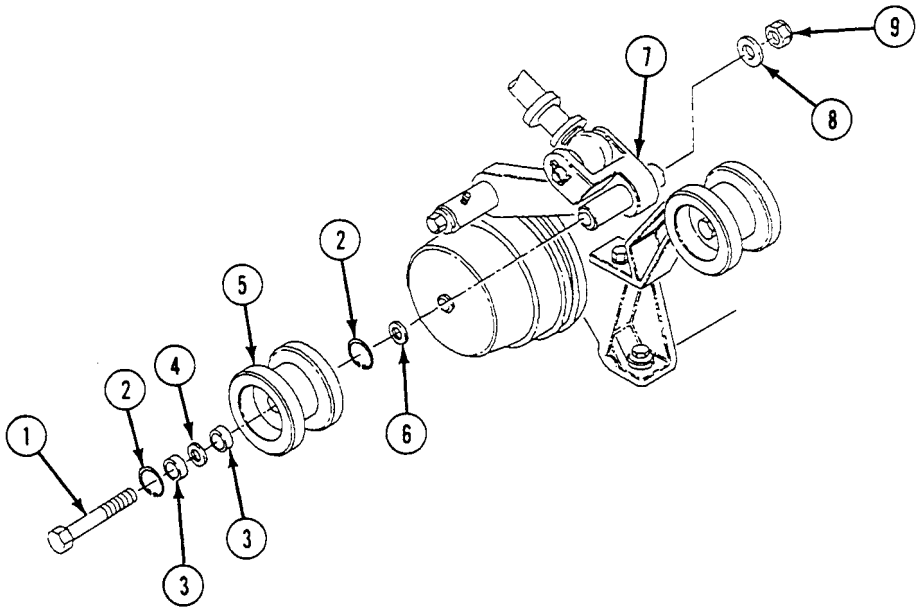

4. INSTALL PANEL SUPPORT (3) ON HULL. SECURE WITH FOUR SCREWS (1) AND NEW LOCKNUTS (2).

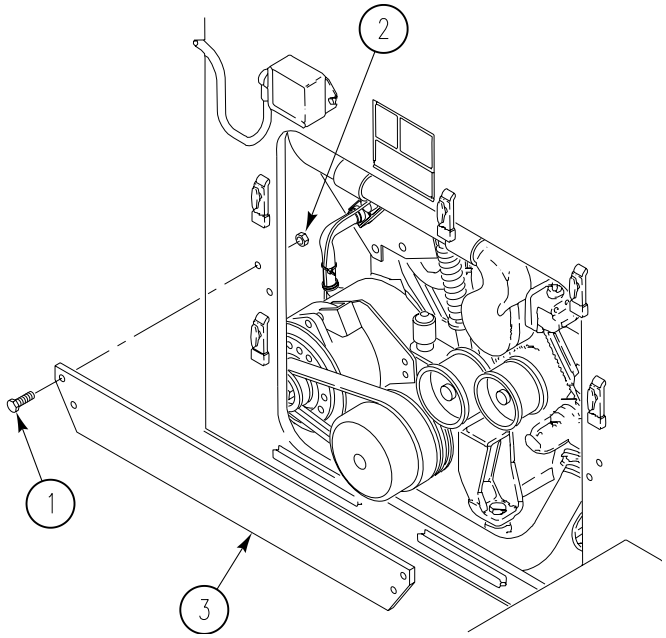

5. INSTALL VENTILATING FAN DRIVE BELT (WP 0147 00).

6. INSTALL DRIVER'S POWER PLANT ACCESS PANEL (WP 0312 00).

7. INSTALL POWER PLANT REAR ACCESS PANELS (WP 0309 00).

END OF TASK

REPLACE IDLER ARM AND SPRING TENSIONER 0175 00

THIS WORK PACKAGE COVERS:

Removal (page 0175 00-1).
Installation (page 0175 00-3).

INITIAL SETUP:

Maintenance Level

Unit

Tools and Special Tools

General Mechanic's Tool Kit (WP 0397 00, Item 64)

Materials/Parts

Cotter pin (2)
Locknut

Personnel Required

Unit Mechanic 63T10

References

TM 9-2350-366-10-1
TM 9-2350-366-10-1

Equipment Condition

Engine stopped (TM 9-2350-366-10-1)
Carrier blocked (TM 9-2350-366-10-1)
Turret rotated to 3200 mils (TM 9-2350-366-10-2)
Power plant rear access panels removed (WP 0309 00)
Driver's power plant access panel removed (WP 0312 00)
Flat pulley removed (WP 0174 00)

REMOVAL

1. REMOVE COTTER PIN (1) AND PIN (2) FROM BRACKET (3). DISCARD COTTER PIN.
2. REMOVE COTTER PIN (4) AND PIN (5) FROM IDLER ARM (6). REMOVE SPRING TENSIONER (7). DISCARD COTTER PIN.

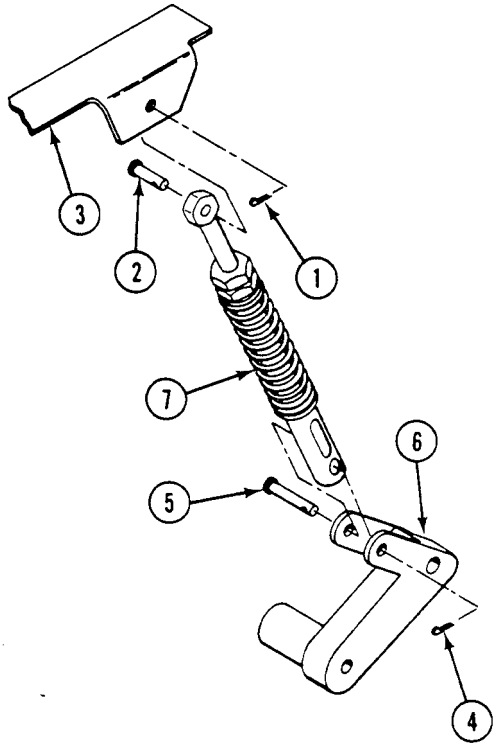

REPLACE IDLER ARM AND SPRING TENSIONER — Continued **0175 00**

3. REMOVE SCREW (8), WASHER (9), AND LOCKNUT (10) FROM IDLER ARM (6) AND BRACKET (11). REMOVE IDLER ARM. DISCARD LOCKNUT.

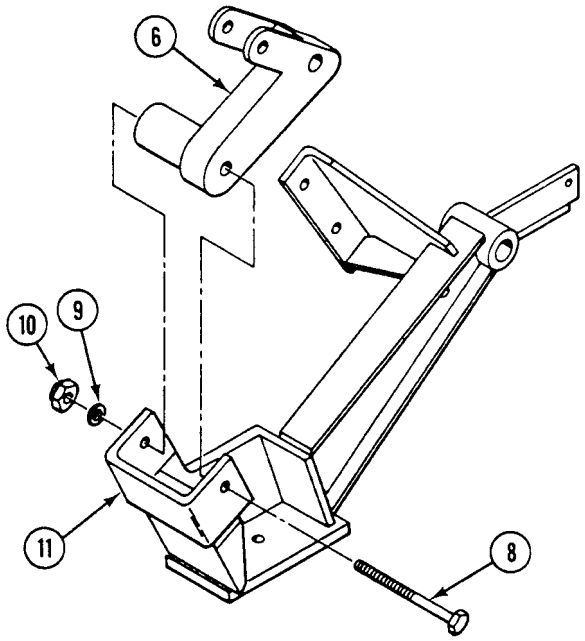

INSTALLATION

1. INSTALL IDLER ARM (1) ON BRACKET (2) AND SECURE WITH SCREW (3), WASHER (4), AND NEW LOCKNUT (5).

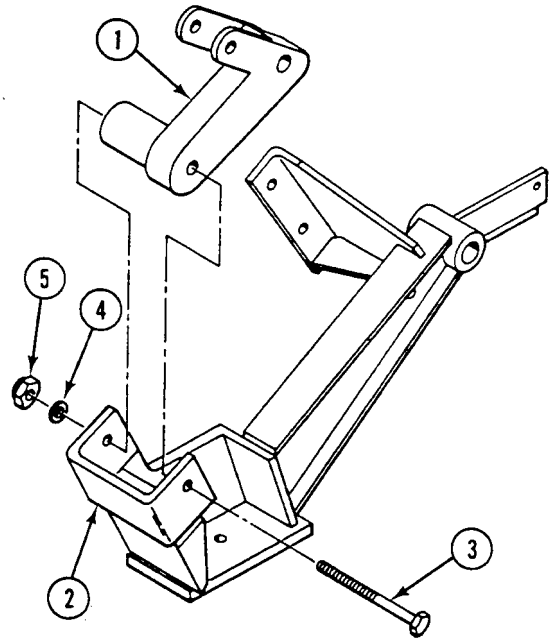

2. INSTALL SPRING TENSIONER (6) ON BRACKET (7). SECURE WITH PIN (8) AND NEW COTTER PIN (9).

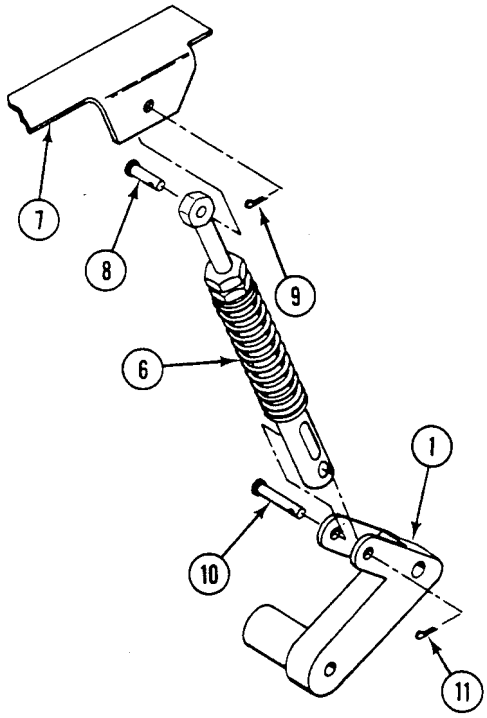

3. INSTALL SPRING TENSIONER (6) ON IDLER ARM (1). SECURE WITH PIN (10) AND NEW COTTER PIN (11).

4. INSTALL FLAT PULLEY (WP 0174 00).
5. INSTALL DRIVER'S POWER PLANT ACCESS PANEL (WP 0312 00).
6. INSTALL POWER PLANT REAR ACCESS PANELS (WP 0309 00).

END OF TASK

ADJUST VOLTAGE REGULATOR 0176 00

THIS WORK PACKAGE COVERS:

Adjustment (page 0176 00-1)

INITIAL SETUP:

Maintenance Level
Unit

Tools and Special Tools
General Mechanic's Tool Kit (WP 0397 00, Item 64)
Multimeter (WP 0397 00, Item 30)

Personnel Required
Unit Mechanic 63T10

References
TM 9-2350-366-10-1

Equipment Condition
Engine stopped (TM 9-2350-366-10-1)
Vehicle blocked (TM 9-2350-366-10-1)

ADJUSTMENT

NOTE

Check batteries to make sure they are fully charged (WP 0076 00).

1. REMOVE ACCESS SCREW (4) FROM REGULATOR (5).

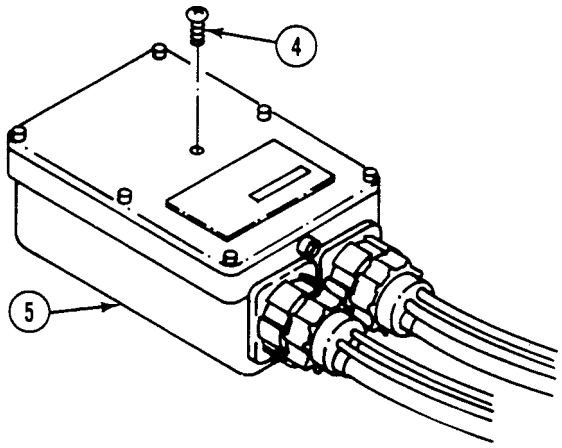

2. START ENGINE AND ALLOW TO RUN FOR ABOUT 20 MINUTES WITH SERVICE HEADLIGHTS ON. See TM 9-2350-366-10-1.

3. TURN OFF SERVICE HEADLIGHTS. See TM 9-2350-366-10-1.

4. SET MULTIMETER TO READ VOLTAGE ON THE 50 V DC SCALE.

5. REMOVE RECEPTACLE CAP (3).

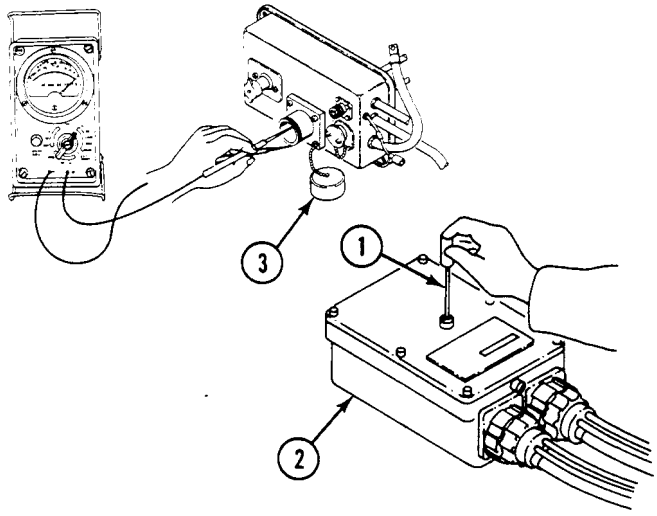

6. PLACE RED LEAD (4) IN POSITIVE SOCKET OF NATO PLUG (5) ON AUXILIARY POWER (SLAVE) RECEPTACLE (6). TOUCH NEGATIVE LEAD (7) TO OUTSIDE OF NATO PLUG (8) ON RECEPTACLE.

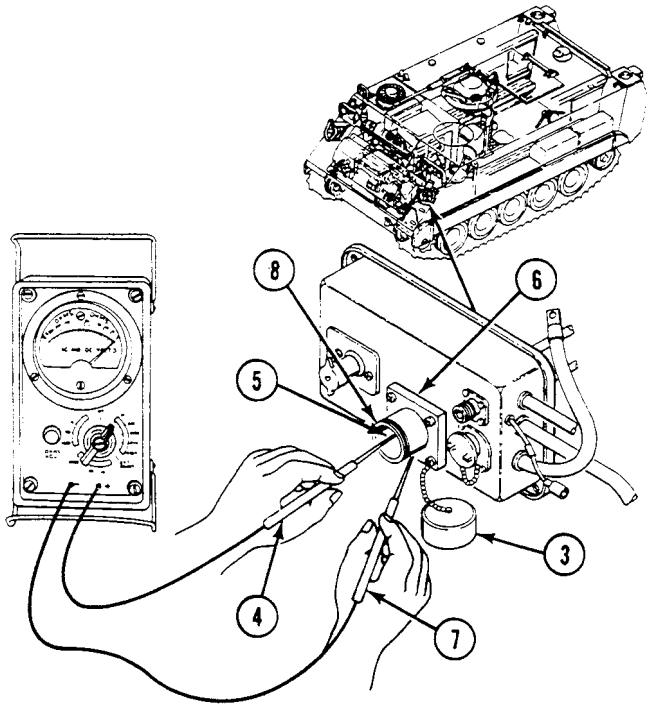

CAUTION

BATTERY CAN GET OVERCHARGED AND EXPLODE IF THE CHARGING VOLTS EXCEED 29. ADJUST VOLTAGE REGULATOR TO 29 VOLTS.

NOTE

DO NOT FORCE ADJUSTING SCREW PAST STOP. IF REGULATOR CANNOT BE ADJUSTED, REPLACE BAD REGULATOR (WP 0177 00).

USE INSULATED CROSS-TIP SCREW DRIVER #1 TO ADJUST VOLTAGE.

7. WITH ENGINE OPERATING AT 900 TO 1100 RPM, TURN ADJUSTING SCREW (1) IN REGULATOR (2) UNTIL PROPER VOLTAGE READING IS ACHIEVED.

90° and above:	27 V dc
50° thru 89°:	28 V dc
49° and below:	29 V dc

8. INSTALL RECEPTACLE CAP (3).

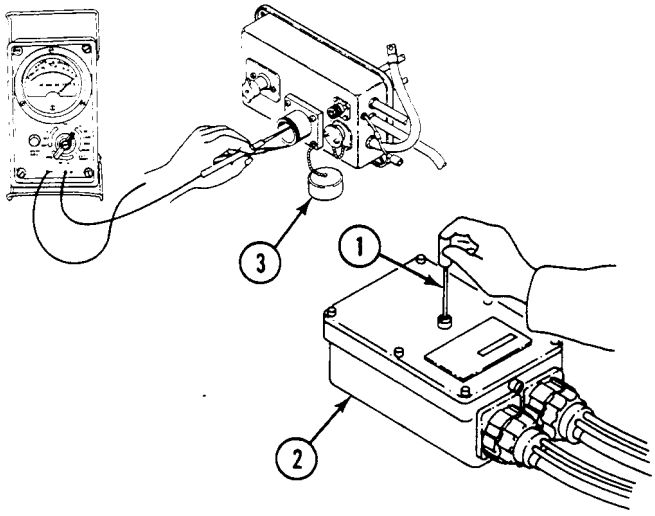

9. STOP ENGINE. See TM 9-2350-366-10-1.

10. INSTALL ACCESS SCREW (4) ON REGULATOR (5).

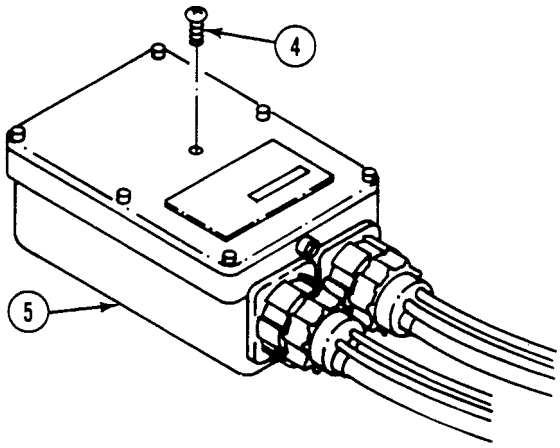

END OF TASK

REPLACE REGULATOR ASSEMBLY 0177 00

THIS WORK PACKAGE COVERS:

Removal (page 0177 00-1).
Repair/Replace (page 0177 00-2).
Installation (page 0177 00-2).

INITIAL SETUP:

Maintenance Level

Unit

References

TM 9-2350-366-10-1

Tools and Special Tools

General Mechanic's Tool Kit (WP 0397 00, Item 64)

Equipment Condition

Engine stopped (TM 9-2350-366-10-1)
Vehicle blocked (TM 9-2350-366-10-1)
Battery ground strap disconnected (WP 0237 00).

Materials/Parts

Lockwasher (8)
Lockwasher (8)
Lockwasher

Personnel Required

Unit Mechanic 63T10

REMOVAL

1. DISCONNECT TWO CANNON PLUGS (1) AND (2) FROM REGULATOR (3).

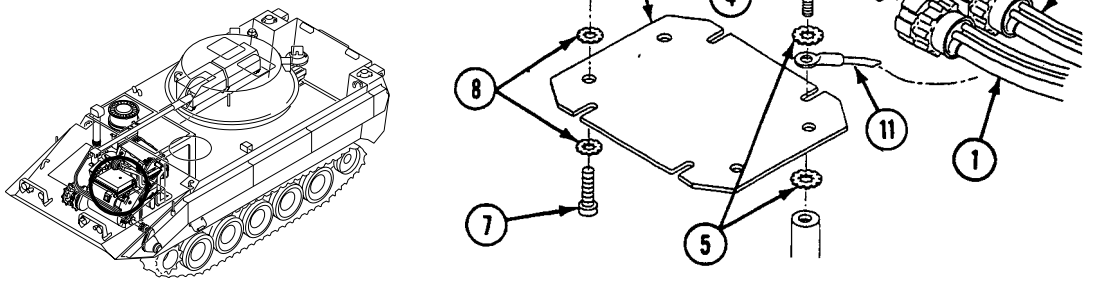

2. REMOVE FOUR SCREWS (4), EIGHT LOCKWASHERS (5), GROUND STRAP (11), AND MOUNT PLATE (6) WITH ATTACHED REGULATOR (3) FROM HULL WELDNUTS. DISCARD LOCKWASHERS.
3. REMOVE FOUR SCREWS (7), EIGHT LOCKWASHERS (8), AND MOUNT PLATE (6) FROM REGULATOR (3). DISCARD LOCKWASHERS.
4. REMOVE NUT (9), LOCKWASHER (10), AND GROUND STRAP (11) FROM REGULATOR (3). DISCARD LOCKWASHER.

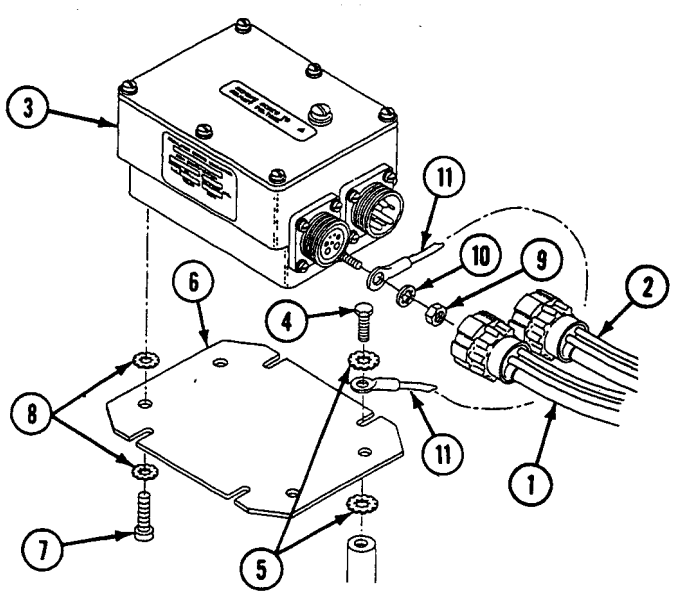

REPAIR OR REPLACEMENT

1. CHECK CABLES. REPAIR WORN OR CRACKED CABLES AND DAMAGED CONNECTORS. (WP 0189 00).

INSTALLATION

1. INSTALL GROUND STRAP (11), NEW LOCKWASHER (10), AND NUT (9) ON REGULATOR (3).

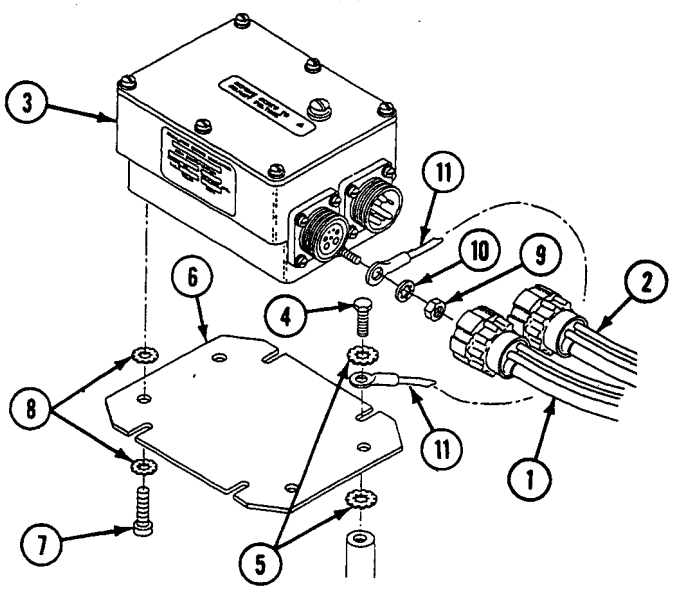

2. INSTALL MOUNT PLATE (6) ON REGULATOR (3) WITH EIGHT NEW LOCKWASHERS (8) AND FOUR SCREWS (7).
3. INSTALL MOUNT PLATE (6) WITH REGULATOR (3) AND GROUND STRAP (11) ON HULL WELDNUTS WITH EIGHT NEW LOCKWASHERS (5) AND FOUR SCREWS (4).
4. CONNECT TWO CANNON PLUGS (1) AND (2) TO REGULATOR (3).
5. CONNECT BATTERY GROUND STRAP (WP 0237 00).
6. ADJUST REGULATOR VOLTAGE (WP 0176 00).

END OF TASK

REPLACE FAN AND GENERATOR VARIABLE SPEED DRIVE 0178 00

THIS WORK PACKAGE COVERS:

Removal (page 0178 00-1).
Installation (page 0178 00-2).

INITIAL SETUP:

Maintenance Level

Unit

Tools and Special Tools

General Mechanic's Tool Kit (WP 0397 00, Item 64)
Torque Wrench (WP 0397 00, Item 83)

Materials/Parts

Packing
Packing
Packing

Personnel Required

Unit Mechanic 63T10

References

TM 9-2350-366-10-1
TM 9-2350-366-10-2

Equipment Condition

Engine stopped TM 9-2350-366-10-1
Vehicle blocked TM 9-2350-366-10-1
Turret rotated to 3200 mils TM 9-2350-366-10-2
Power plant rear access panels removed (WP 0309 00)
Driver's power plant access panel removed (WP 0312 00)
Fan drive belt removed (WP 0148 00)
Generator drive belt removed (WP 0173 00)

REMOVAL

NOTE

Of the three hoses removed, left hose is the lube port hose, center hose is the return hose, and right hose is the pressure hose.

1. DISCONNECT THREE HOSES (1), (2), AND (3) FROM DRIVE ASSEMBLY (4).
2. REMOVE SIX SCREWS (5), WASHERS (6), AND DRIVE ASSEMBLY (4).
3. REMOVE THREE ELBOWS (7), (8), AND (9) AND PACKING (10), (11), AND (12) FROM DRIVE ASSEMBLY (4). DISCARD PACKING.

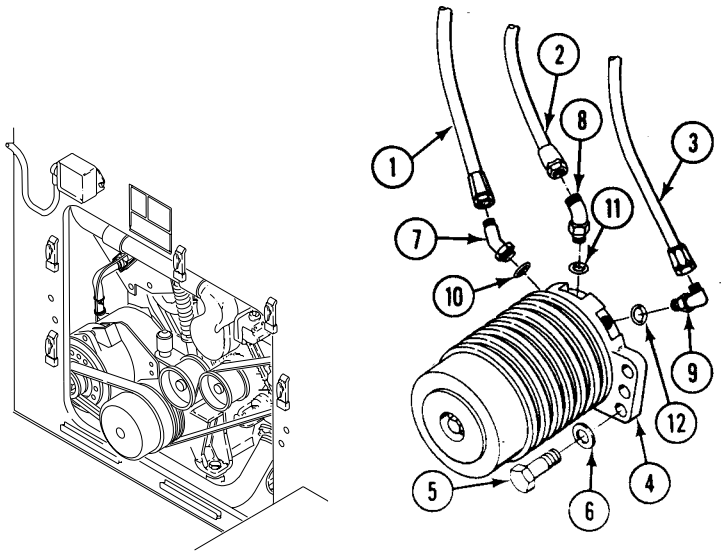

INSTALLATION

1. INSTALL THREE ELBOWS (7), (8), AND (9) AND NEW PACKINGS (10), (11), AND (12) ON DRIVE ASSEMBLY (4).
2. INSTALL DRIVE ASSEMBLY (4) ON ENGINE. SECURE WITH SIX SCREWS (5) AND WASHERS (6). TIGHTEN SCREWS TO 32-34 LB-FT (43-46 N·m) TORQUE.
3. CONNECT THREE HOSES (1), (2), AND (3) TO DRIVE ASSEMBLY (4).

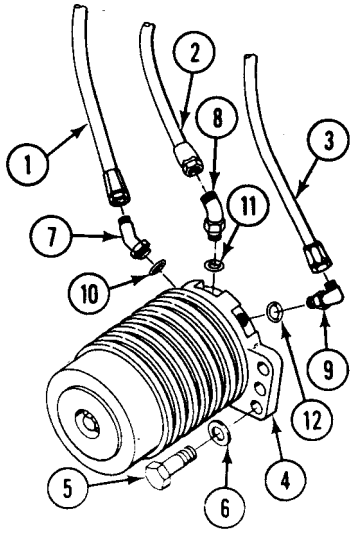

4. INSTALL FAN DRIVE BELT (WP 0148 00).
5. ADJUST FAN DRIVE BELT (WP 0147 00).
6. INSTALL GENERATOR DRIVE BELT (WP 0173 00).
7. ADJUST GENERATOR DRIVE BELT (WP 0300 00).
8. INSTALL POWER PLANT REAR ACCESS PANELS (WP 0309 00)
9. INSTALL DRIVER'S POWER PLANT ACCESS PANEL (WP 0312 00)

END OF TASK

CHAPTER 12

UNIT MAINTENANCE INSTRUCTIONS FOR WIRING HARNESSES

WORK PACKAGE INDEX

Title	Sequence No.
REMOVE/REPLACE WIRING HARNESS 1W13 (CIRCUIT BREAKER TO FAN SWITCH)	0179 00
REMOVE/REPLACE WIRING HARNESS 1W19 (DRIVER'S FAN TO INSTRUMENT PANEL)	0180 00
REMOVE/REPLACE WIRING HARNESS 1W3, TURRET POWER	0181 00
REMOVE/REPLACE CABLE ASSEMBLY 1W2, SPECIAL PURPOSE	0182 00
REMOVE/REPLACE WIRING HARNESS 1W1, DRIVERS COMMUNICATION BOX	0183 00
REPLACE WARNING PANEL WIRING HARNESS	0184 00
REPLACE RIGHT HEADLIGHT VEHICLE WIRING HARNESS	0185 00
REMOVE/REPLACE WIRING HARNESS 1W5 OR 1W6, HEADLIGHT EXTENSION	0186 00
REPLACE REAR MAIN WIRING HARNESS 1W4	0187 00
REPLACE TRANSMISSION CONTROLLER WIRING HARNESS	0188 00
REPAIR WIRING HARNESS	0189 00
REPLACE TRANSMISSION WIRING HARNESS	0190 00
REPLACE ENGINE WIRING HARNESS	0191 00

REMOVE/REPLACE WIRING HARNESS 1W13 (CIRCUIT BREAKER TO FAN SWITCH) 0179 00

THIS WORK PACKAGE COVERS:

Removal (page 0179 00-1).
Installation (page 0179 00-1).

INITIAL SETUP:

Maintenance Level

Unit

Tools and Special Tools

General mechanic's tool kit (WP 0397 00, Item 64)

Personnel Required

Unit mechanic 63T10

References

TM 9-2350-366-10-1

Equipment Condition

Engine stopped (TM 9-2350-366-10-1)
Vehicle blocked (TM 9-2350-366-10-1)
Vehicle master power off (TM 9-2350-366-10-1)
Battery ground strap disconnected (WP 0237 00)

REMOVAL

1. REMOVE CONNECTOR 59A (1) AT WIRING HARNESS 1W13 (2) FROM FAN SWITCH CIRCUIT BREAKER (3).
2. REMOVE CONNECTOR 59A (4) AT WIRING HARNESS 1W13 (2) FROM FAN SWITCH (5).

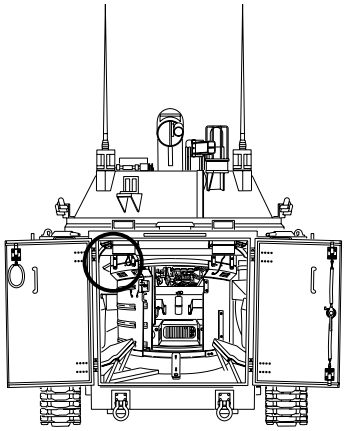

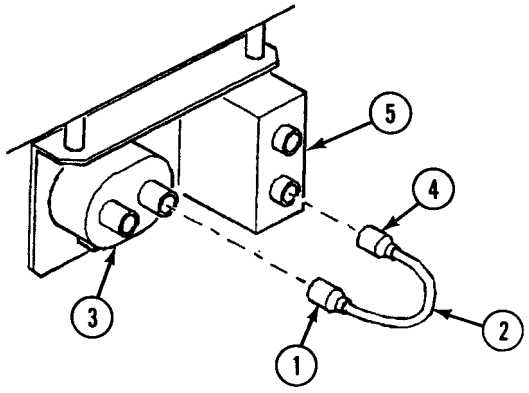

INSTALLATION

1. INSTALL CONNECTOR 59A (4) AT WIRING HARNESS 1W13 (2) TO FAN SWITCH (5).

REMOVE/REPLACE WIRING HARNESS 1W13 (CIRCUIT BREAKER TO FAN SWITCH) — Continued **0179 00**

2. INSTALL CONNECTOR 59A (1) AT WIRING HARNESS 1W13 (2) TO FAN SWITCH CIRCUIT BREAKER (3).

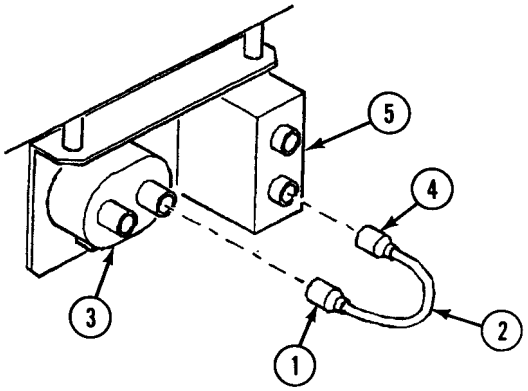

END OF TASK

REMOVE/REPLACE WIRING HARNESS 1W19 (DRIVER'S FAN TO INSTRUMENT PANEL) 0180 00

THIS WORK PACKAGE COVERS:

Removal (page 0180 00-1).
Installation (page 0180 00-1).

INITIAL SETUP:

Maintenance Level

Unit

Tools and Special Tools

General mechanic's tool kit (WP 0397 00, Item 64)

Personnel Required

Unit mechanic 63T10

References

TM 9-2350-366-10-1

Equipment Condition

Engine stopped (TM 9-2350-366-10-1)
Vehicle blocked (TM 9-2350-366-10-1)
Vehicle master power off (TM 9-2350-366-10-1)
Battery ground strap disconnected (WP 0237 00)

REMOVAL

1. REMOVE CONNECTOR 451A (1) OF WIRING HARNESS 1W19 (2) FROM DRIVER'S FAN (3).
2. REMOVE CONNECTOR 451A (4) OF WIRING HARNESS 1W19 (2) FROM FAN SWITCH ON REAR OF INSTRUMENT PANEL (5).

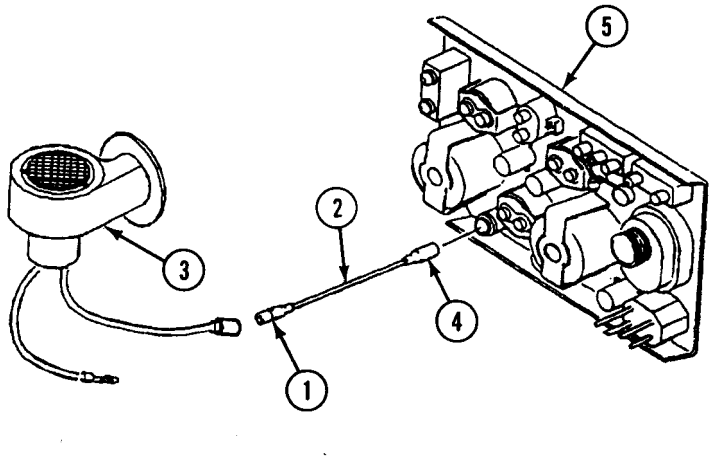

INSTALLATION

1. INSTALL CONNECTOR 451A (4) OF WIRING HARNESS 1W19 (2) IN FAN SWITCH AT REAR OF INSTRUMENT PANEL (5).

REMOVE/REPLACE WIRING HARNESS 1W19 (DRIVER'S FAN TO INSTRUMENT PANEL) — Continued **0180 00**

2. INSTALL CONNECTOR 451A (1) OF WIRING HARNESS 1W19 (2) ON DRIVER'S FAN (3).

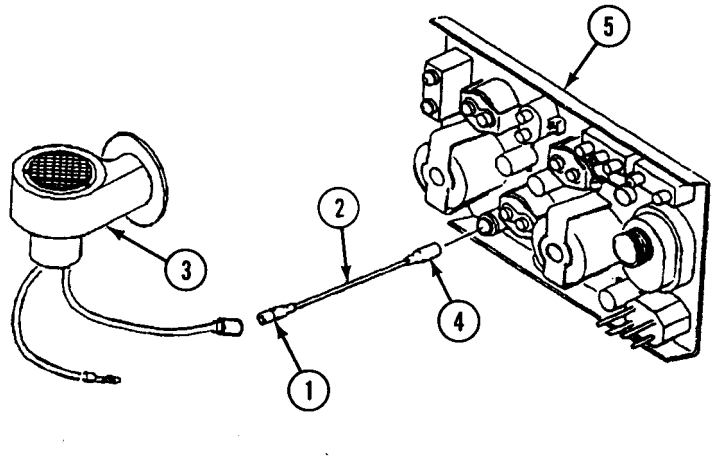

END OF TASK

REMOVE/REPLACE WIRING HARNESS 1W3, TURRET POWER 0181 00

THIS WORK PACKAGE COVERS:

Removal (page 0181 00-1).
Installation (page 0181 00-5).

INITIAL SETUP:

Maintenance Level

Unit

Personnel Required

Unit mechanic 63T10

Tools and Special Tools

General mechanic's tool kit (WP 0397 00, Item 64)

References

TM 9-2350-366-10-1

Materials/Parts

Harness
Locknuts
Lockwasher
Grommet
Clamps

Equipment Condition

Engine stopped (TM 9-2350-366-10-1)
Vehicle blocked (TM 9-2350-366-10-1)
Vehicle master power off (TM 9-2350-366-10-1)
Battery ground strap disconnected (WP 0237 00)

REMOVAL

1. REMOVE FOUR SCREWS (2) AND FOUR FLAT WASHERS (3) SECURING PLATE (1) TO TURRET FLOOR (4).

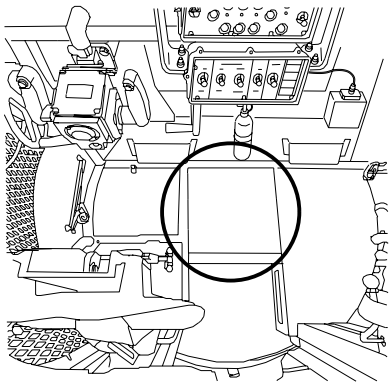

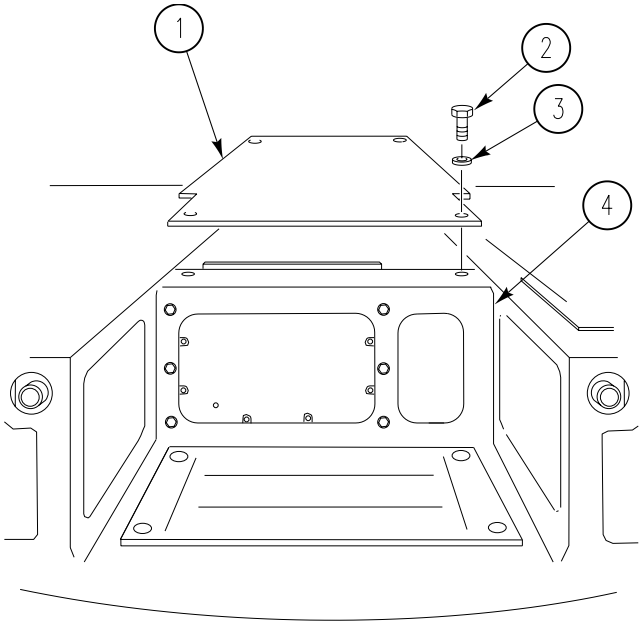

NOTE

P1 connector (3) is threaded.

2. DISCONNECT P1 CONNECTOR (3) FROM 2A7J2 (2) ON ENCODER AND SLIP RING ASSEMBLY (1).

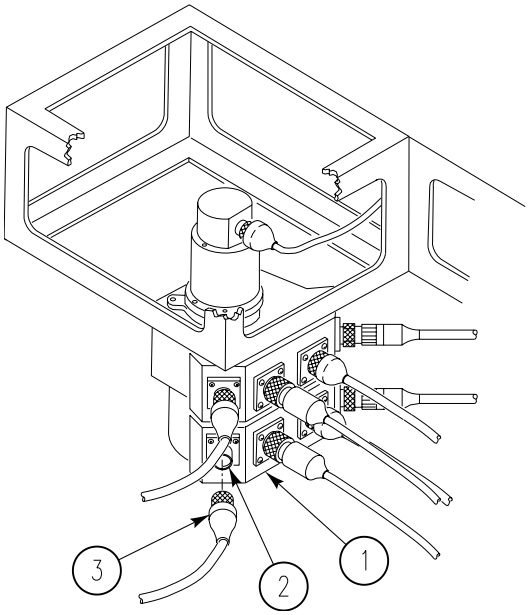

3. REMOVE 3 SCREWS (4) THREE LOCKWASHERS (3), AND THREE CLAMPS (5) SECURING HARNESS (1) TO HULL (2) OF VEHICLE. DISCARD LOCKWASHERS

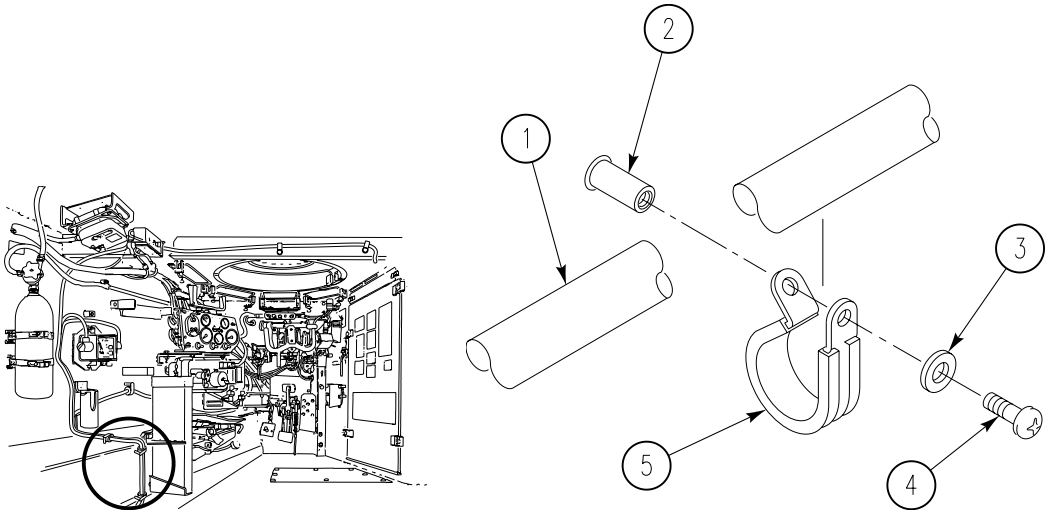

4. REMOVE EIGHT LOCKNUTS (3) EIGHT WASHERS (5) AND EIGHT BOLTS (6) SECURING MASTER SWITCH PANEL (4) TO DISTRIBUTION BOX (2). DISCARD LOCKNUTS.

5. REMOVE SCREW (8), AND LOCKWASHER (9), SECURING E1 (7), TO BUS (1). DISCARD LOCKWASHER.

6. REMOVE E1 (7) AND GROMMET (10) FROM DISTRIBUTION BOX (2). DISCARD GROMMET.

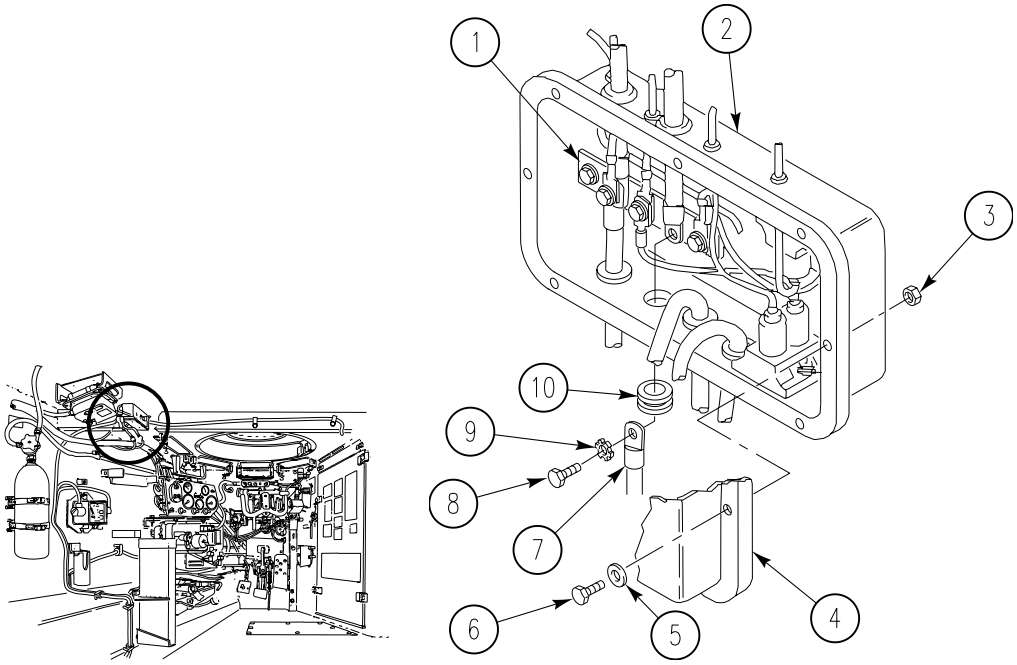

7. REMOVE SCREW (4), LOCKWASHER (3), AND CLAMP (5) SECURING E1 LEAD (1) TO VEHICLE (2). DISCARD LOCKWASHER.

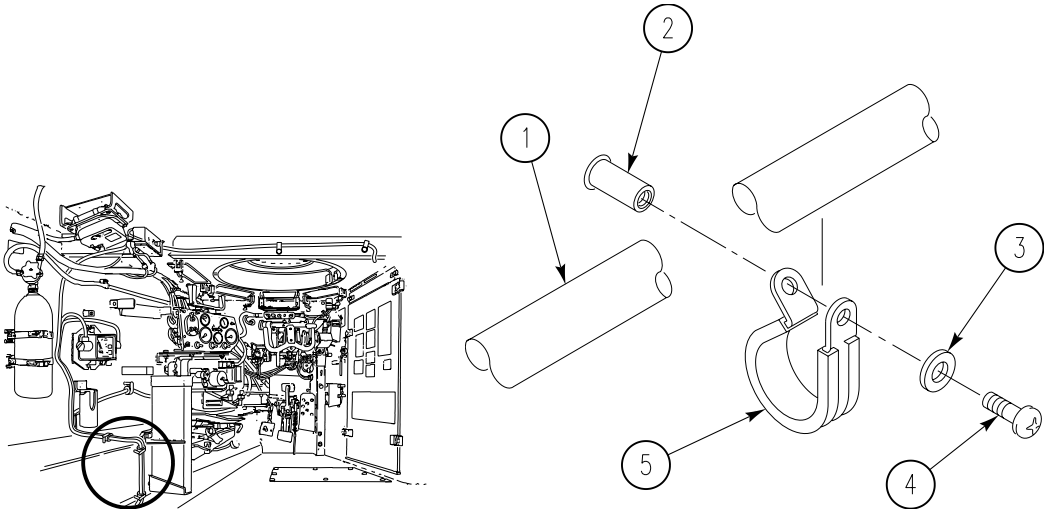

8. REMOVE BOLT (6), TWO FLAT WASHERS (5) AND (2), AND LOCKNUT (1) SECURING E2 (4) TO GROUND LUG (3). DISCARD LOCKNUT.

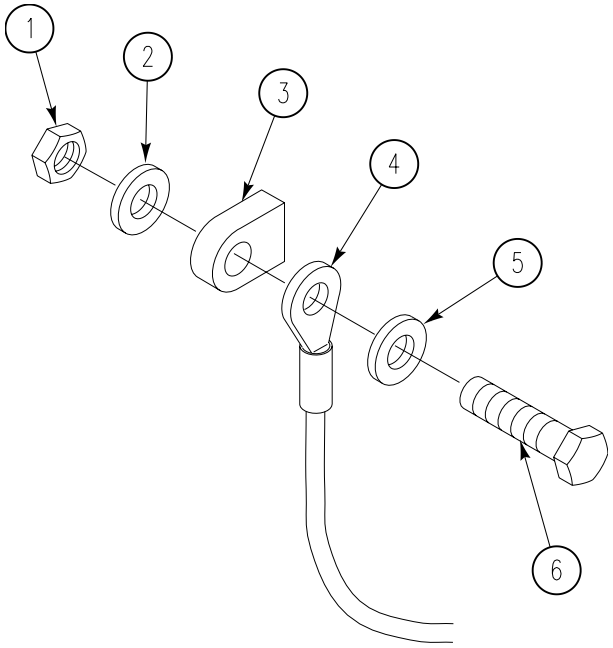

9. REMOVE HARNESS FROM VEHICLE.

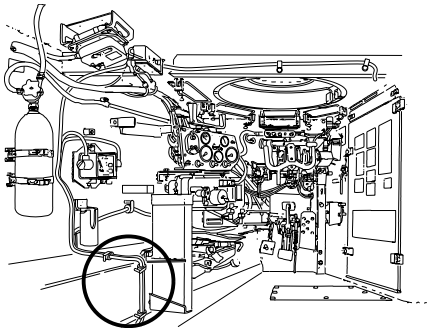

INSTALLATION

1. SECURE E2 (4) TO GROUND LUG (3) USING BOLT (6), TWO FLAT WASHERS (5) AND (2), AND NEW LOCKNUT (1).

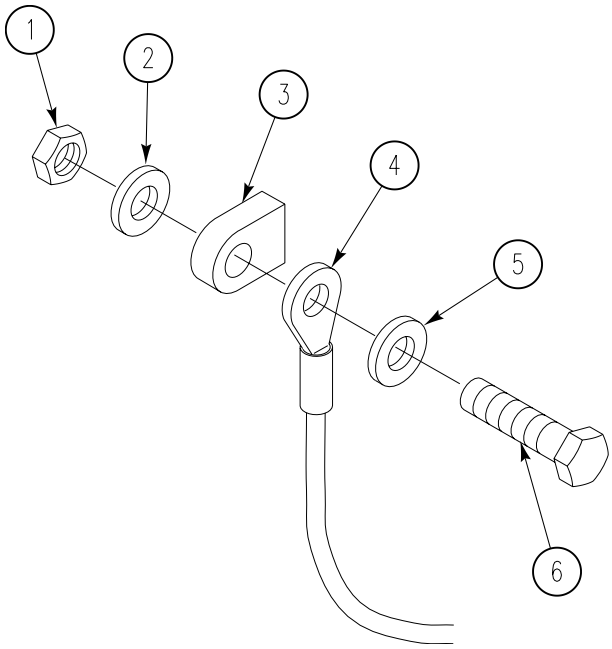

2. SECURE E1 LEAD (1) TO HULL (2) OF VEHICLE WITH SCREW (4), NEW LOCKWASHER (3) AND CLAMP (5).

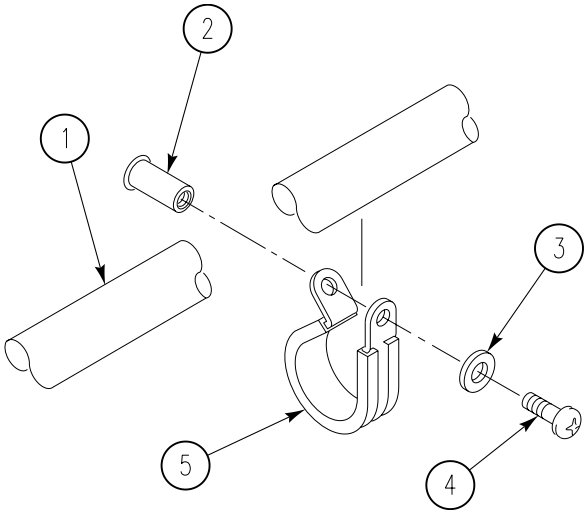

3. INSTALL E1 (7) AND NEW GROMMET (10) INTO DISTRIBUTION BOX.
4. SECURE E1 (24 VDC) (7) TO BUS (1) WITH SCREW (8) AND NEW LOCKWASHER (9).

5. INSTALL MASTER SWITCH PANEL (4) ON DISTRIBUTION BOX (2). SECURE WITH EIGHT BOLTS (6), EIGHT FLAT WASHERS (5), AND EIGHT NEW LOCKNUTS (3).

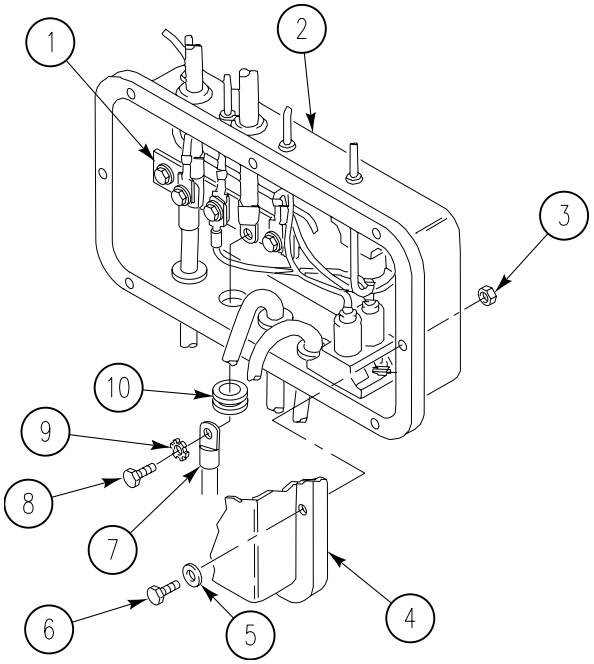

6. SECURE HARNESS (1) TO HULL (2) OF VEHICLE USING THREE SCREWS (4), THREE NEW LOCKWASHERS (3), AND THREE CLAMPS (5).

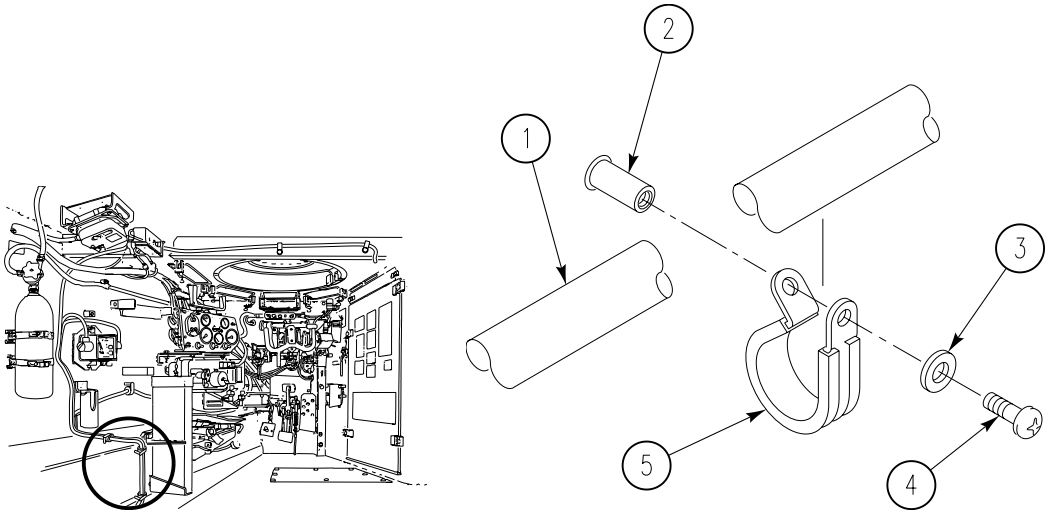

7. CONNECT P1 CONNECTOR (3) TO 2A7J2 (2) ON ENCODER AND SLIP RING ASSEMBLY (1).

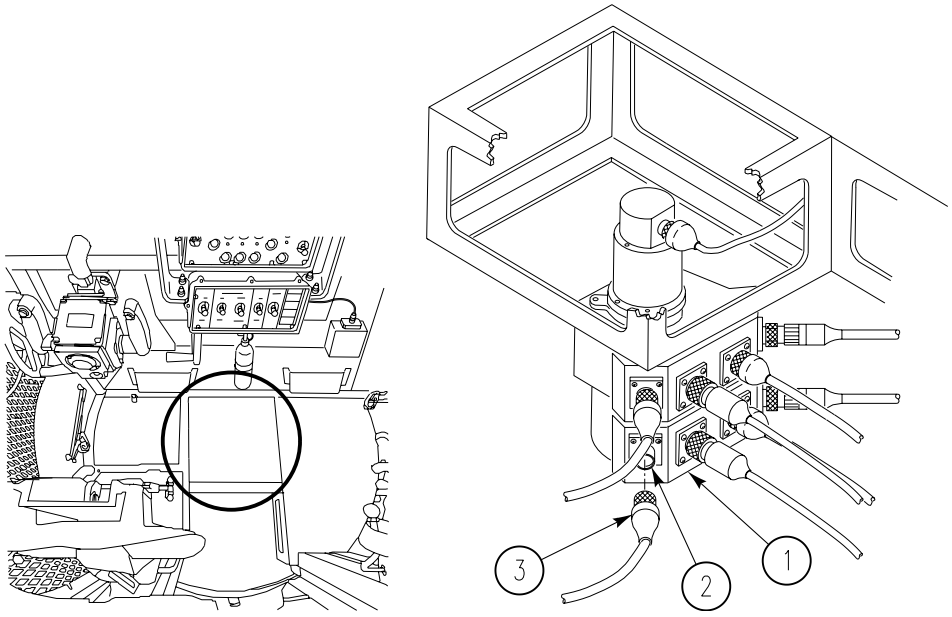

8. SECURE PLATE (1) TO TURRET FLOOR (4) USING FOUR SCREWS (2) AND FOUR FLAT WASHERS (3).

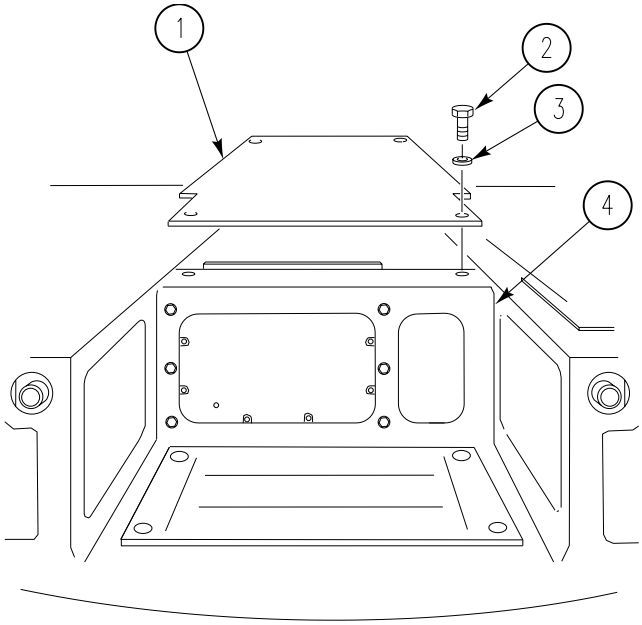

END OF TASK

REMOVE/REPLACE CABLE ASSEMBLY 1W2, SPECIAL PURPOSE 0182 00

THIS WORK PACKAGE COVERS:

Removal (page 0182 00-1).
Installation (page 0182 00-3).

INITIAL SETUP:

Maintenance Level
Unit

Tools and Special Tools
General mechanic's tool kit (WP 0397 00, Item 64)

Materials/Parts
Harness
Lockwasher
Clamps

Personnel Required
Unit mechanic 63T10

References
TM 9-2350-366-10-1

Equipment Condition
Engine stopped (TM 9-2350-366-10-1)
Vehicle blocked (TM 9-2350-366-10-1)
Vehicle master power off (TM 9-2350-366-10-1)
Battery ground strap disconnected (WP 0237 00)

REMOVAL

1. REMOVE FOUR SCREWS (2) AND FOUR FLAT WASHERS (3) SECURING PLATE (1) TO TURRET FLOOR (4).

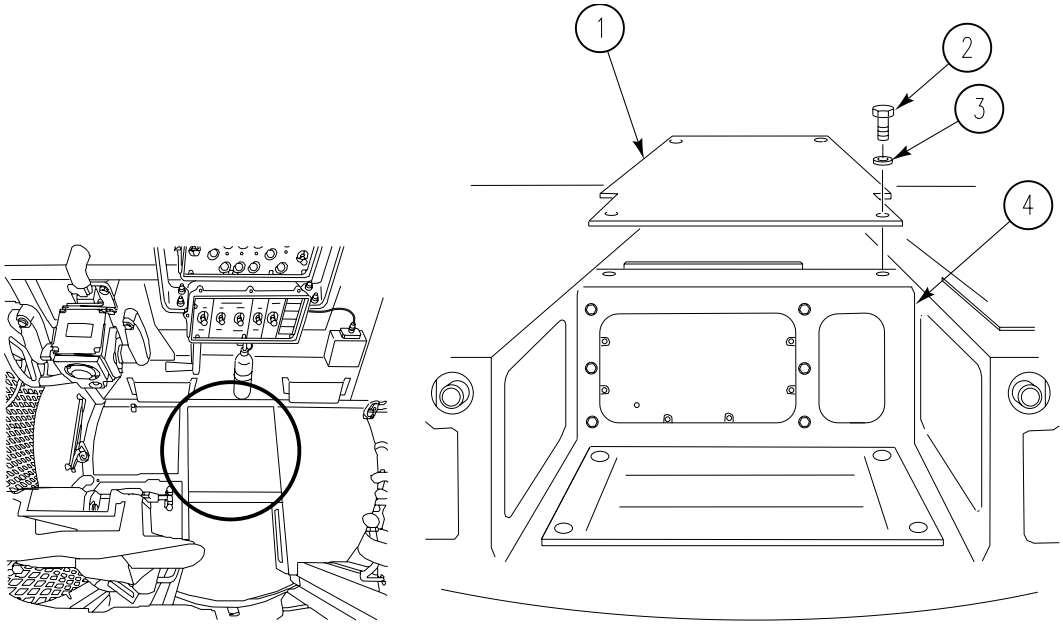

NOTE

P1 connector (1) is threaded.

2. DISCONNECT P1 CONNECTOR (1) FROM 2A7J2 (2) ON ENCODER AND SLIP RING ASSEMBLY (3).

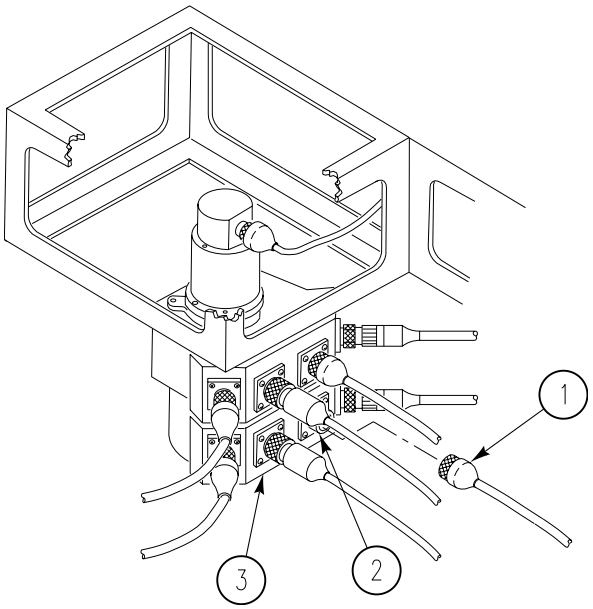

3. LOCATE AND DISCONNECT 1W2 LEADS AS FOLLOWS:
   P2 FROM CIRCUIT LEAD 1 OF 1W4 HARNESS
   P4 FROM CIRCUIT LEAD 38A OF 1W4 HARNESS
   P3 FROM P1 OF 1S9 SWITCH HARNESS
   P5 FROM P1 OF 1S6 SWITCH HARNESS

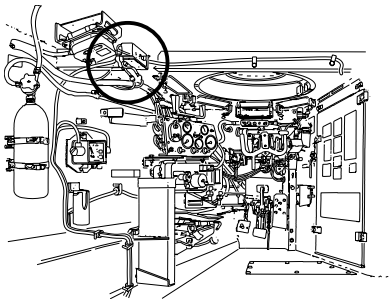

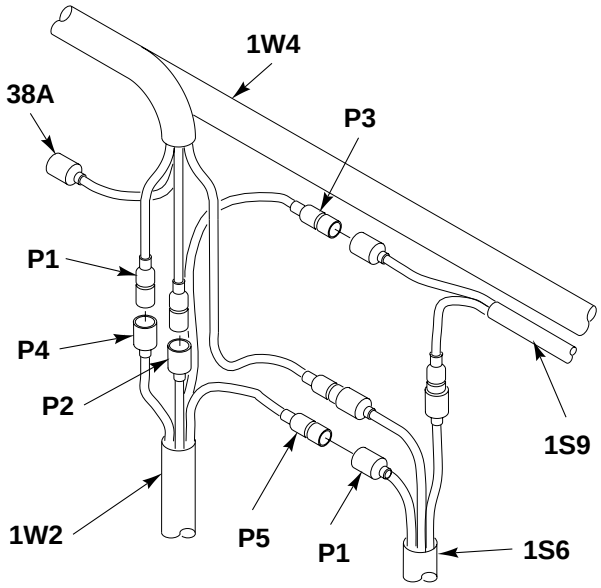

4. REMOVE THREE SCREWS (4), THREE LOCKWASHERS (3) AND THREE CLAMPS (5) SECURING HARNESS (1) TO VEHICLE. (2). DISCARD LOCKWASHERS.

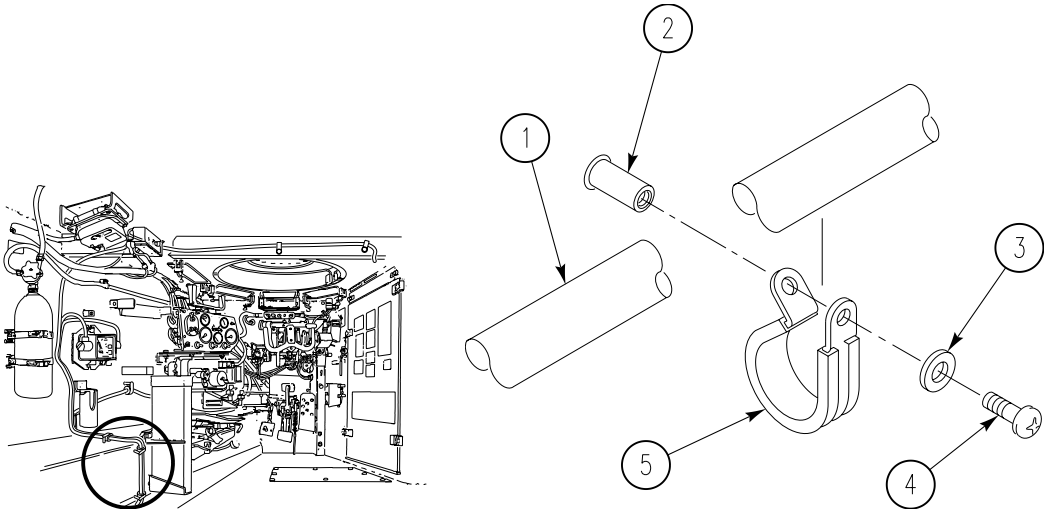

5. REMOVE HARNESS FROM VEHICLE.

INSTALLATION

1. LOCATE THE APPLICABLE HARNESSES AND CONNECT AS INDICTED BELOW:
   1S6 SWITCH HARNESS P1 TO P5 OF 1W2
   1S9 SWITCH HARNESS P1 TO P3 OF 1W2
   1W4 HARNESS CIRCUIT LEAD 38A TO P4 OF 1W2
   1W4 HARNESS CIRCUIT LEAD 1 TO P2 OF 1W2

.

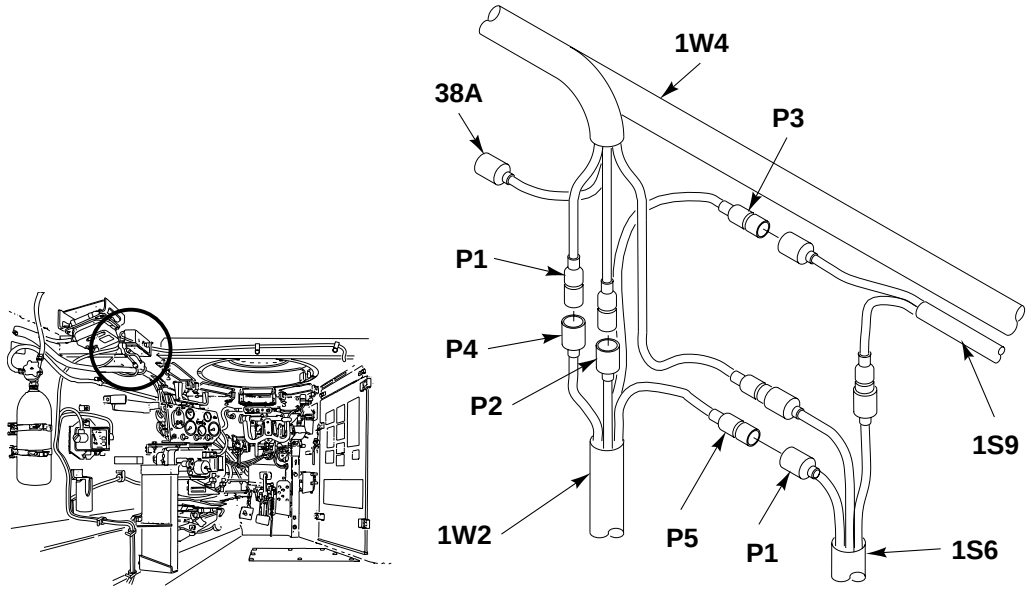

2. CONNECT P1 CONNECTOR (1) TO 2A7J4 (2) ON ENCODER AND SLIP RING ASSEMBLY (3).

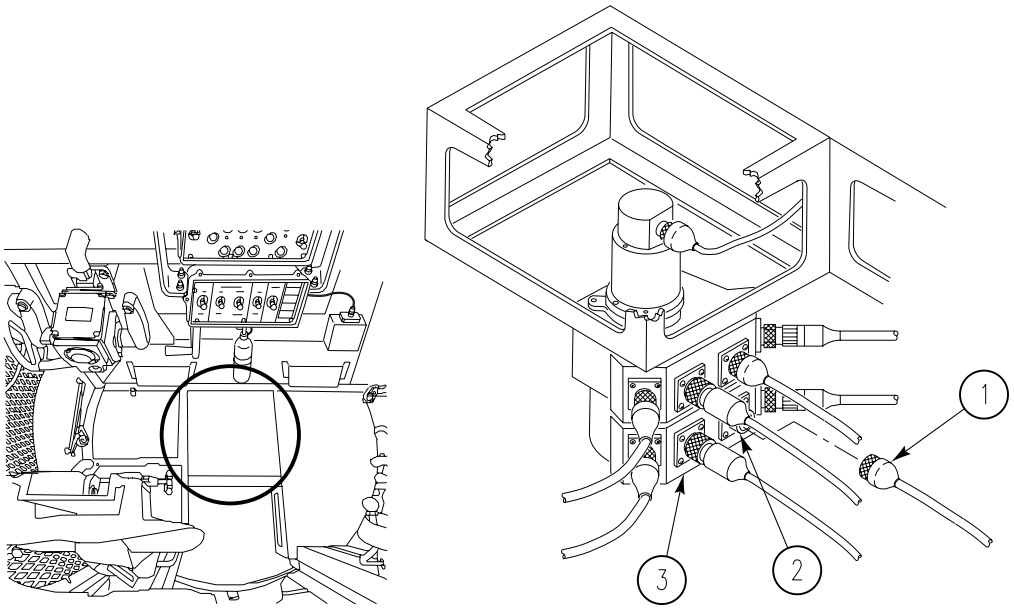

3. SECURE PLATE (1) TO TURRET FLOOR (4) USING FOUR SCREWS (2) AND FOUR FLAT WASHERS (3).

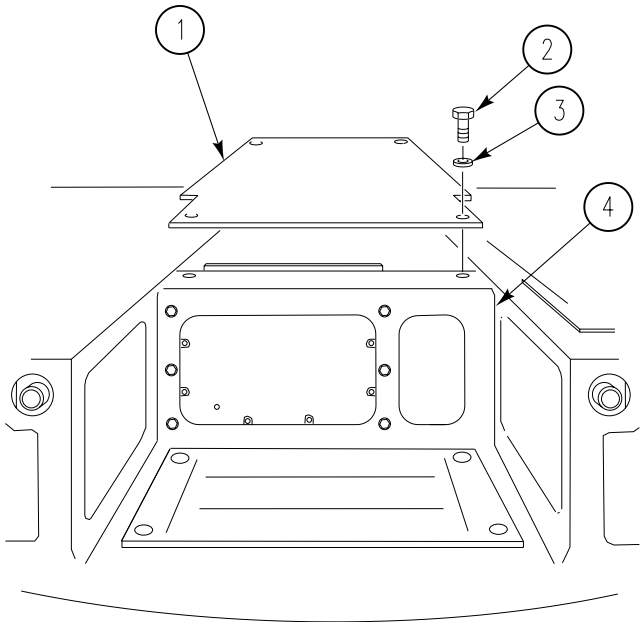

4. SECURE HARNESS (1) TO HULL OF VEHICLE (2) USING THREE SCREWS (4) THREE NEW LOCKWASHERS (3) AND THREE CLAMPS.

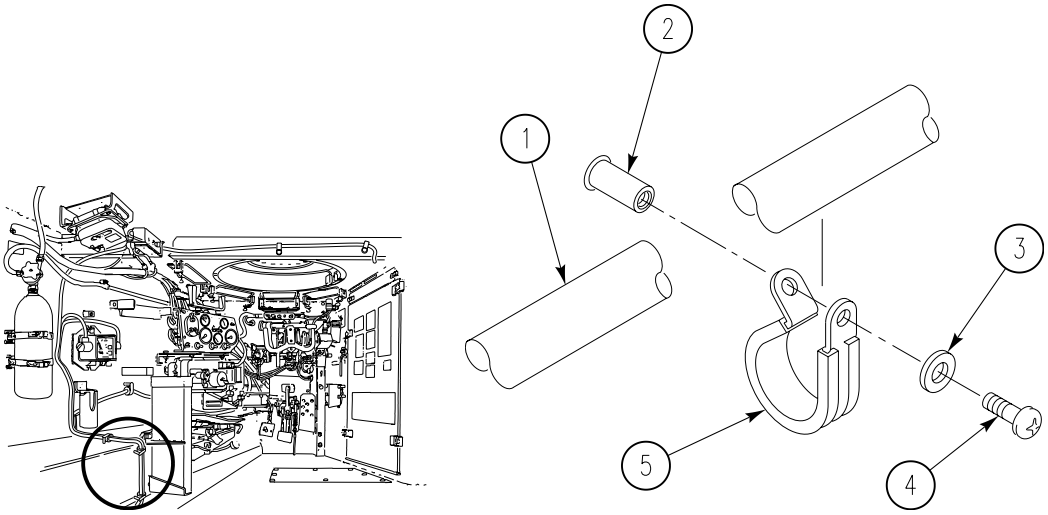

END OF TASK

REMOVE/REPLACE WIRING HARNESS 1W1, DRIVERS COMMUNICATION BOX 0183 00

THIS WORK PACKAGE COVERS:

Removal (page 0183 00-1).
Installation (page 0183 00-3).

INITIAL SETUP:

Maintenance Level
Unit

Tools and Special Tools
General mechanic's tool kit (WP 0397 00, Item 64)

Materials/Parts
Lockwasher (3)
Clamp

Personnel Required
Unit mechanic 63T10

References
TM 9-2350-366-10-1

Equipment Condition
Engine stopped (TM 9-2350-366-10-1)
Vehicle blocked (TM 9-2350-366-10-1)
Vehicle master power off (TM 9-2350-366-10-1)
Battery ground strap disconnected (WP 0237 00)

REMOVAL

1. REMOVE FOUR SCREWS (2) AND FLAT WASHERS (3) SECURING PLATE (1) TO TURRET FLOOR (4)

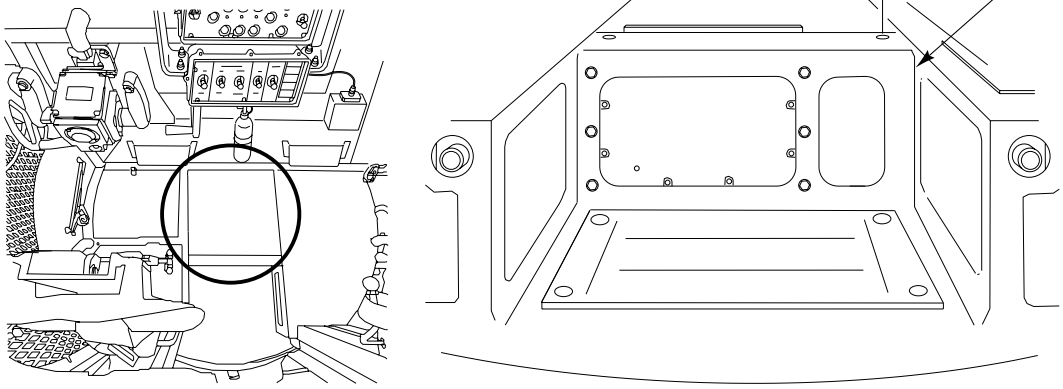

REMOVE/REPLACE WIRING HARNESS 1W1, DRIVERS COMMUNICATION BOX — Continued **0183 00**

NOTE

P1 connector (1) is threaded.

2. DISCONNECT P1 CONNECTOR (1) FROM 2A7J6 (2) OF ENCODER AND SLIP RING ASSEMBLY (3).

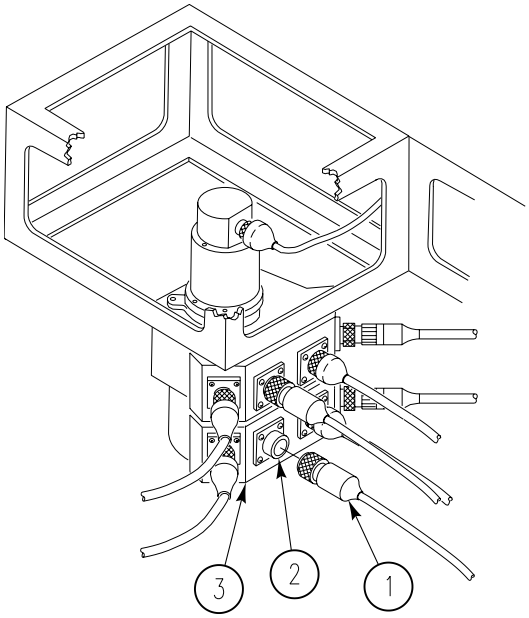

3. REMOVE THREE SCREWS (4) THREE LOCKWASHERS (3), AND THREE CLAMPS (5) SECURING HARNESS (1) TO VEHICLE (2).

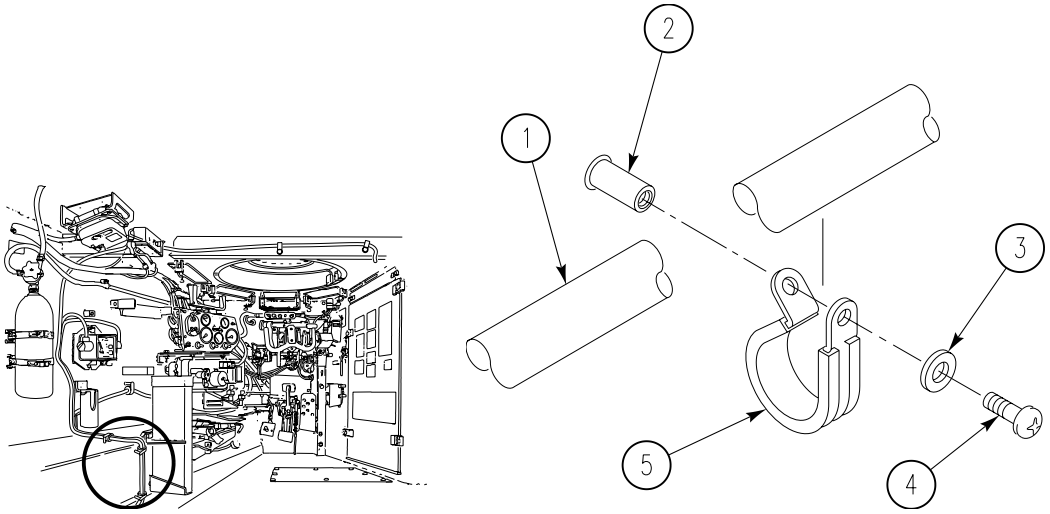

REMOVE/REPLACE WIRING HARNESS 1W1, DRIVERS COMMUNICATION BOX — Continued **0183 00**

4. DISCONNECT P2 CONNECTOR (1) FROM J801 ON COMMUNICATION BOX (2) IN DRIVERS COMPARTMENT.

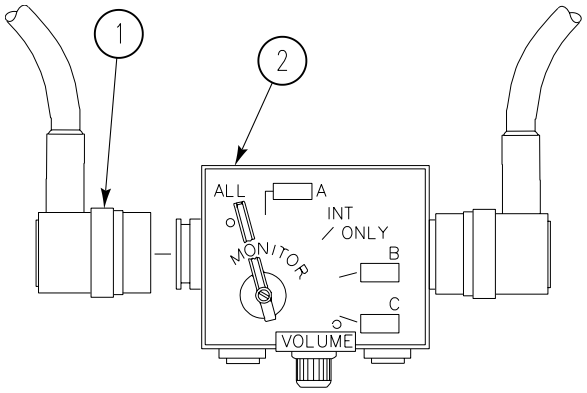

5. REMOVE HARNESS FROM CARRIER.

INSTALLATION

1. CONNECT P2 CONNECTOR (1) TO J801 ON COMMUNICATION BOX (2) IN DRIVER'S COMPARTMENT.

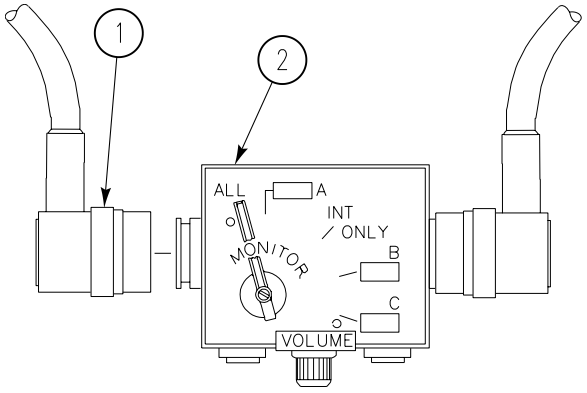

2. SECURE HARNESS (1) TO HULL OF VEHICLE (2) USING THREE SCREWS (4), THREE NEW LOCKWASHERS (3) AND THREE CLAMPS (5).

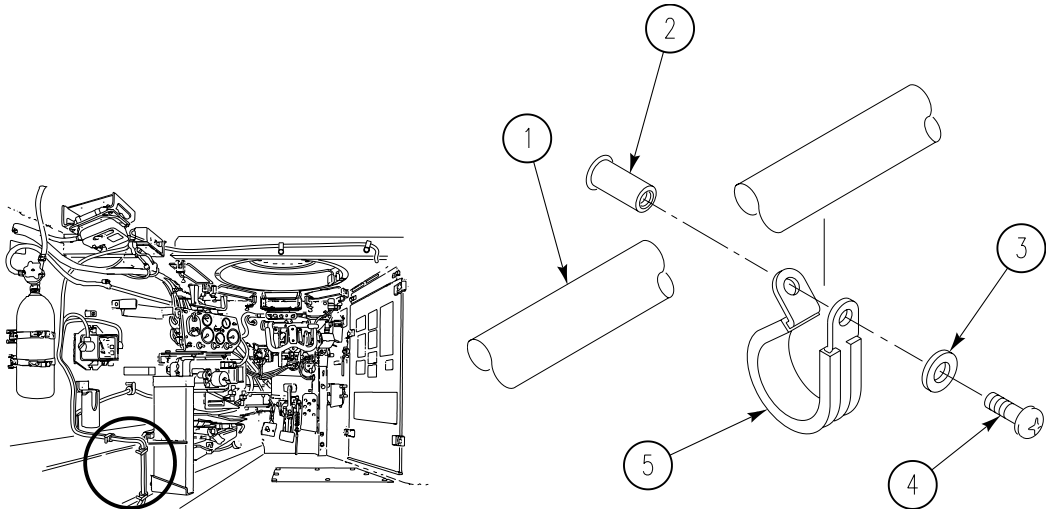

REMOVE/REPLACE WIRING HARNESS 1W1, DRIVERS COMMUNICATION BOX — Continued **0183 00**

3. CONNECT P1 CONNECTOR (1) TO 2A7J6 (2) ON ENCODER AND SLIP RING ASSEMBLY (3).

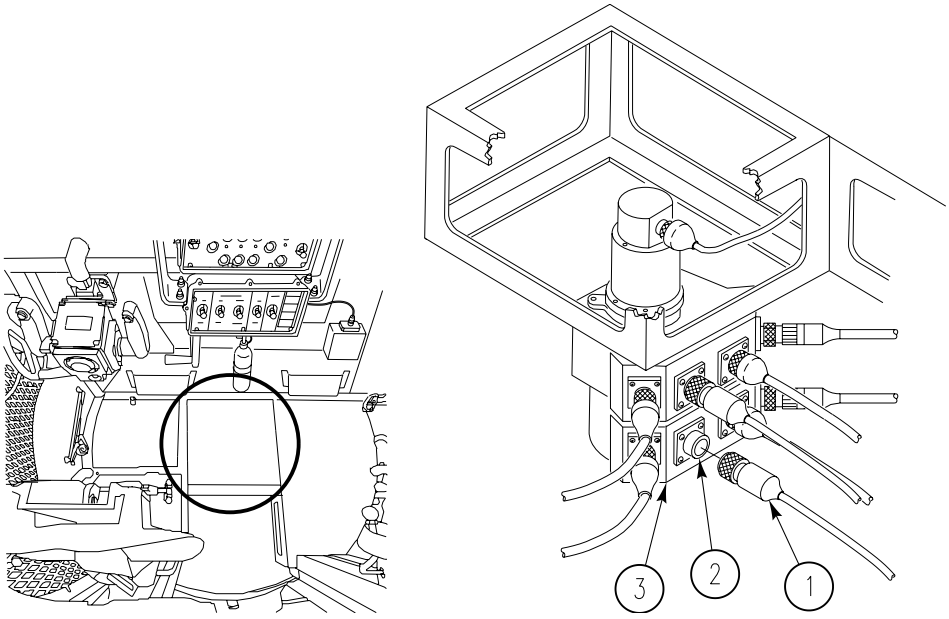

4. SECURE PLATE (1) TO TURRET FLOOR (4) USING FOUR SCREWS (2) AND FOUR FLAT WASHERS (3).

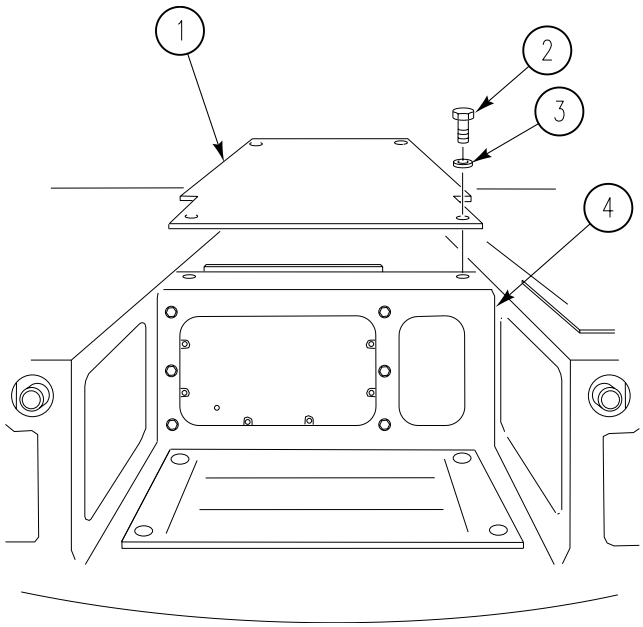

END OF TASK

REPLACE WARNING PANEL WIRING HARNESS 0184 00

THIS WORK PACKAGE COVERS:

Removal (page 0184 00-1).
Inspect and Repair (page 0184 00-2).
Installation (page 0184 00-3).

INITIAL SETUP:

Maintenance Level

Unit

Tools and Special Tools

General mechanic's tool kit (WP 0397 00, Item 64)

Materials/Parts

Lockwasher
Lockwasher

Personnel Required

Unit mechanic 63T10

References

TM 9-2350-366-10-1

Equipment Condition

Engine stopped TM 9-2350-366-10-1

Vehicle blocked TM 9-2350-366-10-1

Battery ground strap disconnected (WP 0237 00)

REMOVAL

1. DISCONNECT WIRING HARNESS LEAD (1) FROM STEERING LOCKED INDICATOR (2) ON WARNING LIGHT PANEL (3).

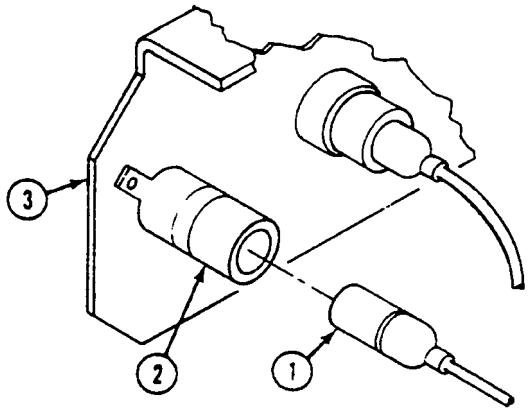

2. DISCONNECT WIRING HARNESS CONNECTOR (4) FROM CONNECTOR (5).

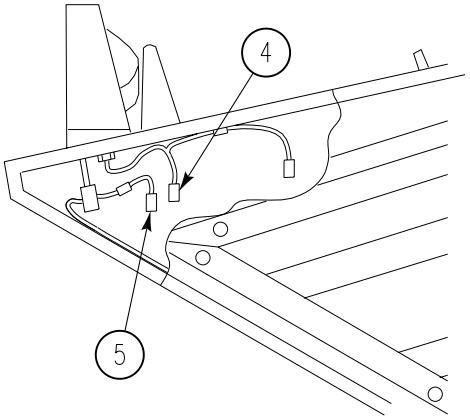

3. REMOVE SCREW (6), LOCKWASHER (7), AND GROUND LEAD (8) FROM PLATE (9). DISCARD LOCKWASHER.
4. REMOVE SCREW (10), LOCKWASHER (11), AND CLAMP (12) FROM UPPER NOSE PLATE OF FRONT HULL. DISCARD LOCKWASHER.

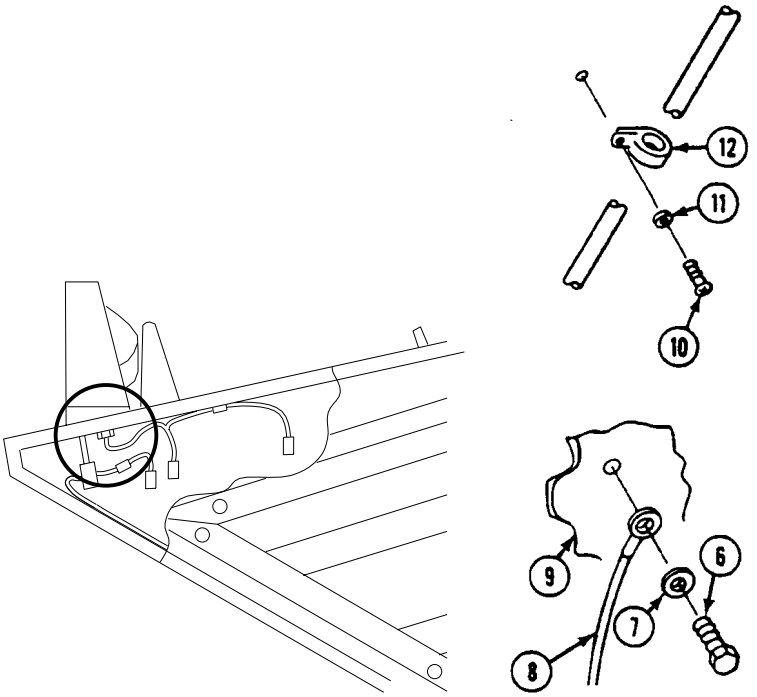

5. REMOVE FOUR SCREWS (1), CLIPS (2), AND WIRING HARNESS (3) FROM FOUR CRADLES (4).
6. DISCONNECT WIRING HARNESS (3) FROM CONNECTOR (5).

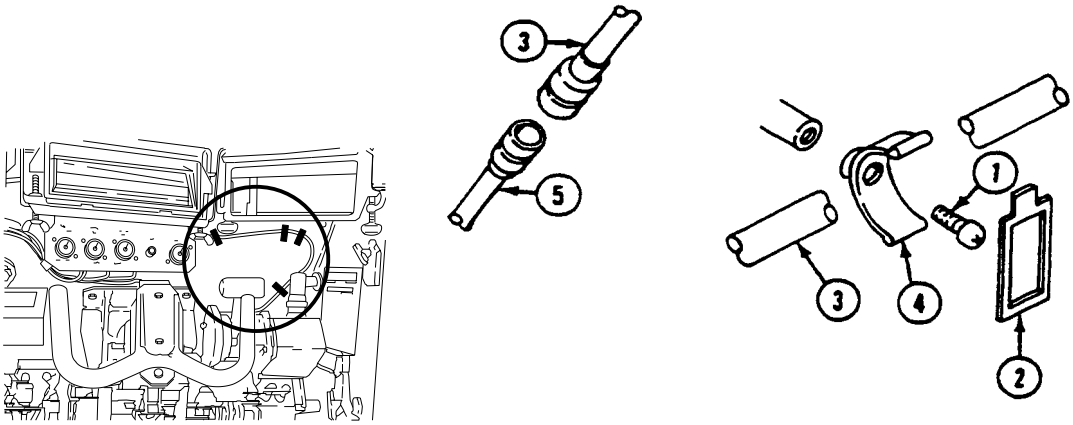

TEST AND INSPECTION

INSPECT AND REPAIR

1. CHECK CONNECTORS. REPAIR AS NEEDED (WP 0189 00).

INSTALLATION

1. CONNECT WIRING HARNESS (3) TO CONNECTOR (5).
2. INSTALL WIRING HARNESS (3) TO FOUR CRADLES (4) WITH FOUR CLIPS (2) AND SCREWS (1).

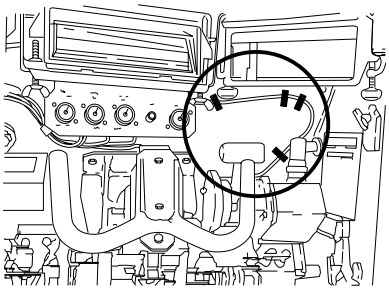

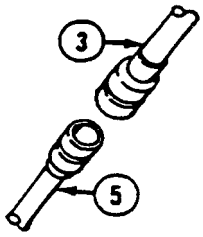

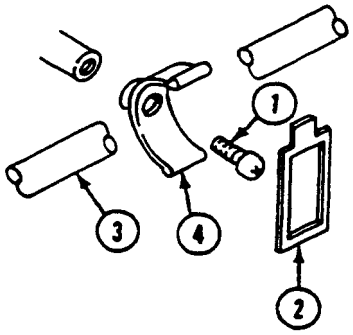

3. INSTALL WIRING HARNESS (6) ON UPPER NOSE PLATE OF FRONT HULL WITH SCREW (8), NEW LOCKWASHER (9) AND CLAMP (7).
4. INSTALL GROUND LEAD (10) ON PLATE (11) WITH SCREW (12) AND NEW LOCKWASHER (13).

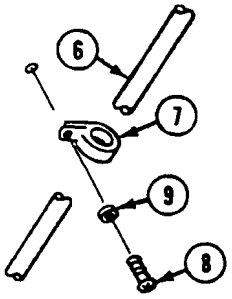

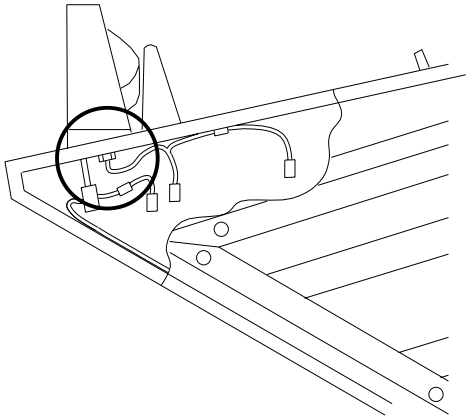

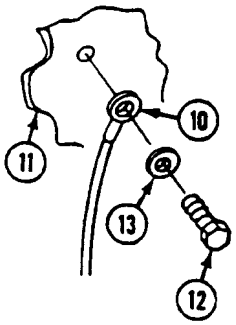

5. CONNECT WIRING HARNESS CONNECTOR (4) TO CONNECTOR (5).

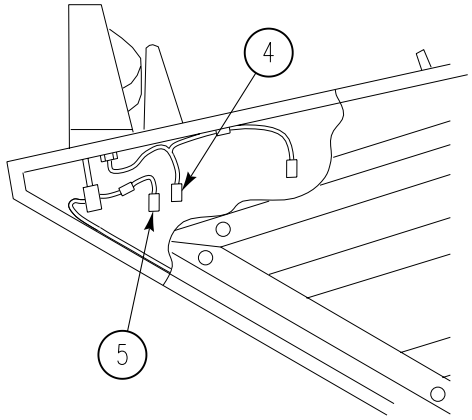

6. CONNECT WIRING HARNESS LEAD (1) TO STEERING LOCKED INDICATOR (2) ON WARNING LIGHT PANEL (3).

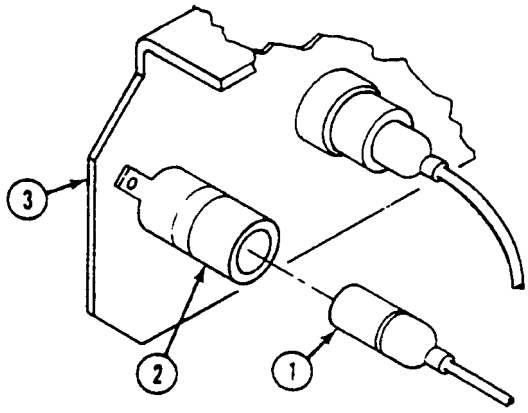

7. CONNECT BATTERY GROUND STRAP (WP 0237 00).
8. TURN MASTER SWITCH TO ON.
9. PLACE TRANSMISSION CONTROLLER IN SL POSITION. CHECK THAT STEERING LOCKED INDICATOR IS ON.
10. TURN MASTER SWITCH TO OFF.

END OF TASK

REPLACE RIGHT HEADLIGHT VEHICLE WIRING HARNESS 0185 00

THIS WORK PACKAGE COVERS:

Removal (page 0185 00-1).
Inspect and Repair (page 0185 00-3).
Installation (page 0185 00-3).

INITIAL SETUP:

Maintenance Level

Unit

Tools and Special Tools

General mechanic's tool kit (WP 0397 00, Item 64)
Multimeter (WP 0397 00, Item 30)

Materials/Parts

Insulation tape (WP 0397 00, Item 30)
Lockwasher (4)
Terminal (6)

Personnel Required

Unit mechanic 63T10

References

TM 9-2350-366-10-1

Equipment Condition

Engine stopped (TM 9-2350-366-10-1)
Vehicle blocked (TM 9-2350-366-10-1)
Front power plant access doors removed (TM 9-2350-366-10-1)
Engine access cover plate removed (TM 9-2350-366-10-1)
Power plant grille removed (WP 0335 00)
Battery ground strap disconnected (WP 0237 00)
Hull nose assembly removed (WP 0313 00)

REMOVAL

1. DISCONNECT RIGHT HEADLIGHT WIRING HARNESS (1) FROM FRONT MAIN WIRING HARNESS (2) AT DRIVER'S COMPARTMENT BULKHEAD.

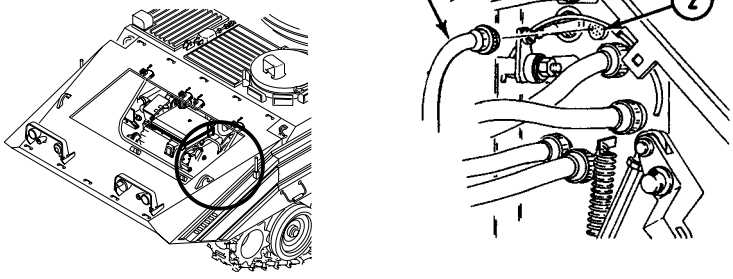

2. DISCONNECT SIX VEHICLE WIRING HARNESS LEADS 17, 18, 20, 25, 514, AND 515 (1) FROM SIX VISMOD WIRING HARNESS LEADS 17, 18, 20, 25, 514 AND 515.

3. REMOVE COUPLING NUT (7), NUT (5), LOCKWASHER (4), AND TWO FLAT WASHERS (3), (6) FROM BUSHING (2). (TWO PLACES.)

4. REMOVE NUT (5), LOCKWASHER (4), AND FLATWASHER (3) FROM HULL BUSHING (2). (TWO PLACES.)

5. REMOVE TWO HULL BUSHINGS (2) WITH WIRING HARNESS FROM VISMOD NOSE ASSEMBLY.

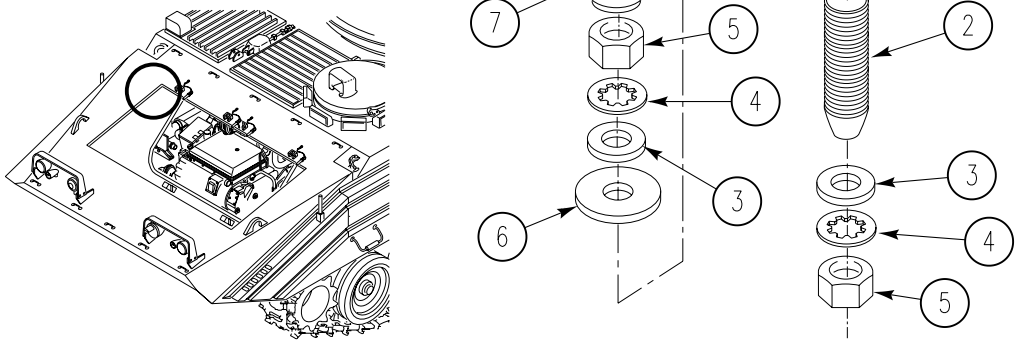

6. REMOVE THREE CRADLE CLIPS (11) AND HARNESS (12) FROM THREE CRADLES (13).

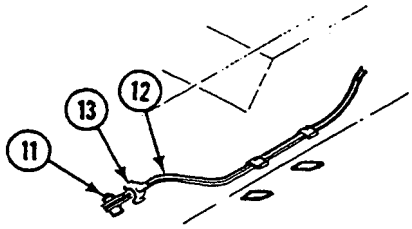

7. REMOVE SCREW (14), CLAMP (15), AND HARNESS (12) FROM WELDNUT (16).

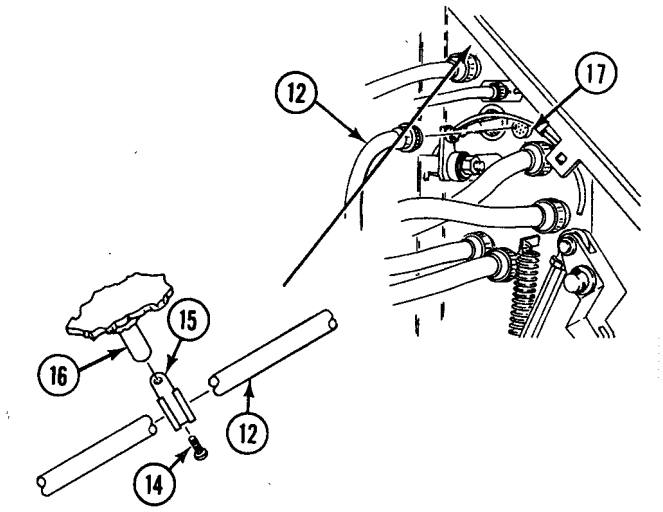

TEST AND INSPECTION

INSPECT AND REPAIR

1. CHECK LEADS FOR CONTINUITY. REPLACE BAD LEADS.
2. CHECK HARNESS FOR DAMAGE. REPAIR DAMAGED CONNECTORS OR TERMINALS (WP 0189 00).

INSTALLATION

NOTE

New harness assembly comes with hull bushing assemblies installed.

1. CONNECT RIGHT HEADLIGHT WIRING HARNESS (1) TO FRONT MAIN WIRING HARNESS (2) AT DRIVER'S COMPARTMENT BULKHEAD.

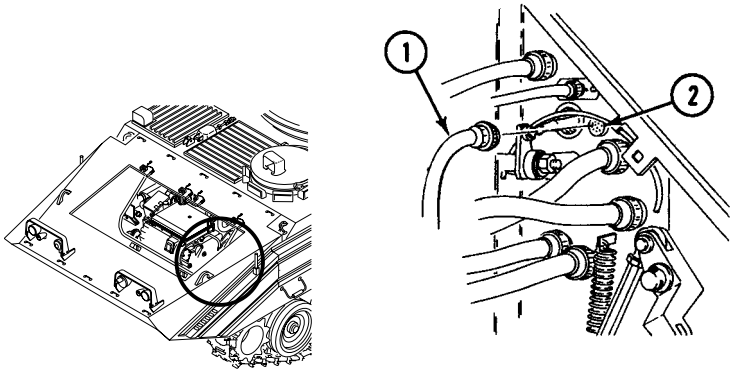

2. INSTALL CLAMP (15) ON HARNESS (12). SECURE CLAMP TO HULL WELDNUT (16) WITH SCREW (14).

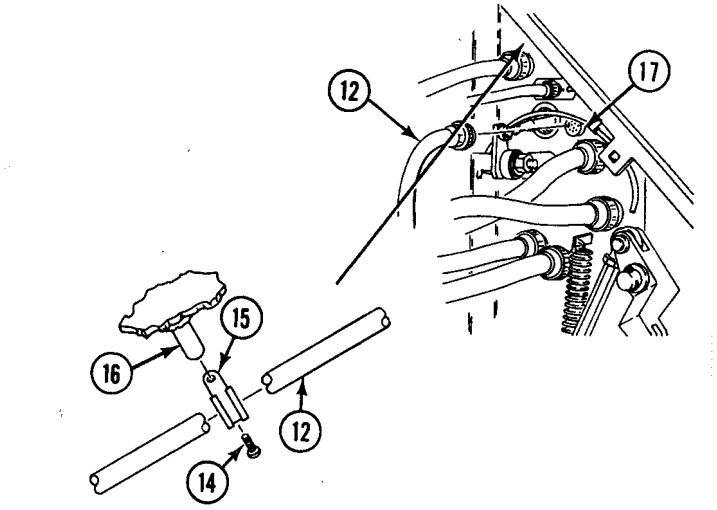

3. INSTALL HARNESS (12) ON THREE CRADLES (13). SECURE HARNESS WITH THREE CRADLE CLIPS (11).

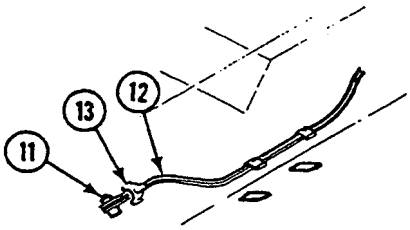

4. THREAD TWO BUSHINGS (2) WITH WIRING HARNESS INTO HULL. SECURE BUSHINGS WITH NUTS (5), NEW LOCKWASHERS (4), AND FLAT WASHERS (3). DO NOT TIGHTEN NUTS.
5. LOCATE SERVICE HEADLIGHT AND BLACKOUT MARKER LIGHT BUSHING (2) IN HULL. SLOWLY PUSH THREE VEHICLE WIRING HARNESS LEADS 17, 18, AND 20 (1) THROUGH HOLE. DO NOT DAMAGE LEADS.
6. LOCATE SECOND BUSHING IN HULL. SLOWLY PUSH THREE VEHICLE WIRING HARNESS LEADS 25, 514, AND 515 (1) THROUGH HOLE. DO NOT DAMAGE LEADS.
7. INSTALL TWO FLAT WASHERS (6), (3), NEW LOCK WASHER (4), NUT (5), AND COUPLING NUT (7) ON BUSHING (2). (TWO PLACES.)
8. CONNECT SIX VEHICLE WIRING HARNESS LEADS 17, 18, 20, 25, 514, AND 515 (1) TO SIX VISMOD WIRING HARNESS LEADS 17, 18, 20, 25, 514, AND 515.

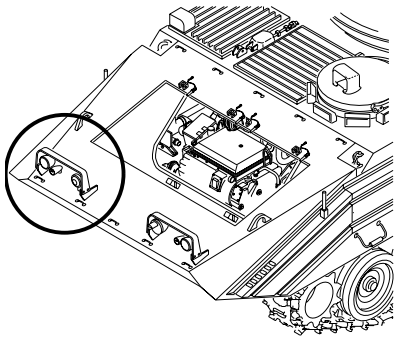

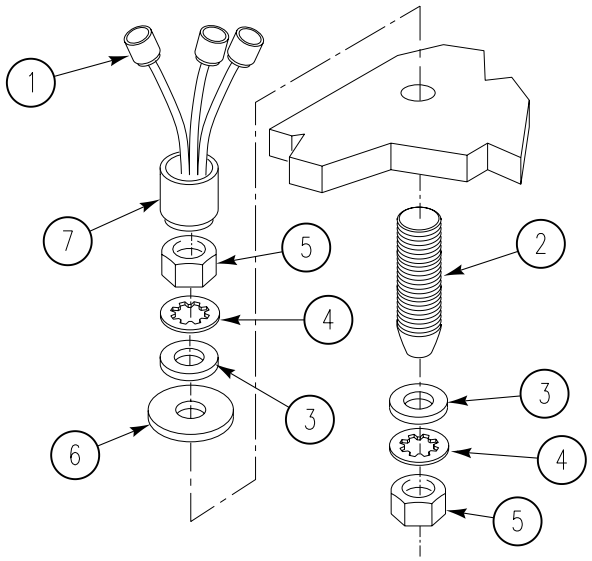

9. INSTALL POWER PLANT GRILLE (WP 0335 00).
10. CONNECT BATTERY GROUND STRAP (WP 0237 00).
11. INSTALL ENGINE ACCESS COVER PLATE. See TM 9-2350-366-10-1.
12. INSTALL FRONT POWER PLANT ACCESS DOORS. See TM 9-2350-366-10-1.
13. INSTALL HULL NOSE ASSEMBLY (WP 0313 00).

END OF TASK

REMOVE/REPLACE WIRING HARNESS 1W5 OR 1W6, HEADLIGHT EXTENSION 0186 00

THIS WORK PACKAGE COVERS:

Removal (page 0186 00-1).
Installation (page 0186 00-3).

INITIAL SETUP:

Maintenance Level
Unit

Tools and Special Tools
General Mechanic's Tool Kit (WP 0397 00, Item 64)

Materials/Parts
Tape
Lockwasher (2)
Lockwasher (2)
Clamp
Locknut
Locknut

Personnel Required
Unit Mechanic 63T10

References
TM 9-2350-366-10-1

Equipment Condition
Engine stopped (TM 9-2350-366-10-1)
Vehicle blocked (TM 9-2350-366-10-1)
Vehicle master power off (TM 9-2350-366-10-1)
Battery ground strap disconnected (WP 0237 00)
Front VISMOD access panels removed (TM 9-2350-366-10-1)
Engine access cover plate removed (TM 9-2350-366-10-1)

REMOVAL

NOTE

Remove and install steps apply to either 1W5 or 1W6 unless noted. Left side of vehicle is shown.

1. DISCONNECT CIRCUIT 20 LEAD (5) FROM B/O MARKER (2).
2. DISCONNECT CIRCUIT 17 LEAD (7) AND CIRCUIT 18 LEAD (6) FROM HEADLIGHT (1).
3. FOR LEFT HARNESS 1W5, DISCONNECT CIRCUIT 19 LEAD (4) FROM B/O DRIVE (3). FOR RIGHT HARNESS, 1W6, DISCONNECT LEAD 25 (4) FROM HORN (3).

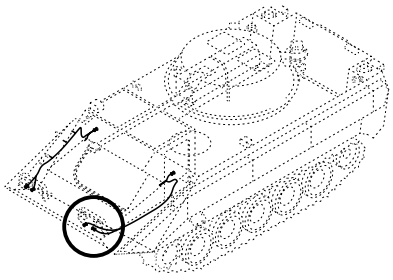

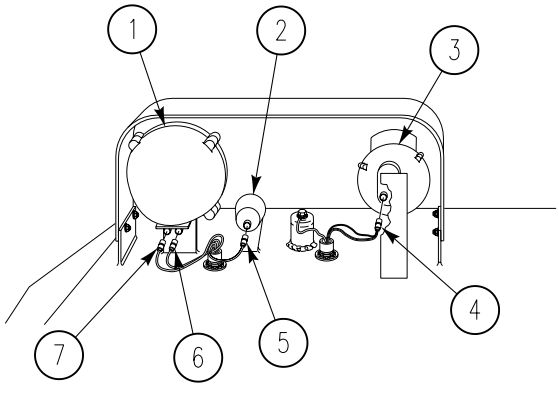

REMOVE/REPLACE WIRING HARNESS 1W5 OR 1W6, HEADLIGHT EXTENSION — Continued **0186 00**

4. REMOVE SCREW (1), LOCKWASHER(2), GROUND WIRE (3), LOCKWASHER (2), WASHER (6), AND LOCKNUT (5)FROM MOUNT (4). DISCARD LOCKWASHERS AND LOCKNUT.

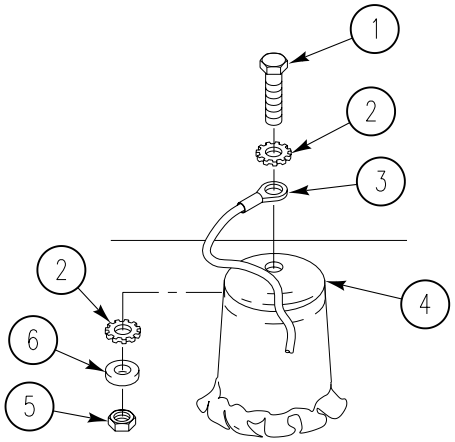

5. REMOVE COUPLING NUT (7), NUT (5), LOCKWASHER (4), AND TWO FLAT WASHERS (3),(6) FROM BUSHING (2). (TWO PLACES RIGHT SIDE, TWO PLACES LEFT SIDE.)

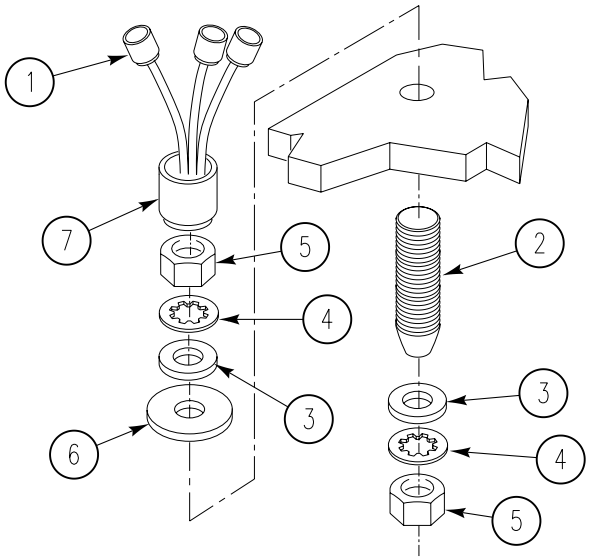

6. REMOVE NUT (5), LOCKWASHER (4), AND FLAT WASHER (3) FROM TWO HULL BUSHINGS (2).
7. REMOVE TWO HULL BUSHINGS (2) WITH WIRING HARNESS (1) FROM VISMOD NOSE ASSEMBLY.

REMOVE/REPLACE WIRING HARNESS 1W5 OR 1W6, HEADLIGHT EXTENSION — Continued **0186 00**

8. REMOVE THREE SCREWS (4) WASHERS (3), CLAMPS (5), AND HARNESS (1) FROM WELDNUTS (2) INSIDE VISMOD NOSE ASSEMBLY.

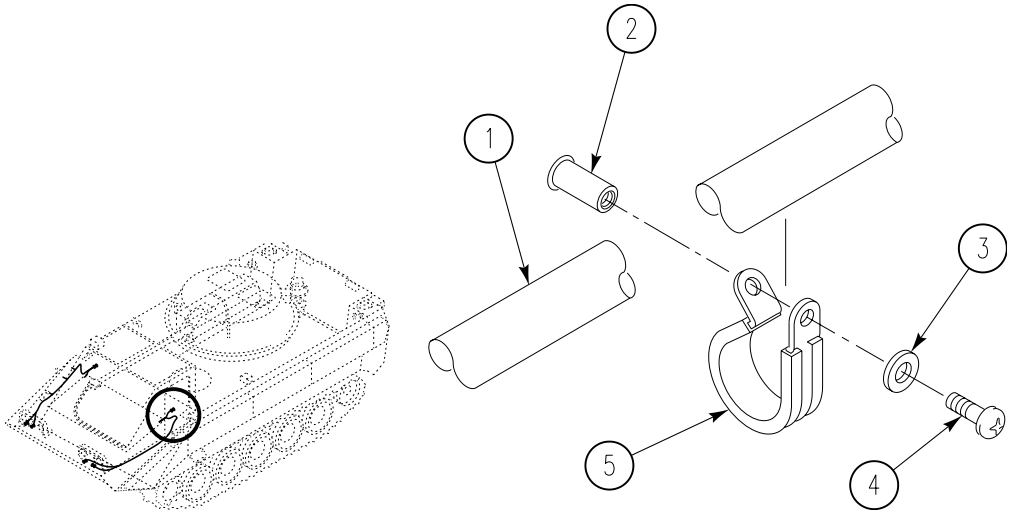

NOTE

For ease in installation, ensure lead markers on vehicle wiring harness are legible.

9. DISCONNECT HEADLIGHT EXTENSION HARNESS FROM VEHICLE HARNESS (2).

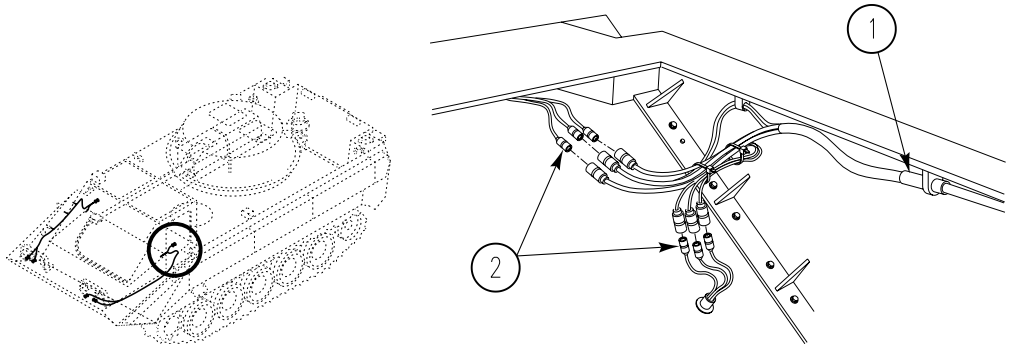

10. REMOVE HEADLIGHT EXTENSION HARNESS (1) FROM VEHICLE.

INSTALLATION

1. POSITION HEADLIGHT EXTENSION HARNESS (1) IN VEHICLE.

REMOVE/REPLACE WIRING HARNESS 1W5 OR 1W6, HEADLIGHT EXTENSION — Continued **0186 00**

2. PLUG SIX LEADS 17, 18, 19/25, 20, OF HEADLIGHT EXTENSION HARNESS (1) INTO CORRESPONDING SIX CONNECTORS OF VEHICLE WIRING HARNESS (2).

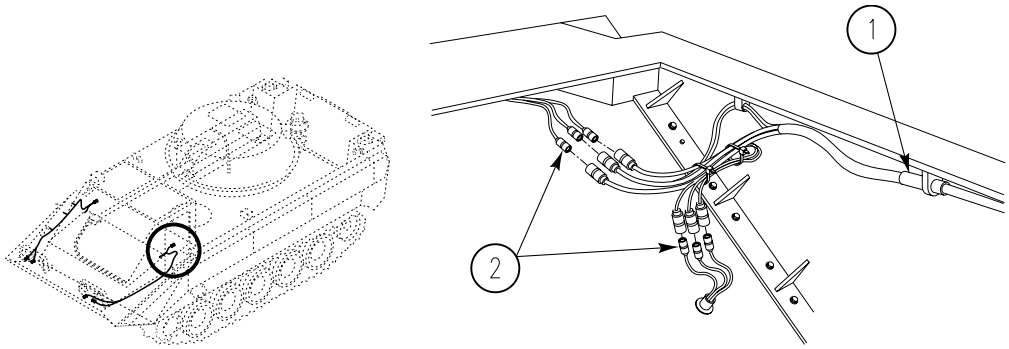

3. INSTALL THREE SCREWS (4), NEW LOCKWASHERS (3), CLAMPS (5), AND HEADLIGHT EXTENSION HARNESS (1) ON WELDNUTS (2) INSIDE VISMOD NOSE ASSEMBLY.

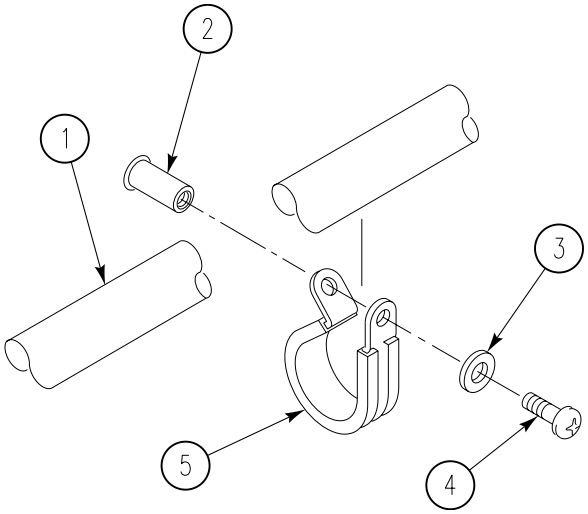

REMOVE/REPLACE WIRING HARNESS 1W5 OR 1W6, HEADLIGHT EXTENSION — Continued **0186 00**

NOTE

New harness assembly comes with hull bushing assemblies installed.

4. THREAD BUSHINGS (2) WITH HARNESS INTO HULL. SECURE WITH NUT (5), NEW LOCKWASHER (4) FLAT WASHER (3) AND TWO FLAT WASHERS (6). DO NOT TIGHTEN NUT. (TWO PLACES RIGHT, TWO PLACES LEFT.)

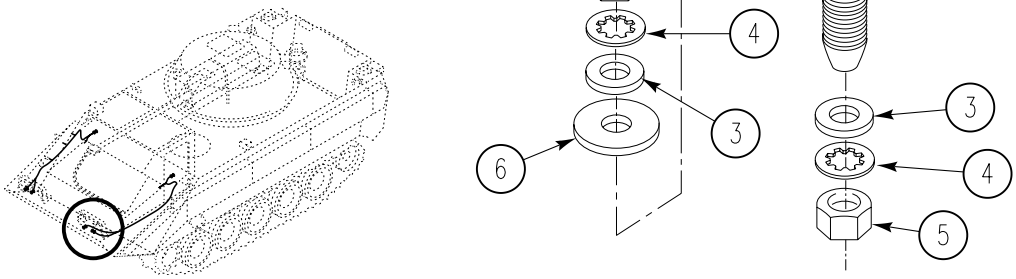

5. SLOWLY SLIDE HEADLIGHT EXTENSION LEADS 17, 18, AND 20 (1) IN BUSHING (7). DO NOT DAMAGE WIRING LEADS.
6. LOCATE SECOND BUSHING IN HULL. SLOWLY SIDE CONNECTOR LEADS 19/25, 514, AND 515 (1) THROUGH HOLE. DO NOT DAMAGE WIRING LEADS.
7. INSTALL TWO WASHERS (6)(3), NEW LOCKWASHER (4), NUT (5), AND COUPLING NUT (7) ON BUSHING (2).
8. FOR 1W5, LEFT HARNESS, CONNECT CIRCUIT 19 (4) LEAD TO B/O DRIVE (3). FOR 1W6, RIGHT HARNESS, CONNECT LEAD (5) TO HORN (2).

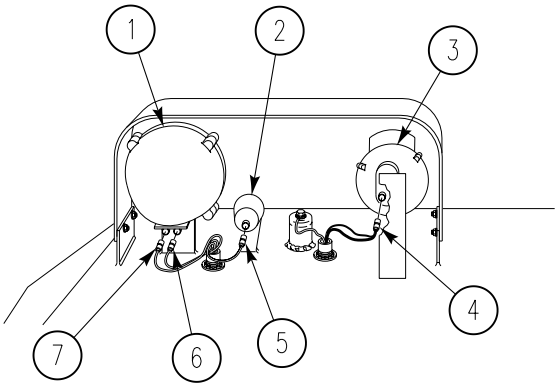

REMOVE/REPLACE WIRING HARNESS 1W5 OR 1W6, HEADLIGHT EXTENSION — Continued **0186 00**

9. BEND AND TAPE LEADS 17 (17) AND 18 (18) AS SHOWN. CONNECT LEADS TO HEADLIGHT (1).

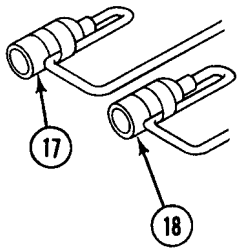

10. CONNECT CIRCUIT 20 LEAD (1) TO B/O MARKER (5).
11. INSTALL GROUND WIRE (3),, TWO NEW LOCKWASHERS (2), WASHER (6), SCREW (1), AND NEW LOCKNUT (5) ON MOUNT (4).

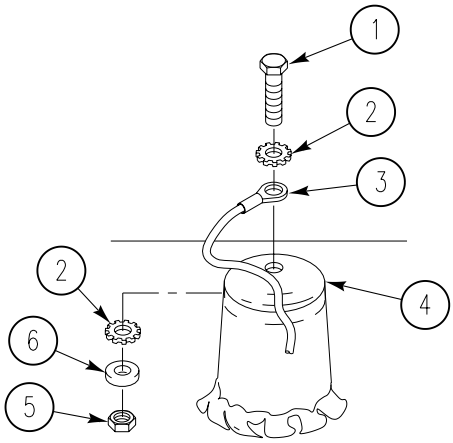

END OF TASK

REPLACE REAR MAIN WIRING HARNESS 1W4 0187 00

THIS WORK PACKAGE COVERS:

Removal (page 0187 00-1).
Test and Inspection (page 0187 00-15).
Installation (page 0187 00-16).

INITIAL SETUP:

Maintenance Level
Unit

Tools and Special Tools
General mechanic's tool kit (WP 0397 00, Item 64)

Materials/Parts
Locknut (9)
Lockwasher (18)
Tie strap

Personnel Required
Unit Mechanic 63T10

References
TM 9-2350-366-10-1

Equipment Condition
Engine stopped (TM 9-2350-366-10-1)
Vehicle blocked (TM 9-2350-366-10-1)
Rear floor plate removed (WP 0343 00)
Battery ground strap disconnected (WP 0237 00).

REMOVAL

1. DISCONNECT CIRCUIT 38 LEAD (1) FROM RIGHT, MIDDLE, AND REAR DOME LIGHTS (2).

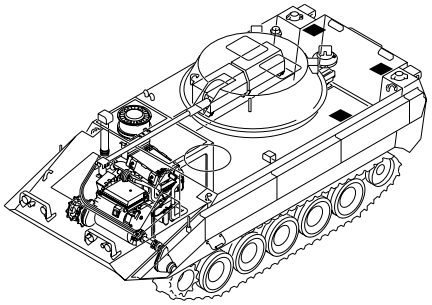

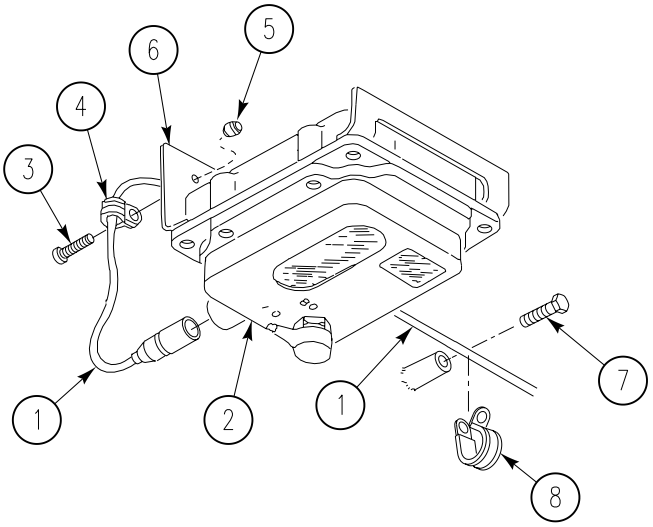

REPLACE REAR MAIN WIRING HARNESS 1W4 — Continued **0187 00**

2. DISCONNECT LEAD 38A (1) FROM DOME LIGHT DOOR SWITCH (4) AND LEAD 38 (2) FROM DOME LIGHT SWITCH CIRCUIT BREAKER (3).

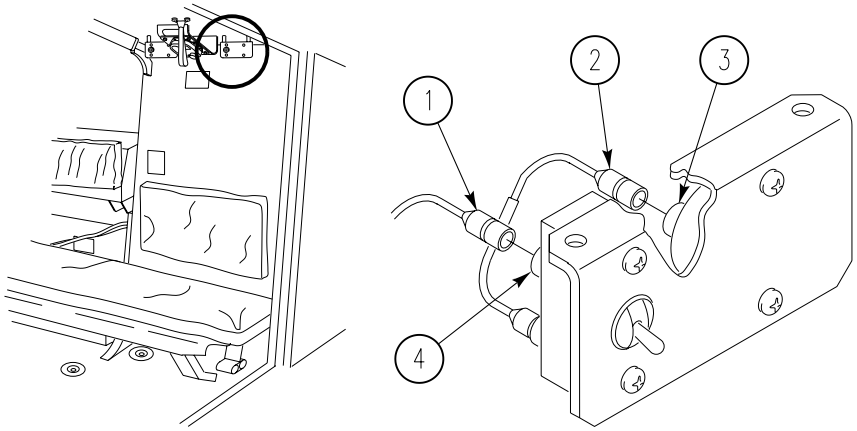

3. REMOVE SCREW (3), CLAMP (4), NUT (5), AND CIRCUIT 38 LEAD (1) FROM RIGHT, MIDDLE, AND REAR DOME LIGHT BRACKETS (6).

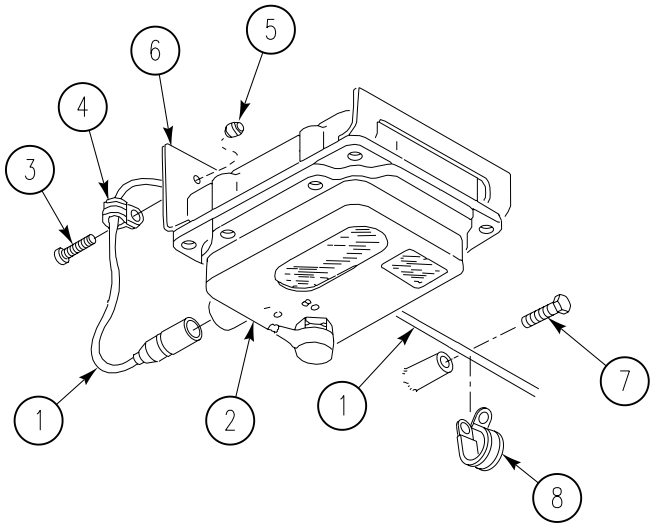

4. REMOVE 10 SCREWS (7), CLAMPS (8), AND CIRCUIT 38 LEAD (1) FROM 10 WELDNUTS.

5. DISCONNECT CIRCUIT 23 AND 24 LEADS (16) AND (17) FROM RIGHT TAIL LIGHT (18).

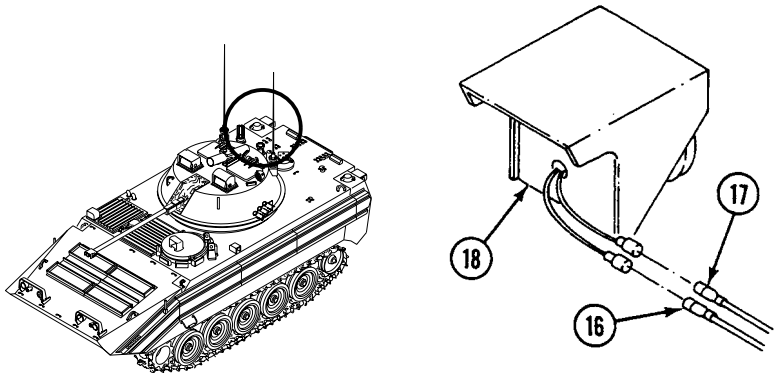

6. DISCONNECT CIRCUIT 31 LEAD (5) FROM RIGHT FUEL TRANSMITTER (6) ON FUEL TANK (7).

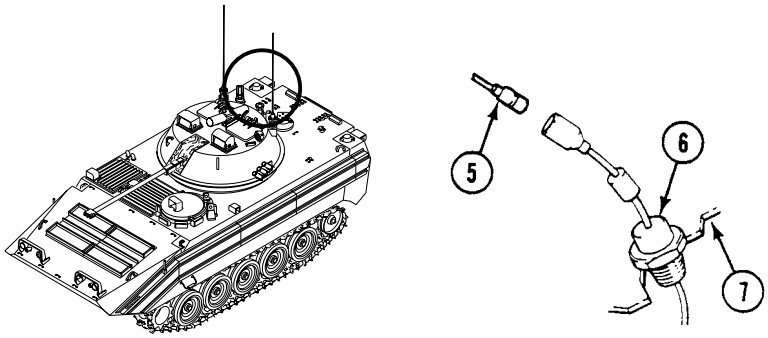

7. REMOVE TWO SCREWS (11), LOCKWASHERS (12), WASHERS (13) AND HARNESS GUARD (10) FROM TOP OF RIGHT FUEL TANK (6). DISCARD LOCKWASHERS.

8. REMOVE TWO SCREWS (7), LOCKWASHERS (9), WASHERS (8) THAT SECURE HARNESS BRACKET (5) ON TOP OF RIGHT FUEL TANK (6). REMOVE BRACKET FROM TANK. DISCARD LOCKWASHERS.

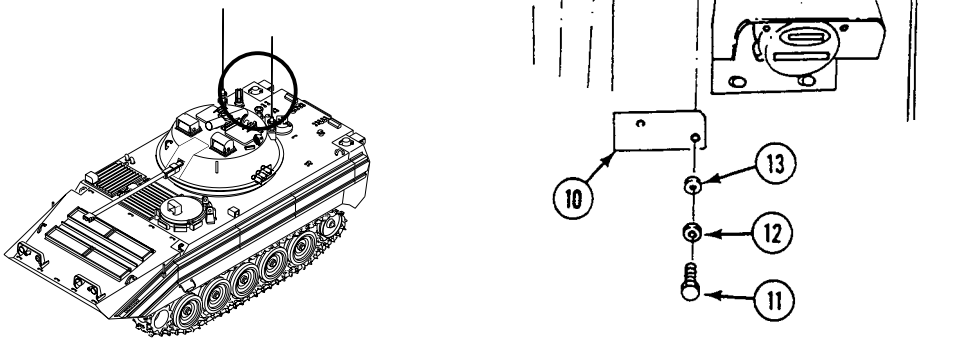

REPLACE REAR MAIN WIRING HARNESS 1W4 — Continued **0187 00**

9. REMOVE SCREW (16), LOCKWASHER (18), WASHER (17) AND HARNESS GUARD (19) FROM TOP OF REAR HULL. REMOVE GUARD FROM HULL. DISCARD LOCKWASHER.

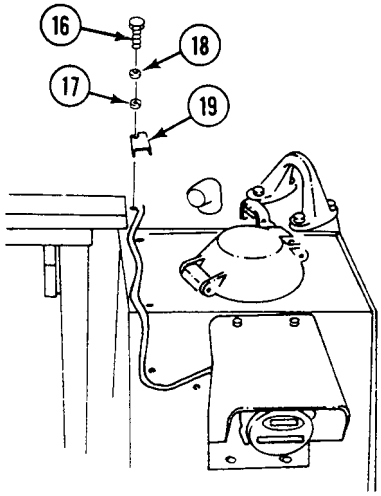

10. LOOSEN NUT (18) THAT SECURES CIRCUITS 23 (15), 24 (14), AND 31 (13) LEADS WITH RUBBER BUSHING (17) IN CONNECTOR (16). SEPARATE NUT, WASHER (19), AND RUBBER BUSHING FROM CONNECTOR.

11. REMOVE CONNECTOR (16) AND HARNESS FROM TOP OF HULL. PULL HARNESS INTO VEHICLE.

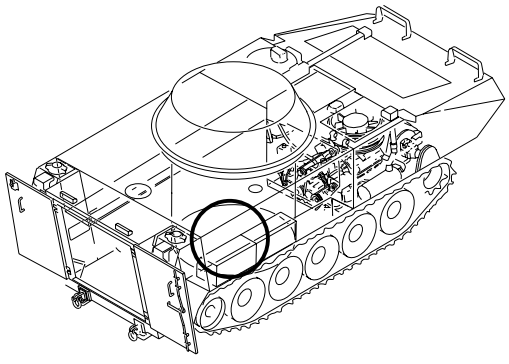

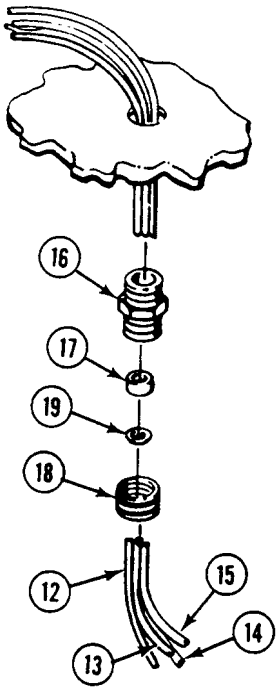

REPLACE REAR MAIN WIRING HARNESS 1W4 — Continued **0187 00**

12. IF PERSONNEL HEATER IS INSTALLED, DISCONNECT CIRCUIT 402 LEAD (18) FROM PERSONNEL HEATER FUEL PUMP (19).

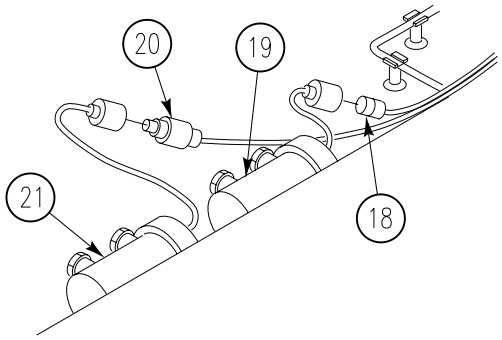

13. IF ENGINE COOLANT HEATER IS INSTALLED, DISCONNECT CIRCUIT 402A LEAD (20) FROM ENGINE COOLANT HEATER FUEL PUMP (21).
14. REMOVE STRAP (1) FROM HARNESS (2). DISCARD STRAP.
15. REMOVE TWO SCREWS (3), WASHERS (4), CLAMPS (12), AND HARNESS (2) FROM WELDNUTS.
16. REMOVE TWO SCREWS (5), WASHERS (6), AND HARNESS GUARD (7) FROM REAR HULL.
17. REMOVE TWO SCREWS (8), WASHERS (9), NUTS (10), AND CLAMPS (11) THAT SECURE HARNESS (2) AND GUARD (7) TO REAR HULL. REMOVE HARNESS FROM GUARD.

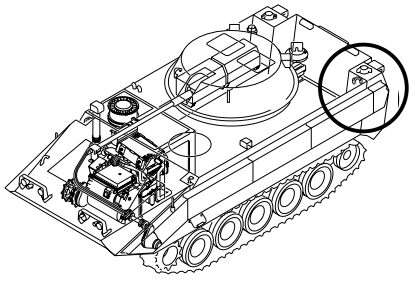

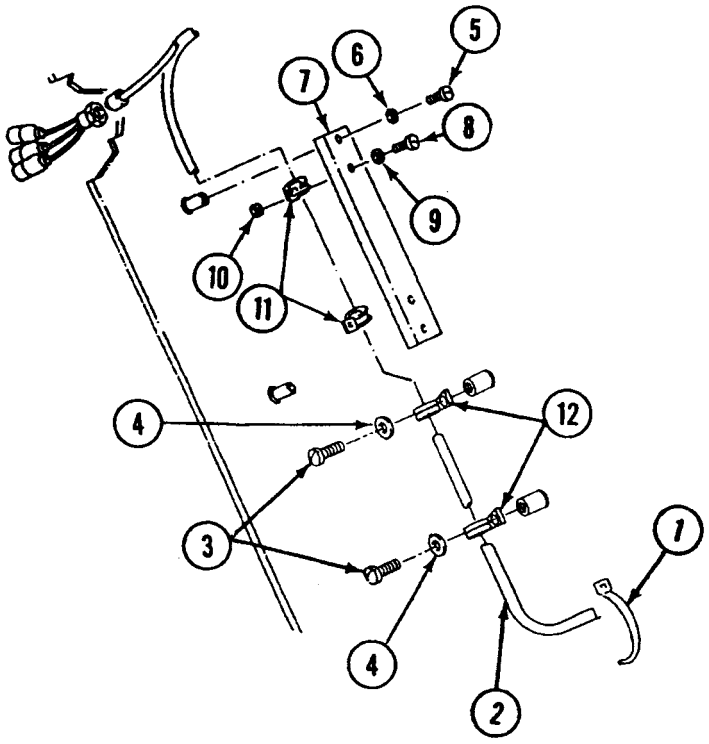

18. DISCONNECT CIRCUIT 21 (16), 22 (17), AND 24 (18) LEADS FROM LEFT TAIL LIGHT (19).

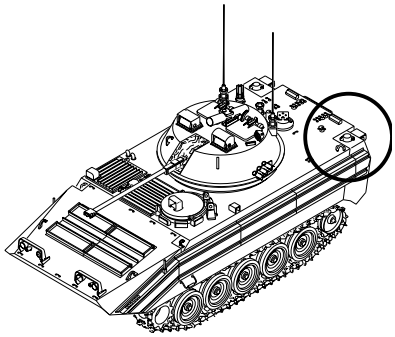

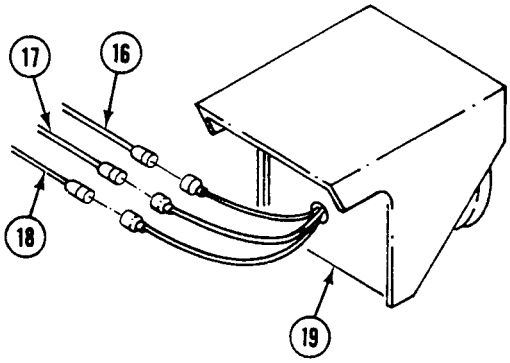

19. DISCONNECT CIRCUIT 30 LEAD (14) FROM FUEL TRANSMITTER (15) ON LEFT FUEL TANK (6).

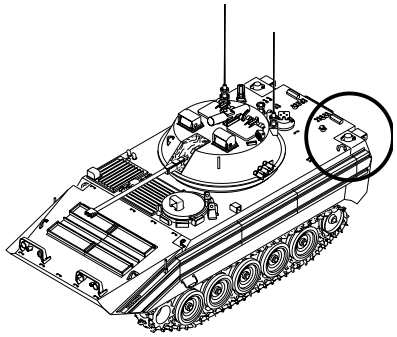

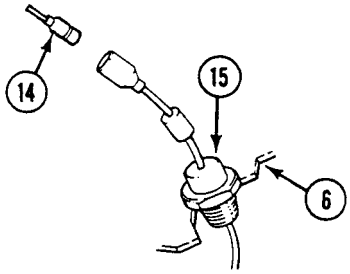

20. REMOVE TWO SCREWS (13), LOCKWASHERS (15), WASHERS (14) AND HARNESS GUARD (12) FROM TOP OF FUEL TANK (7). REMOVE GUARD. DISCARD LOCKWASHERS.

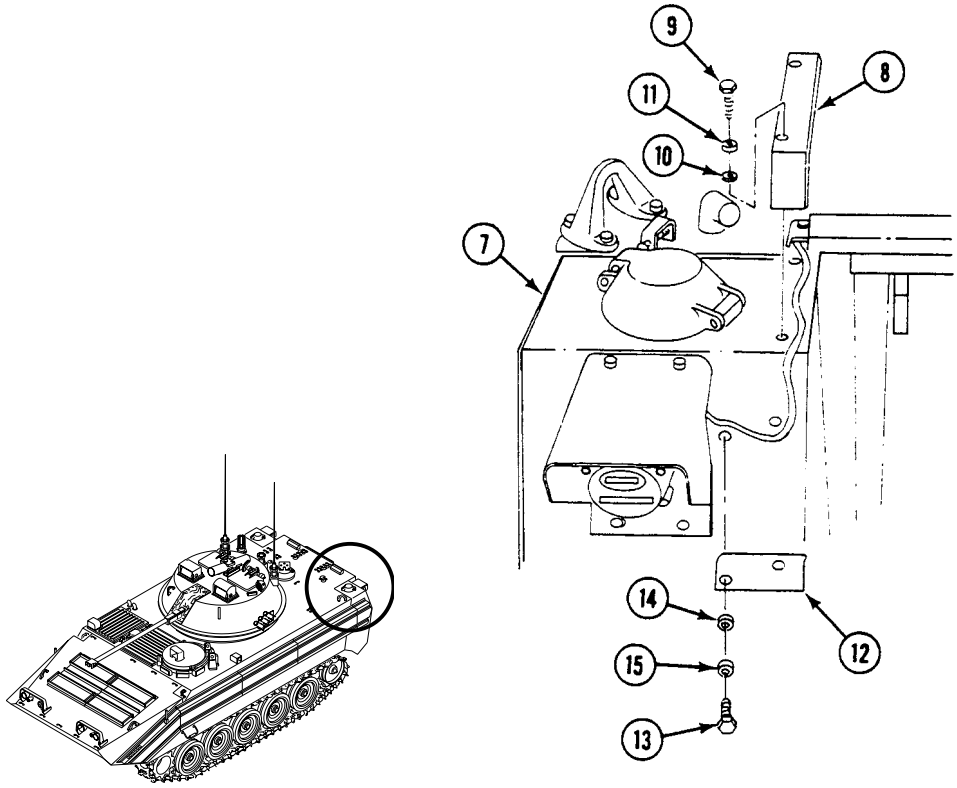

21. REMOVE TWO SCREWS (9), LOCKWASHERS (11), WASHERS (10) AND HARNESS BRACKET (8) FROM TOP OF FUEL TANK (7). REMOVE GUARD. DISCARD LOCKWASHERS.

22. REMOVE SCREW (2), LOCKWASHER (4), WASHER (3), AND HARNESS GUARD (1) FROM TOP OF REAR HULL. REMOVE GUARD. DISCARD LOCKWASHER.

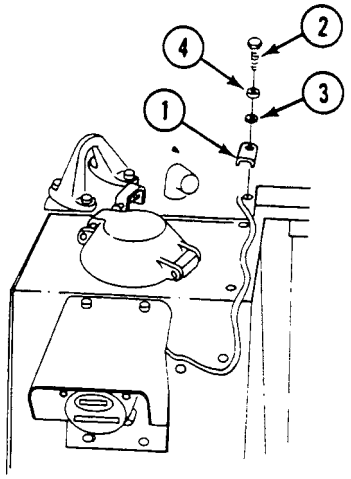

23. LOOSEN NUT (18) THAT SECURES CIRCUIT 21 (15), 22 (12), 24 (13), AND 30 (14) LEADS WITH RUBBER BUSHING (17) IN CONNECTOR (16). SEPARATE NUT, WASHER (19), AND RUBBER BUSHING FROM CONNECTOR.

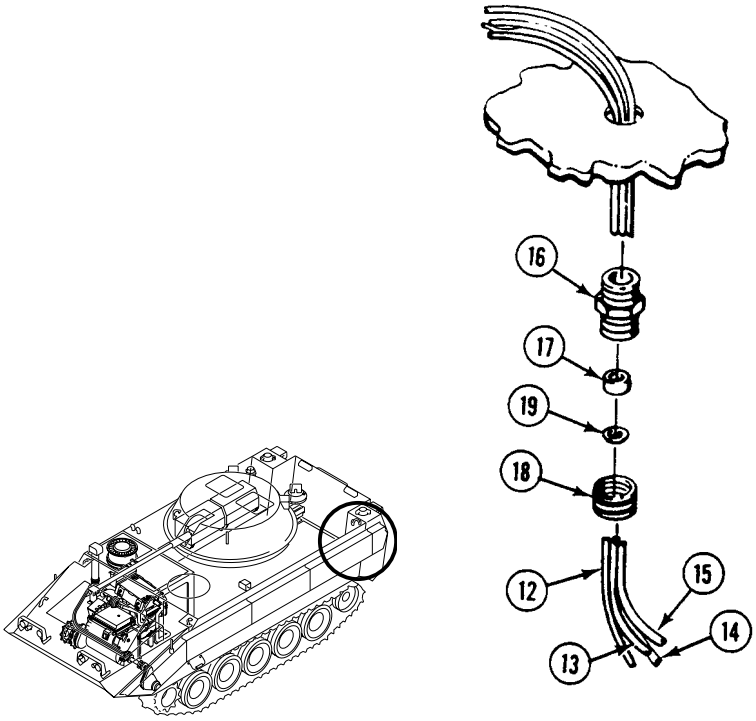

24. REMOVE CONNECTOR (16) AND HARNESS FROM TOP OF HULL. PULL HARNESS INTO VEHICLE.

25. REMOVE 12 SCREWS (18), WASHERS (19), CLAMPS (17), AND HARNESS (16) FROM LEFT SIDE PLATE OF HULL.

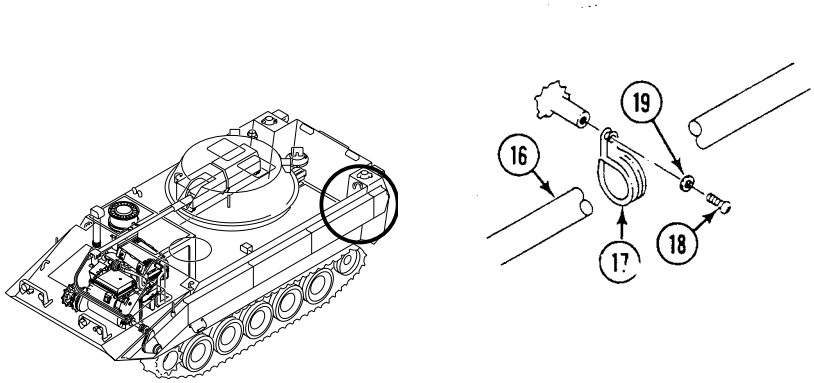

26. IF PERSONNEL HEATER IS INSTALLED, DISCONNECT CIRCUIT 402 LEAD (4) FROM PERSONNEL HEATER WIRING HARNESS.

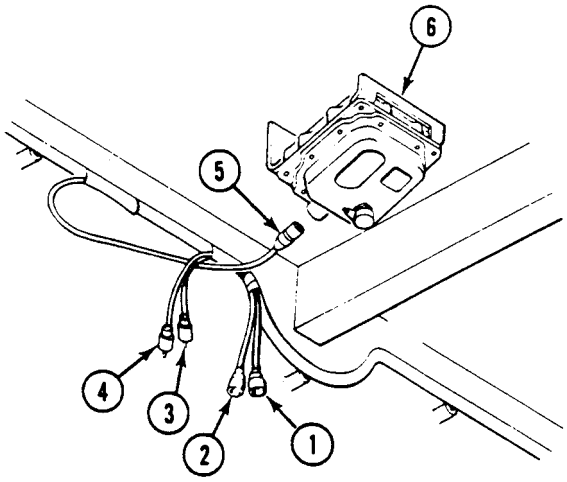

27. DISCONNECT LEAD 4 (1) FROM 1W2P2 (4), LEAD 4A (2) FROM 1S6P3 (3), AND CONNECTOR (5) FROM TURRET SHIELD MAGNETIC SWITCH.

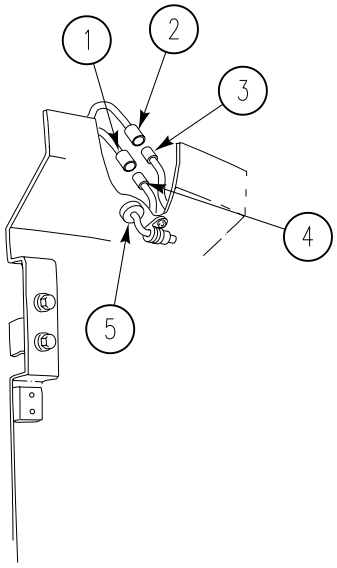

28. IF ENGINE COOLANT HEATER IS INSTALLED, DISCONNECT CIRCUIT 402A LEAD (3) FROM COOLANT HEATER WIRING HARNESS.

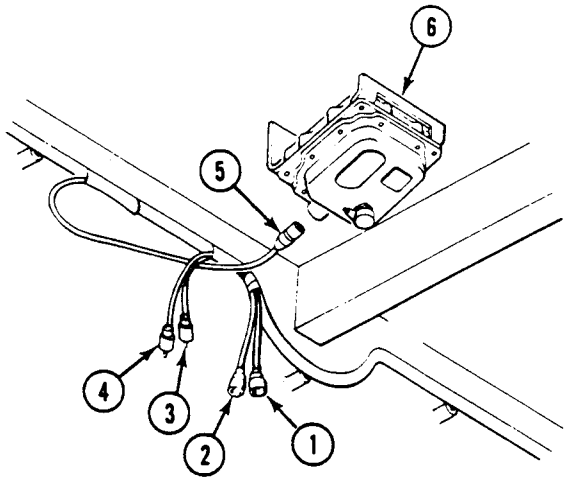

29. IF PERSONNEL AND COOLANT HEATER ARE INSTALLED, DISCONNECT CIRCUIT 400 LEAD (1) FROM PERSONNEL HEATER CONTROL BOX AND CIRCUIT 400A LEAD (2) FROM COOLANT HEATER CONTROL BOX.

30. REMOVE THREE SCREWS (18), WASHERS (19), CLAMPS (17), AND HARNESS (16) FROM LEFT FRONT SIDE PLATE OF HULL.

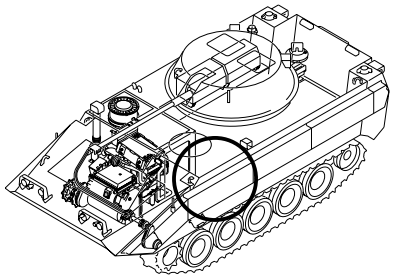

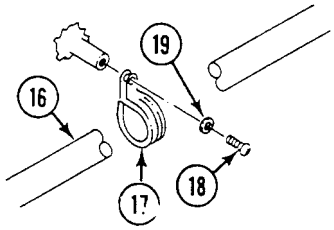

REPLACE REAR MAIN WIRING HARNESS 1W4 — Continued **0187 00**

31. DISCONNECT CIRCUIT 58A (1) FROM DRIVER'S FRESH AIR FAN SWITCH-TO-FAN (4) AND CIRCUIT 58 (2) FROM DRIVER'S FRESH AIR FAN SWITCH (3).

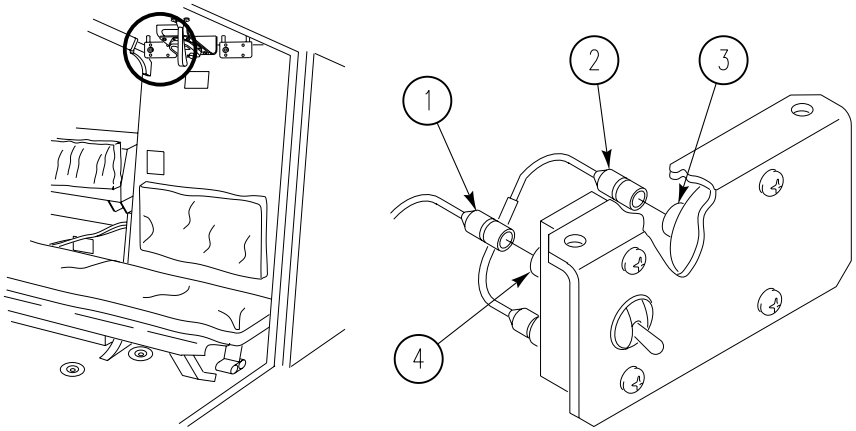

32. REMOVE EIGHT SCREWS (1), WASHERS (2), LOCKNUTS (3), AND MASTER SWITCH PANEL (4) FROM DISTRIBUTION BOX (5). DISCARD LOCKNUTS.

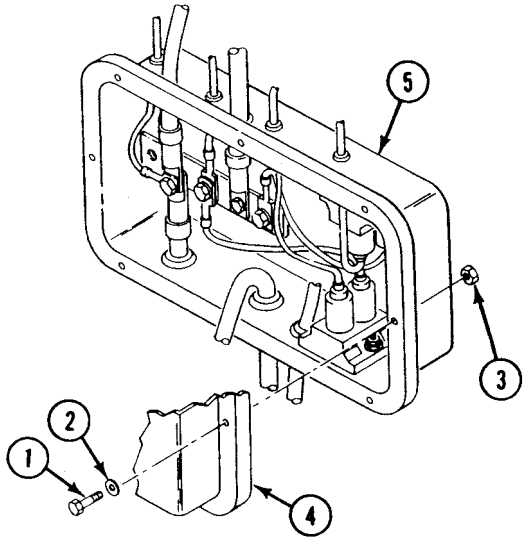

33. REMOVE LOCKNUT (6), CIRCUIT 2 (7), 400 (8), AND 6 (9) LEADS FROM CONDUCTOR BUS (10) OF MASTER SWITCH PANEL (4). REMOVE CIRCUIT 400 LEAD (8) WITH GROMMET (11) FROM DISTRIBUTION BOX (5). DISCARD LOCKNUT.

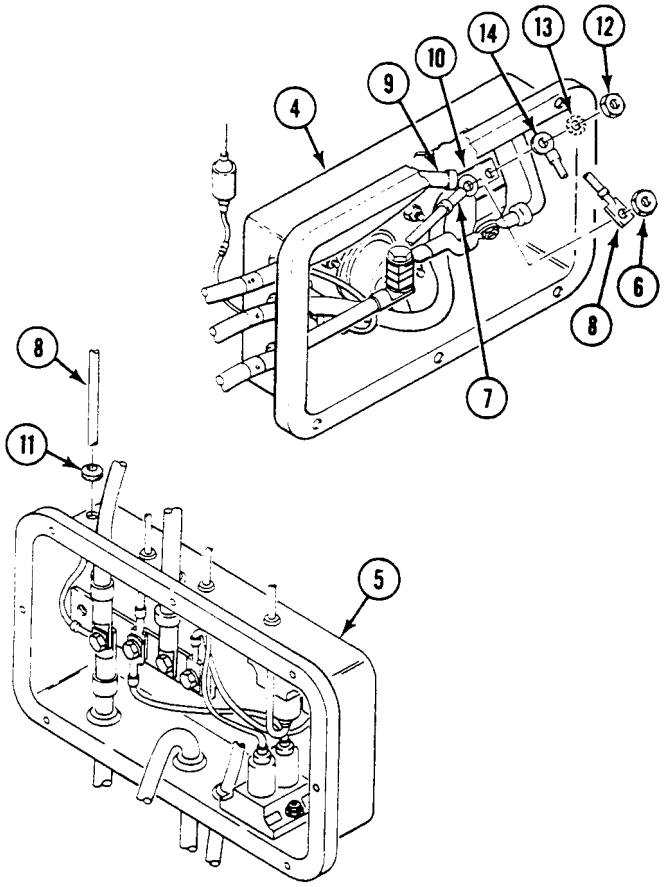

34. REMOVE NUT (12), LOCKWASHER (13), AND CIRCUIT 2A LEAD (14) FROM CONDUCTOR BUS (10). DISCARD LOCKWASHER.

35. DISCONNECT CIRCUIT 37 LEAD (15) FROM CIRCUIT 37 LEAD (16) OF UTILITY OUTLET (17) ON MASTER SWITCH PANEL (4).

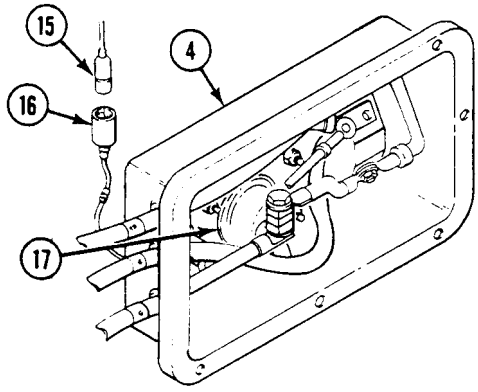

REPLACE REAR MAIN WIRING HARNESS 1W4 — Continued **0187 00**

36. DISCONNECT CIRCUIT 450 LEAD (1) FROM BILGE PUMP CIRCUIT BREAKER (2) IN DISTRIBUTION BOX (3). REMOVE CIRCUIT 450 LEAD WITH GROMMET (4) FROM DISTRIBUTION BOX.

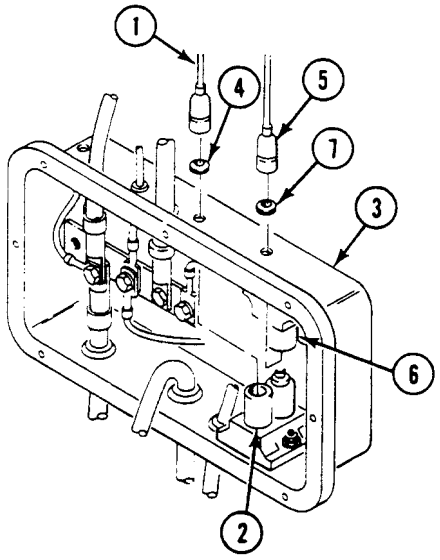

37. DISCONNECT CIRCUIT 450B LEAD (5) FROM BILGE PUMP CIRCUIT BREAKER (6) IN DISTRIBUTION BOX (3). REMOVE CIRCUIT 450B WITH GROMMET (7) FROM DISTRIBUTION BOX.

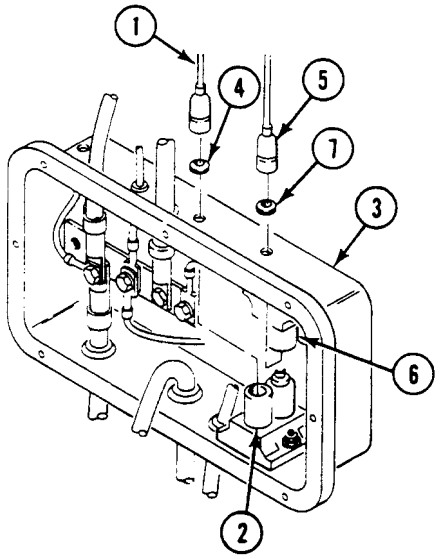

38. REMOVE SCREW (1), LOCKWASHER (2), AND CIRCUITS 38 AND 59 (3) FROM BUS BAR (4). DISCARD LOCKWASHER.

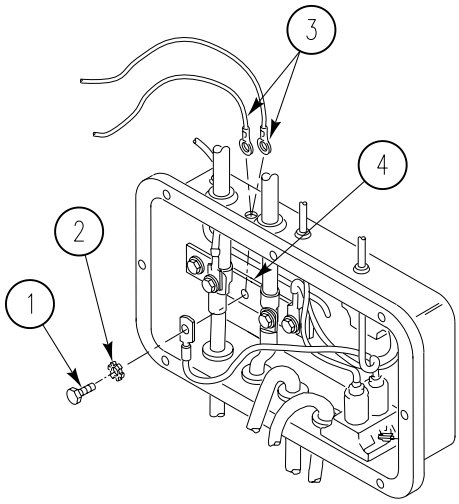

39. REMOVE TWO NUTS (9), MOUNTS (11), FLAT WASHERS (13), AND SCREWS (14) THAT SECURE INSTRUMENT PANEL (1) TO TWO STRUTS (10).

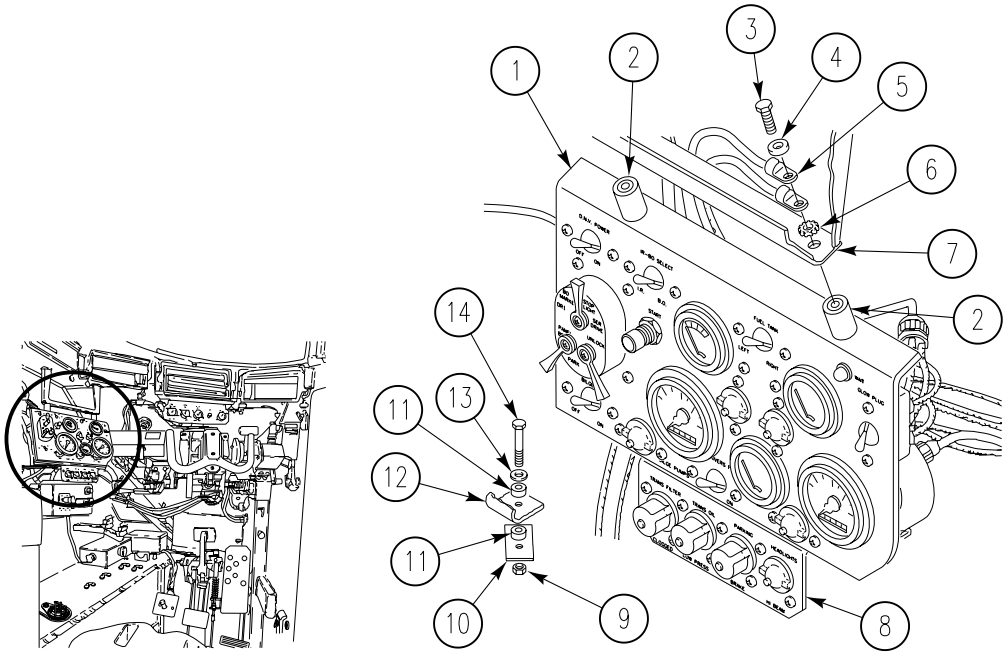

40. SUPPORT PANEL. REMOVE TWO SCREWS (3), WASHERS (4), ONE LOCKWASHER (6), AND GROUND LEAD (5) FROM TWO MOUNTS (2) AND UPPER SUPPORT (7). DISCARD LOCKWASHER.

41. SUPPORT PANEL (1) ON TWO STRUTS (10) TO GAIN ACCESS TO REAR OF PANEL.

42. DISCONNECT CIRCUIT 30 (20) AND 31 (21) LEADS FROM FUEL LEVEL GAUGE SWITCH (22).

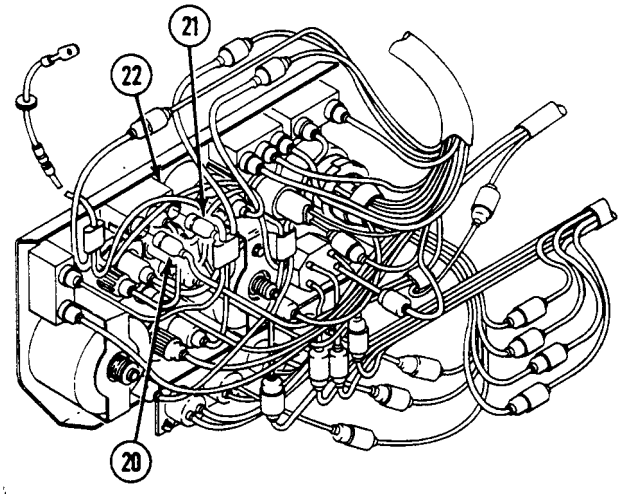

43. DISCONNECT CIRCUIT 450 (3), 450B (4), AND 451A (5) LEADS FROM BILGE PUMP SWITCH (6).

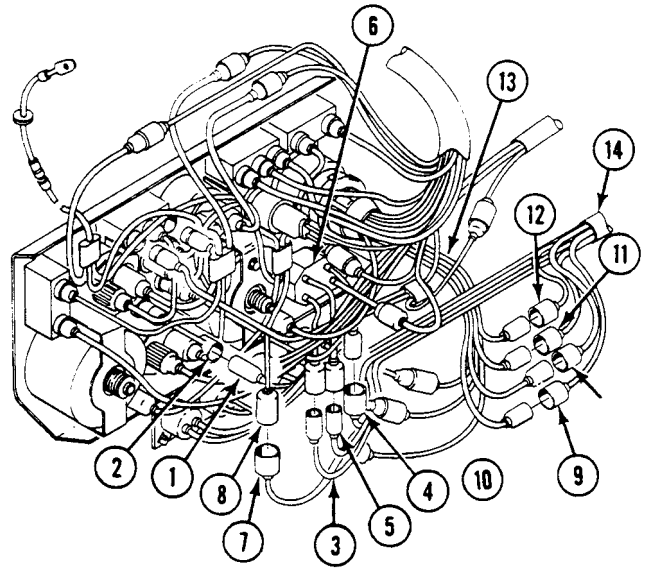

44. DISCONNECT CIRCUIT 38 LEAD (7) FROM SPECIAL PURPOSE CABLE ASSEMBLY (8).

45. DISCONNECT CIRCUIT 21 (9), 22 (10), 23 (11), AND 24 (12) LEADS FROM FRONT MAIN WIRING HARNESS (13).

46. REMOVE REAR MAIN WIRING HARNESS (14) FROM VEHICLE.

TEST AND INSPECTION

1. INSPECT FOR DAMAGED CONNECTORS AND TERMINALS. REPAIR AS NEEDED (WP 0189 00).

REPLACE REAR MAIN WIRING HARNESS 1W4 — Continued **0187 00**

INSTALLATION

1. CONNECT CIRCUIT 21 (15), 22 (16), 23 (17), AND 24 (18) LEADS TO FRONT MAIN WIRING HARNESS (19).

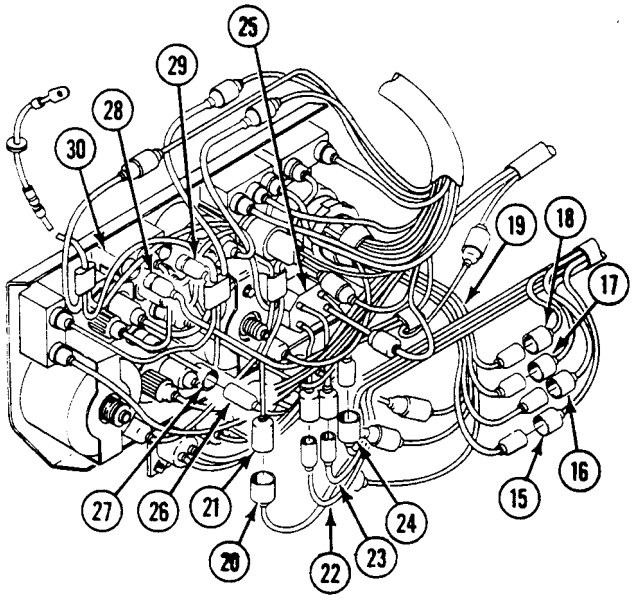

2. CONNECT CIRCUIT 38 LEAD (20) TO SPECIAL PURPOSE CABLE ASSEMBLY (21).
3. CONNECT CIRCUIT 450 (22), 450B (23), AND 451A (24) LEADS TO BILGE PUMP SWITCH (25).
4. CONNECT CIRCUIT 30 (28) AND 31 (29) LEADS TO FUEL LEVEL GAUGE SWITCH (30).
5. SUPPORT INSTRUMENT PANEL (1) ON TWO STRUTS (10).

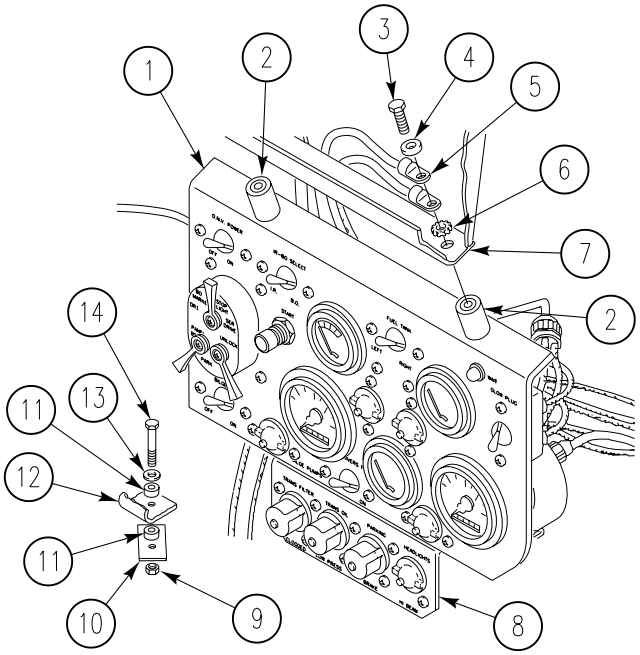

REPLACE REAR MAIN WIRING HARNESS 1W4 — Continued **0187 00**

6. INSTALL GROUND LEAD (5) AND NEW LOCKWASHER (6) ON UPPER SUPPORT (7). INSTALL PANEL (1) WITH TWO MOUNTS (2) ON SUPPORT (7) WITH TWO SCREWS (3) AND WASHERS (4).
7. INSTALL PANEL (1) ON TWO STRUTS (10) WITH TWO NUTS (9), MOUNTS (11), FLAT WASHERS (13), AND SCREWS (14).
8. INSTALL CIRCUITS 38 AND 59 (3), NEW LOCKWASHER (2), AND SCREW (1) ON BUS BAR (4).

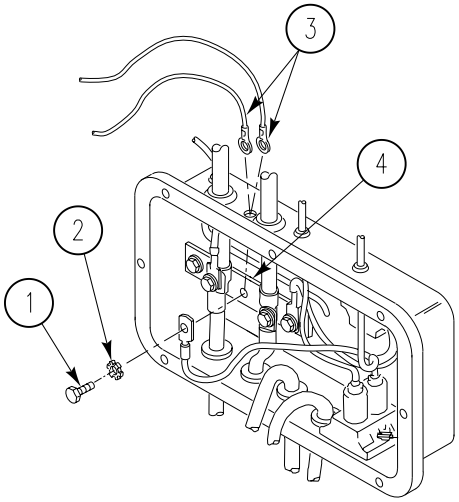

9. INSTALL NEW GROMMET (13) AND CIRCUIT 450B LEAD (14) IN DISTRIBUTION BOX (15). CONNECT 450B LEAD TO REAR BILGE PUMP CIRCUIT BREAKER (16).

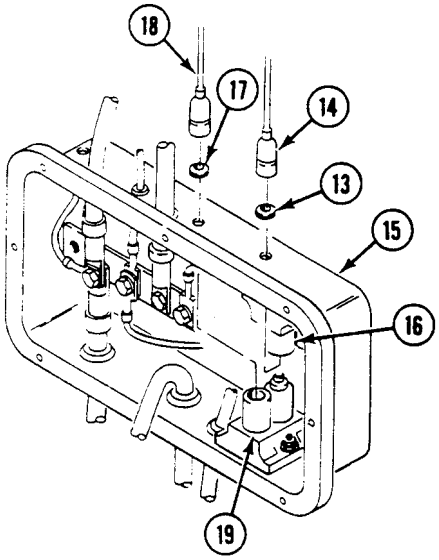

10. INSTALL NEW GROMMET (17) AND CIRCUIT 450 LEAD (18) IN DISTRIBUTION BOX (15). CONNECT 450 LEAD TO FRONT BILGE PUMP CIRCUIT BREAKER (19).

11. CONNECT CIRCUIT 37 LEAD (15) TO CIRCUIT 37 LEAD (16) OF UTILITY OUTLET (17) ON MASTER SWITCH PANEL (4).

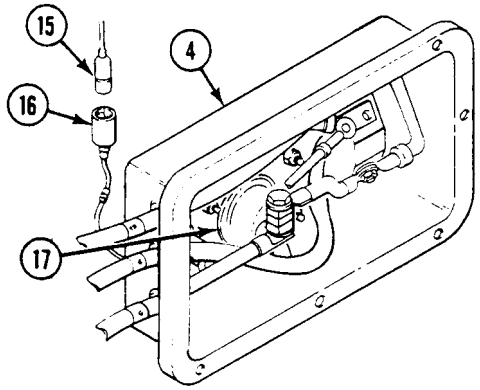

12. INSTALL NEW GROMMET (1) ON CIRCUIT 400 LEAD (2). ROUTE LEAD INTO DISTRIBUTION BOX (3).

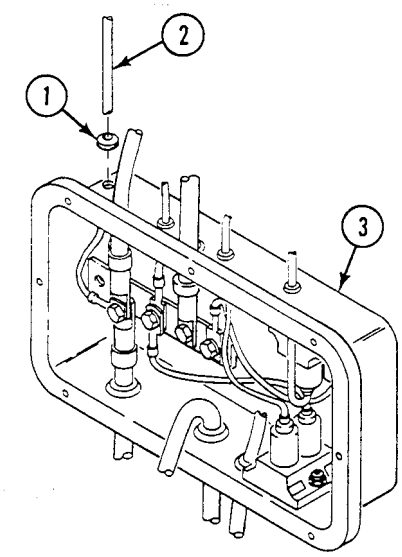

13. INSTALL CIRCUIT 6 (4), 2 (5), AND 400 (6) LEADS ON CONDUCTOR BUS (7) OF MASTER SWITCH PANEL (8) WITH NEW LOCKNUT (9).

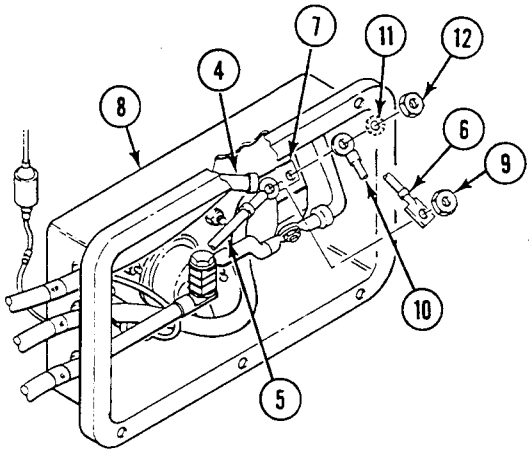

14. INSTALL CIRCUIT 2A LEAD (10) ON CONDUCTOR BUS (7) OF MASTER SWITCH PANEL (8) WITH NEW LOCKWASHER (11) AND NUT (12).
15. INSTALL MASTER SWITCH PANEL (4) ON DISTRIBUTION BOX (5) WITH EIGHT SCREWS (1), WASHERS (2), AND NEW LOCKNUTS (3).

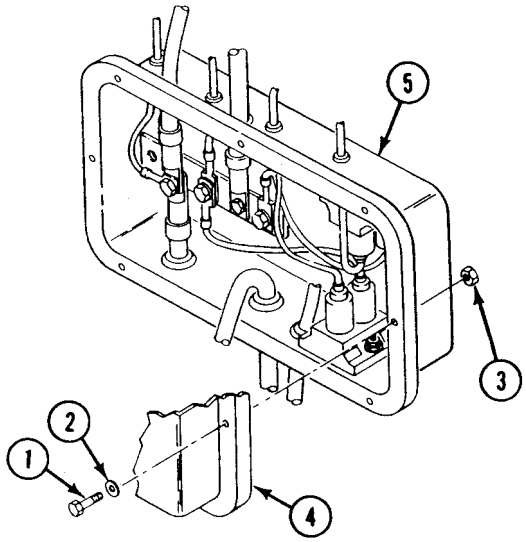

REPLACE REAR MAIN WIRING HARNESS 1W4 — Continued **0187 00**

16. INSTALL HARNESS (16) ON LEFT FRONT SIDE PLATE OF HULL, NEAR INSTRUMENT PANEL, WITH THREE CLAMPS (17), SCREWS (18), AND WASHERS (19).

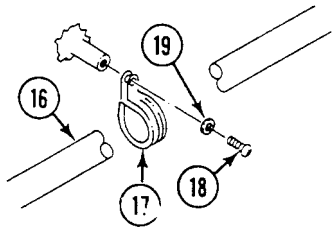

17. CONNECT CIRCUIT 59 A (1) TO DRIVER'S FRESH AIR FAN SWITCH-TO-FAN (4) AND CIRCUIT 59 (2) TO DRIVER'S FRESH AIR FAN SWITCH (3).

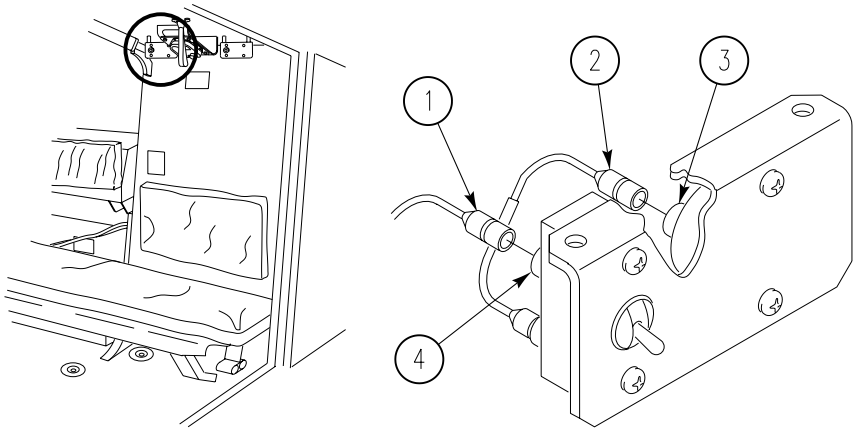

18. IF PERSONNEL HEATER IS INSTALLED, CONNECT CIRCUIT 400 LEAD (1) TO PERSONNEL HEATER CONTROL BOX.

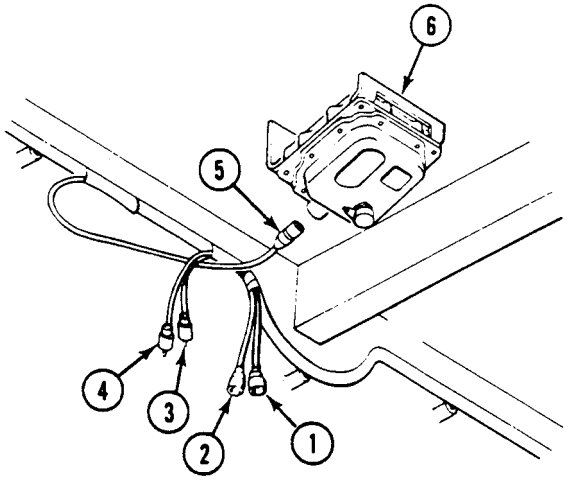

REPLACE REAR MAIN WIRING HARNESS 1W4 — Continued **0187 00**

19. IF ENGINE COOLANT HEATER IS INSTALLED, CONNECT CIRCUIT 400A LEAD (2) TO COOLANT HEATER CONTROL BOX.
20. IF ENGINE COOLANT HEATER IS INSTALLED, CONNECT CIRCUIT 402A LEAD (3) TO COOLANT HEATER WIRING HARNESS.
21. IF PERSONNEL HEATER IS INSTALLED, CONNECT CIRCUIT 402 LEAD (4) TO PERSONNEL HEATER WIRING HARNESS.
22. CONNECT LEAD 4 (1) TO 1W2P2 (4), LEAD 4A (2) TO 1S6P3 (3), AND CONNECTOR (5) TO TURRET SHIELD MAGNETIC SWITCH.

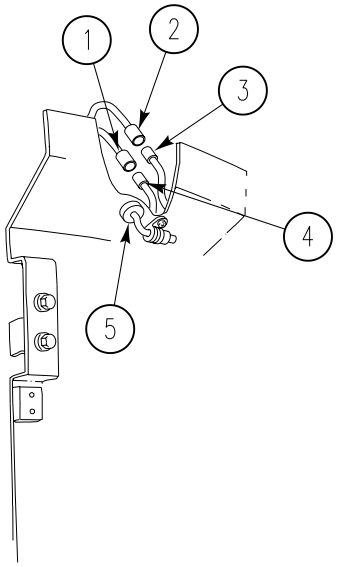

23. CONNECT CIRCUIT 38 LEAD (5) TO LEFT DOME LIGHT (6).

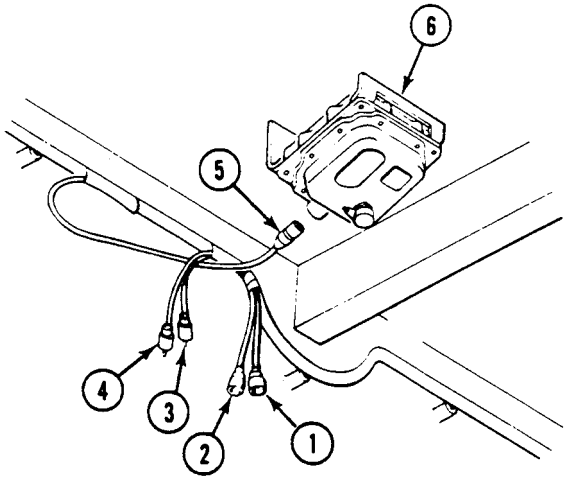

24. INSTALL HARNESS (16) ALONG LEFT SIDE PLATE OF HULL ON WELD NUTS WITH 12 CLAMPS (17), SCREWS (18), AND WASHERS (19).

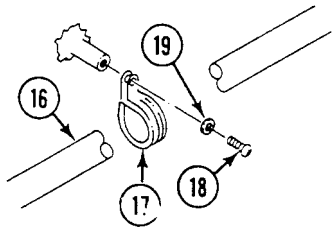

25. ROUTE CIRCUIT 21 (12), 22 (13), 24 (14), AND 30 (15) LEADS THROUGH CONNECTOR (16) AND OUT OF VEHICLE. INSTALL CONNECTOR ON REAR TOP OF HULL.

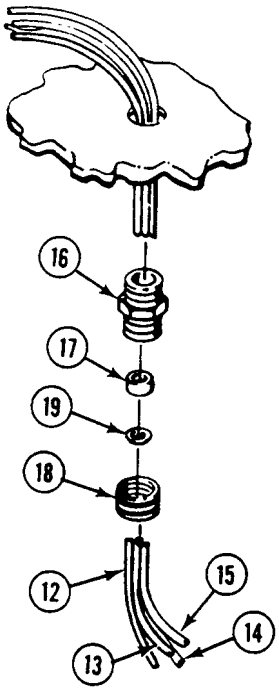

26. INSTALL RUBBER BUSHING (17) INTO CONNECTOR (16). SECURE BUSHING AND LEADS IN CONNECTOR WITH NUT (18) AND WASHER (19).

27. INSTALL HARNESS GUARD (1) ON TOP OF REAR HULL WITH SCREW (2), WASHER (3), AND NEW LOCKWASHER (4).

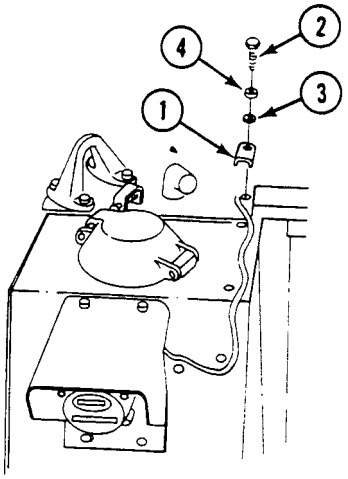

28. CONNECT CIRCUIT 30 LEAD (5) TO TRANSMITTER (6) ON LEFT FUEL TANK (7).

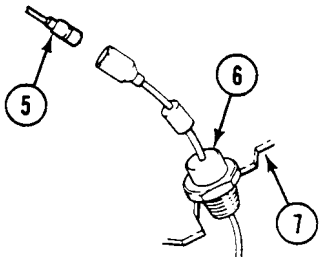

29. INSTALL HARNESS BRACKET (8) ON TOP OF LEFT FUEL TANK (7) WITH TWO SCREWS (9), WASHERS (10), AND NEW LOCKWASHERS (11).

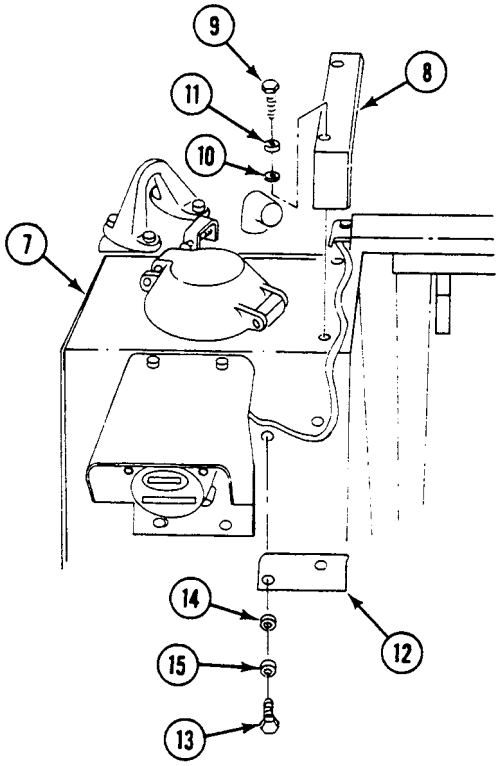

30. INSTALL HARNESS GUARD (12) ON TOP OF LEFT FUEL TANK (7) WITH TWO SCREWS (13), WASHERS (14), AND NEW LOCKWASHERS (15).

31. CONNECT CIRCUIT 21 (16), 22 (17), AND 24 (18) LEADS TO LEFT TAIL LIGHT (19).

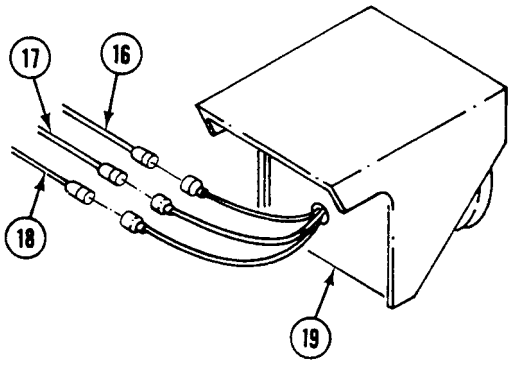

32. INSTALL HARNESS (2) ON GUARD (7) WITH TWO CLAMPS (11), SCREWS (8), WASHERS (9), AND NUTS (10).

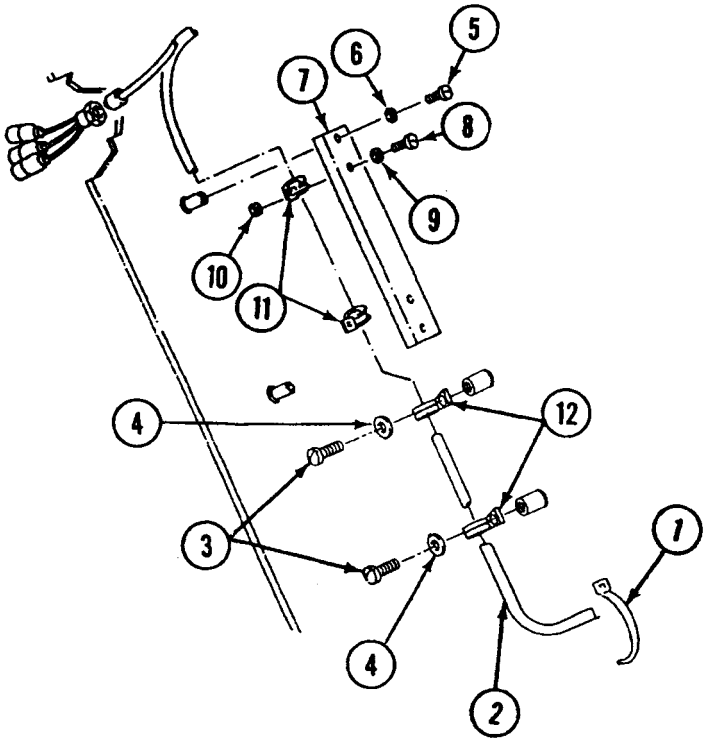

33. INSTALL HARNESS (2) AND GUARD (7) ON REAR HULL WITH TWO SCREWS (8) AND WASHERS (9).
34. INSTALL HARNESS (2) IN TWO CLAMPS (12) AND INSTALL CLAMPS, WASHERS (4) AND SCREWS (3) ON WELDNUTS.
35. INSTALL NEW STRAP (1) ON HARNESS (2).
36. IF ENGINE COOLANT HEATER IS INSTALLED, CONNECT CIRCUIT 402A LEAD (20) TO ENGINE COOLANT HEATER FUEL PUMP (21).

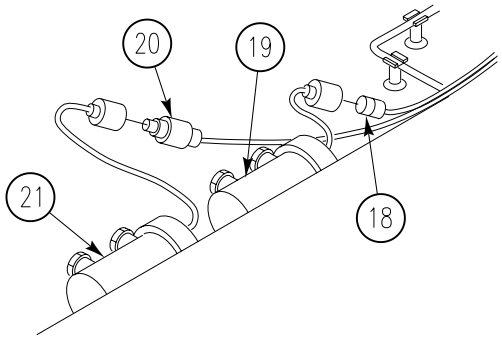

37. IF PERSONNEL HEATER IS INSTALLED, CONNECT CIRCUIT 402 LEAD (18) TO PERSONNEL HEATER FUEL PUMP (19).

38. ROUTE CIRCUIT 23 (25), 24 (26), AND 31 (27) LEADS THROUGH CONNECTOR (28) OUT OF HULL. INSTALL CONNECTOR ON TOP OF HULL (FROM INSIDE HULL).

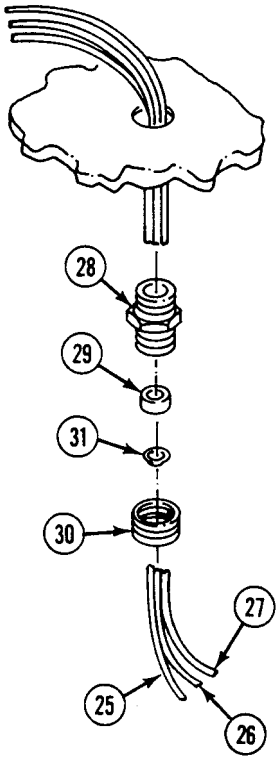

39. INSTALL RUBBER BUSHING (29) WITH LEADS (25), (26). (27) IN CONNECTOR (28) WITH NUT (30) AND WASHER (31).

40. INSTALL HARNESS GUARD (19) ON TOP OF REAR HULL WITH SCREW (16), NEW LOCKWASHER (18), AND WASHER (17).

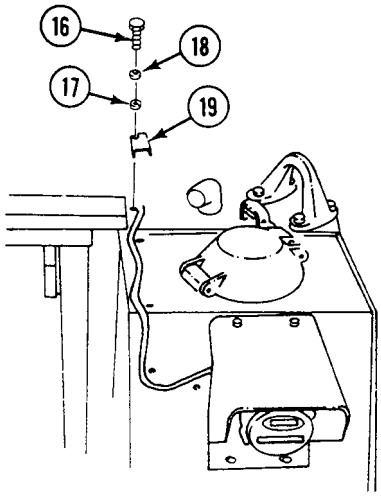

41. INSTALL HARNESS BRACKET (5) ON TOP OF RIGHT FUEL TANK (6) WITH TWO SCREWS (7), NEW LOCKWASHERS (8), AND WASHERS (9).

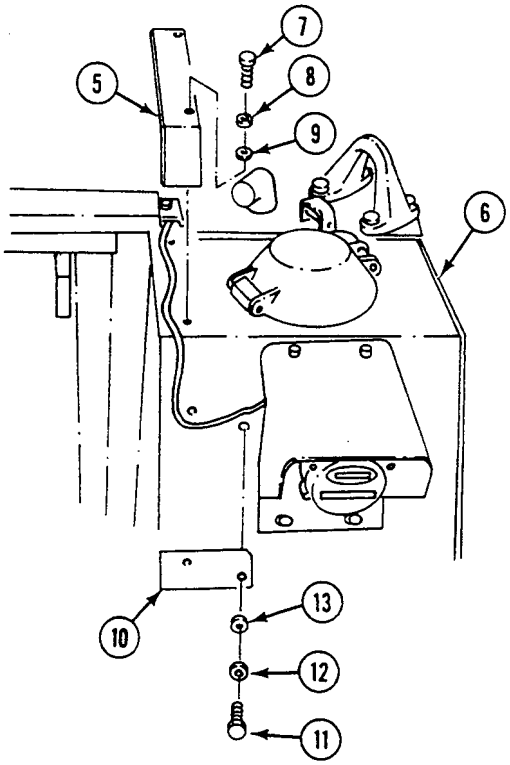

42. INSTALL HARNESS GUARD (10) ON TOP OF RIGHT FUEL TANK (6) WITH TWO SCREWS (11), NEW LOCKWASHERS (12), AND WASHERS (13).

43. CONNECT CIRCUIT 31 LEAD (14) TO RIGHT FUEL TRANSMITTER (15) ON FUEL TANK (6).

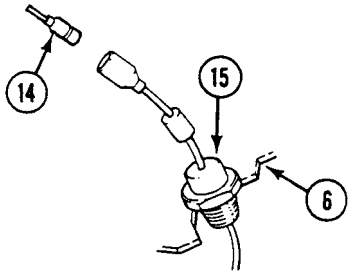

44. CONNECT CIRCUIT 23 (16) AND 24 (17) LEADS TO RIGHT TAIL LIGHT (18).

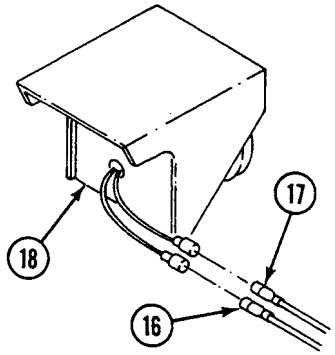

45. INSTALL TWO SCREWS (13) NEW LOCKWASHERS (15), WASHERS (14), AND HARNESS GUARD (12) ON TOP OF LEFT FUEL TANK (7).

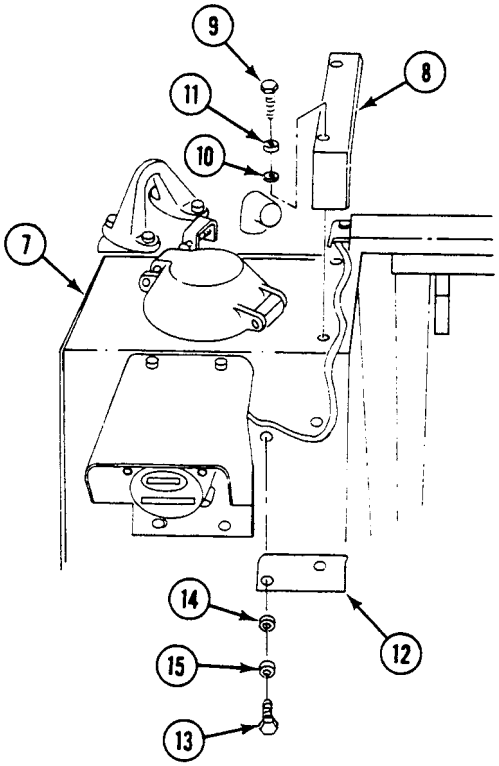

46. INSTALL TWO SCREWS (9), NEW LOCKWASHERS (11), WASHERS (10), AND HARNESS BRACKET (8) TO TOP OF FUEL TANK (7).

47. INSTALL CIRCUIT 38 LEAD (1) IN 10 CLAMPS (8) AND INSTALL CLAMPS AND SCREWS (7) ON WELDNUTS.

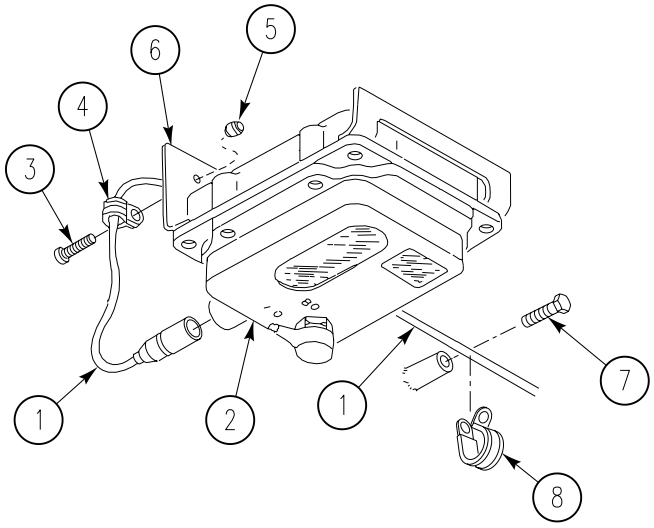

48. INSTALL CIRCUIT 38 LEAD (1) ON RIGHT, MIDDLE, AND REAR DOME LIGHT BRACKET (6) WITH CLAMP (4), SCREW (3), AND NUT (5).

49. CONNECT CIRCUIT 38 LEAD (1) TO RIGHT, MIDDLE, AND REAR DOME LIGHT (2).

50. CONNECT LEAD 38A (1) TO DOME LIGHT DOOR SWITCH (4) AND LEAD 38 (2) FROM DOOM LIGHT SWITCH CIRCUIT BREAKER (3).

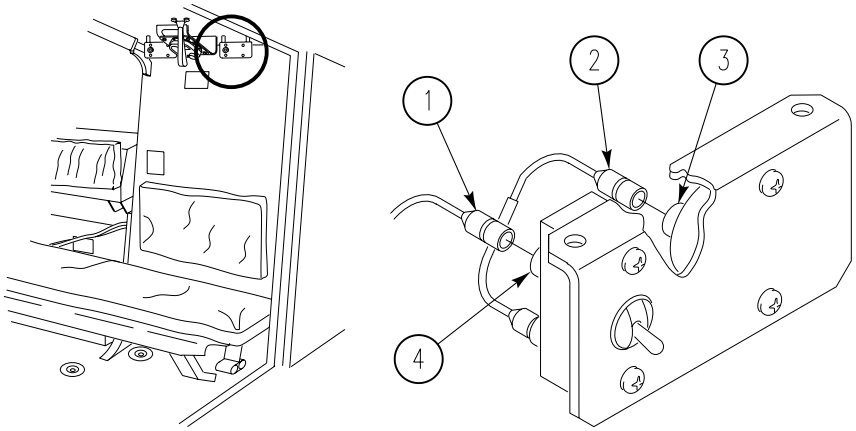

51. INSTALL REAR FLOOR PLATE (WP 0343 00).

52. CONNECT BATTERY GROUND STRAP (WP 0237 00).

53. START ENGINE. See TM 9-2350-366-10-1.

54. CHECK THAT ELECTRICAL SYSTEM WORKS RIGHT. See TM 9-2350-366-10-1.

55. CLOSE AND LOCK REAR PERSONNEL DOORS. See TM 9-2350-366-10-1.

56. STOP ENGINE. See TM 9-2350-366-10-1.

END OF TASK

REPLACE TRANSMISSION CONTROLLER WIRING HARNESS 0188 00

THIS WORK PACKAGE COVERS:

Removal (page 0188 00-1).
Inspect and Repair (page 0188 00-5).
Installation (page 0188 00-5).

INITIAL SETUP:

Maintenance Level
Unit

Tools and Special Tools
General mechanic's tool kit (WP 0397 00, Item 64)
Multimeter (WP 0397 00, Item 30)

Materials/Parts
Locknut (2)
Locknut
Locknut (4)
Lockwasher
Lockwasher (3)

Personnel Required
Unit mechanic 63T10
Helper (H)

References
TM 9-2350-366-10-1

Equipment Condition
Engine stopped (TM 9-2350-366-10-1)
Carrier blocked (TM 9-2350-366-10-1)
Engine access panel removed (TM 9-2350-366-10-1)
Driver's power plant access panel removed (TM 9-2350-366-10-1)
Battery ground strap disconnected (WP 0237 00)
Front power plant access doors removed (TM 9-2350-366-10-1)

REMOVAL

1. REMOVE TWO LOCKNUTS (9), MOUNTS (11), WASHERS (13), AND SCREWS (14) THAT SECURE INSTRUMENT PANEL (1) TO TWO STRUTS (10). DISCARD LOCKNUTS.
2. SUPPORT INSTRUMENT PANEL. REMOVE TWO SCREWS (3), WASHERS (4), GROUND LEAD (5), AND LOCKWASHER (6) FROM TWO MOUNTS (2) AND UPPER SUPPORT (7). DISCARD LOCKWASHER.

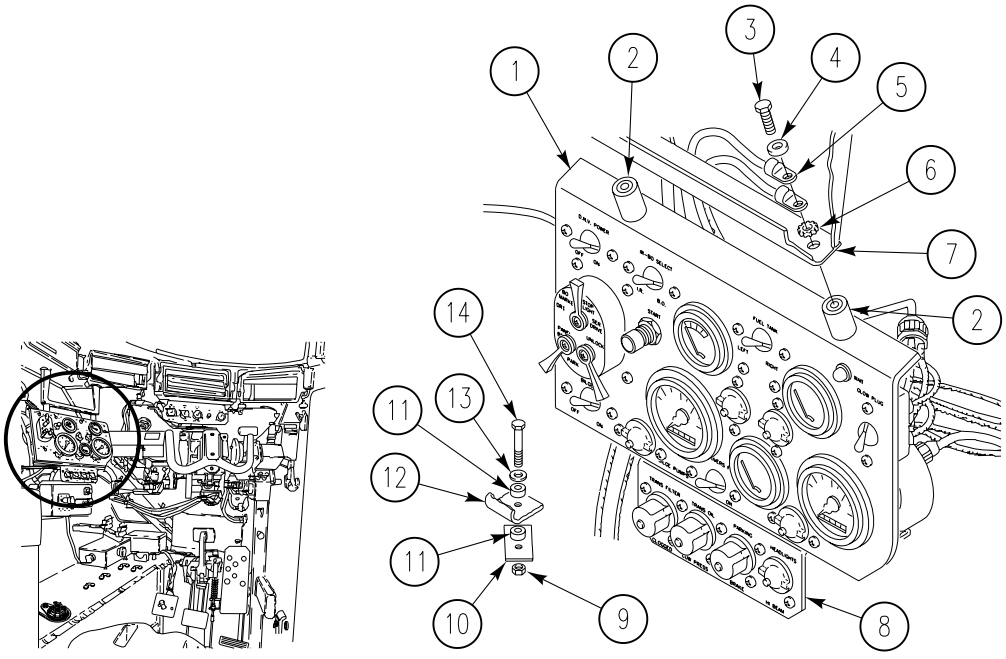

3. REMOVE SCREW (1), LOCKNUT (2), WASHER (3), AND TWO GROUND LEADS (4) AND (5) FROM STRUT. DISCARD LOCKNUT.

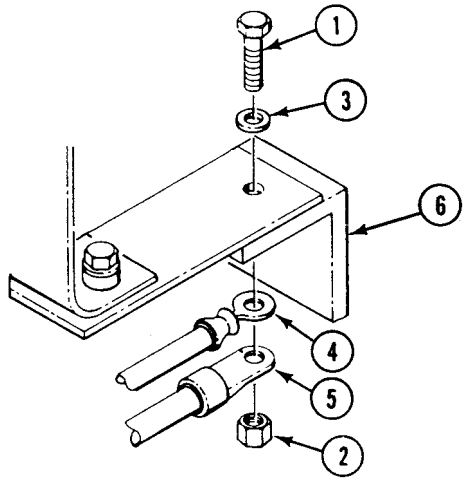

NOTE

Support instrument panel on two struts to gain access to rear of panel.

4. DISCONNECT CIRCUIT 40 LEAD (6) FROM INSTRUMENT PANEL WIRING HARNESS LEAD (7).
5. DISCONNECT CIRCUIT 27P LEAD (8) FROM INSTRUMENT PANEL WIRING HARNESS LEAD (9).
6. DISCONNECT CIRCUIT 323 LEAD (10) FROM TRANSMISSION FILTER CLOGGED INDICATOR (11) ON INSTRUMENT PANEL.

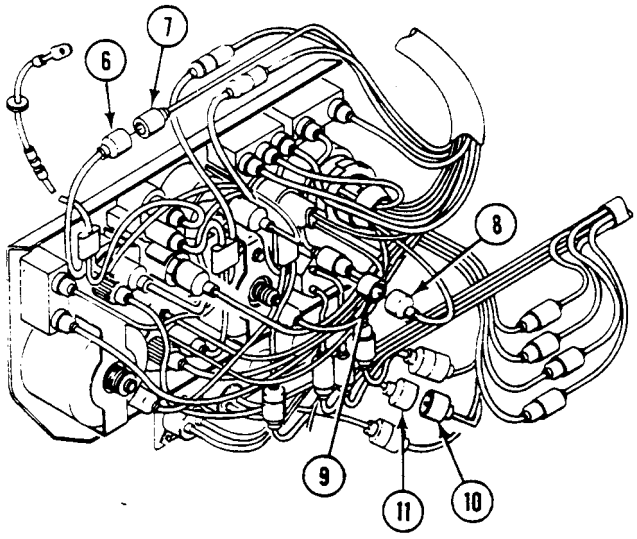

REPLACE TRANSMISSION CONTROLLER WIRING HARNESS — Continued **0188 00**

7. DISCONNECT CIRCUIT 366 LEAD (12) FROM FRONT MAIN WIRING HARNESS CIRCUIT 366 LEAD (13).

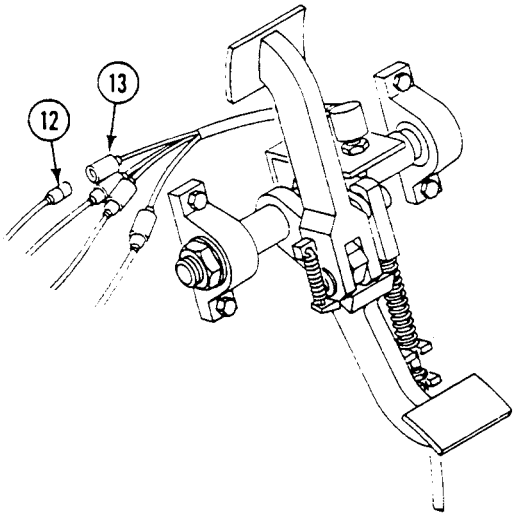

8. DISCONNECT CIRCUIT 14B LEAD (14) FROM FRONT MAIN WIRING HARNESS CIRCUIT 14 LEAD (15).

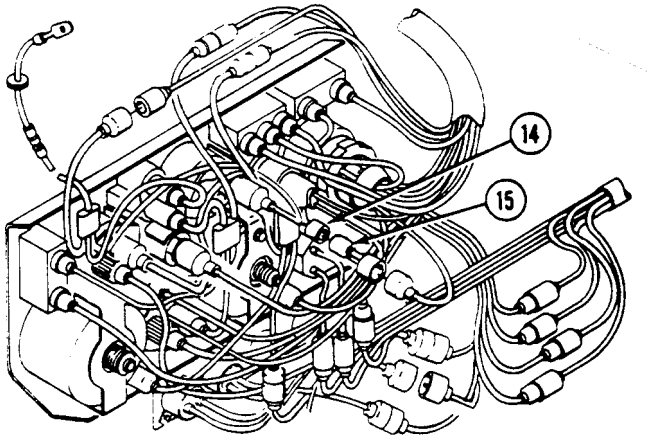

9. DISCONNECT CIRCUIT 368 LEAD (16) FROM STEERING LOCK SWITCH WIRING HARNESS LEAD (17).

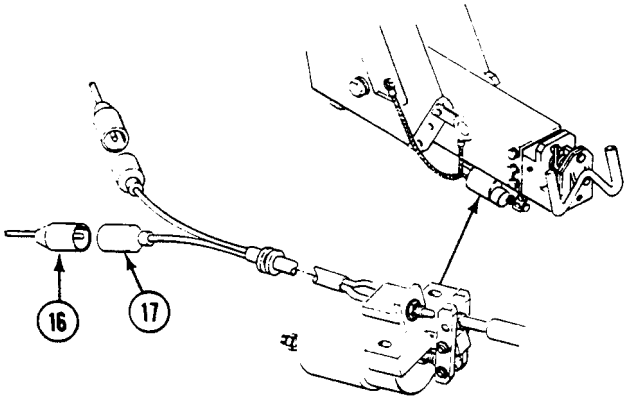

REPLACE TRANSMISSION CONTROLLER WIRING HARNESS — Continued 0188 00

10. REMOVE THREE SCREWS (1), LOCKWASHERS (2), CLAMPS (3), AND WIRING HARNESS (4) FROM DRIVER'S FRONT HULL. DISCARD LOCKWASHERS.

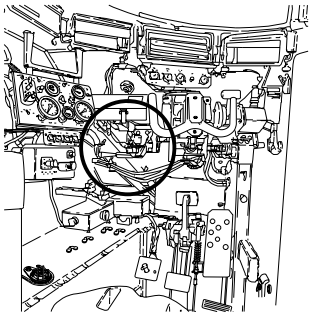

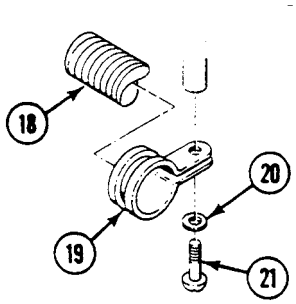

11. DISCONNECT WIRING HARNESS CONNECTOR (5) FROM TRANSMISSION CONTROL (6).

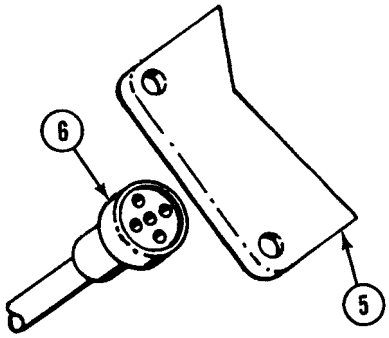

12. DISCONNECT TRANSMISSION WIRING HARNESS (7) FROM BULKHEAD CONNECTOR LOCATED INSIDE POWER PLANT COMPARTMENT.
13. REMOVE FOUR SCREWS (8), LOCKNUTS (9), AND CONNECTOR (10) FROM DRIVER'S COMPARTMENT BULKHEAD. HAVE HELPER ASSIST. DISCARD LOCKNUTS.
14. REMOVE TRANSMISSION CONTROLLER WIRING HARNESS (11).

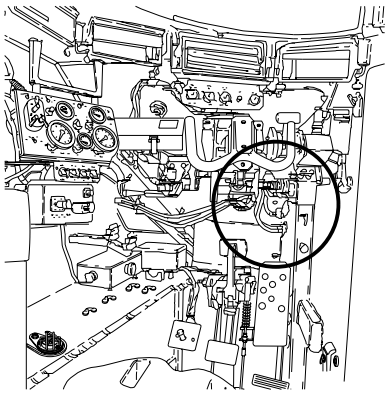

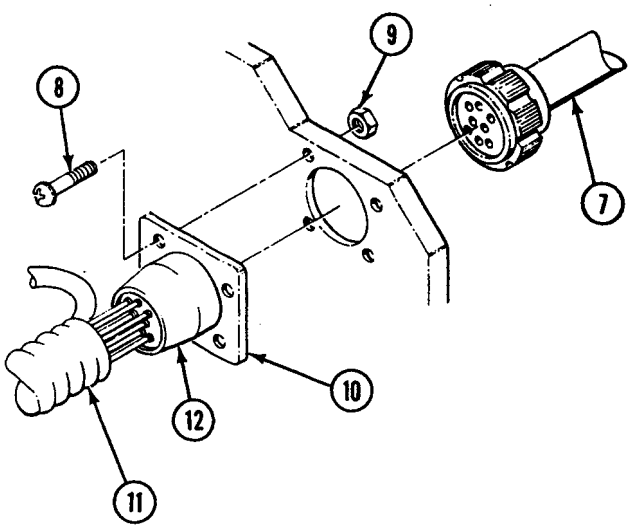

TEST AND INSPECTION

INSPECT AND REPAIR

1. CHECK HARNESS CONTINUITY. REPLACE BAD HARNESS.
2. CHECK LEADS. REPLACE FRAYED, CRACKED, OR BROKEN LEADS (WP 0189 00).
3. CHECK CONNECTORS. REPLACE CRACKED OR BROKEN CONNECTORS (WP 0189 00).

INSTALLATION

1. PLACE TRANSMISSION CONTROLLER WIRING HARNESS (11) IN POSITION NEAR MATING CONNECTORS.
2. INSTALL TRANSMISSION CONTROLLER WIRING HARNESS CONNECTOR (10), FOUR NEW LOCKNUTS (9), AND SCREWS (8) ON DRIVER'S COMPARTMENT BULKHEAD. HAVE HELPER ASSIST.
3. CONNECT TRANSMISSION WIRING HARNESS (7) TO BULKHEAD CONNECTOR LOCATED INSIDE POWER PLANT COMPARTMENT.

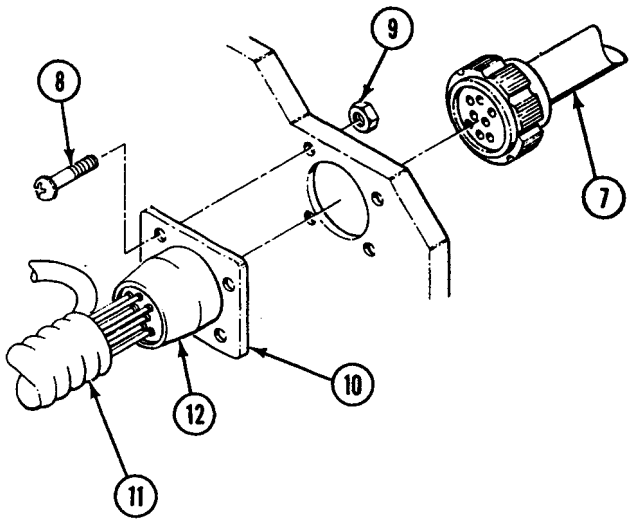

4. CONNECT WIRING HARNESS CONNECTOR (5) TO TRANSMISSION CONTROLLER (6).

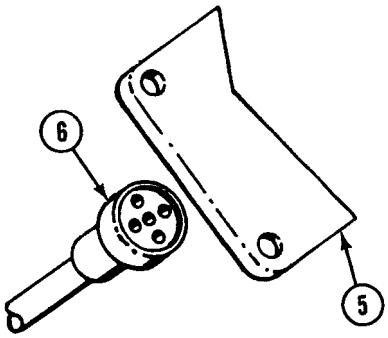

5. CONNECT CIRCUIT 368 LEAD (1) TO STEERING LOCK SWITCH WIRING HARNESS LEAD (2).

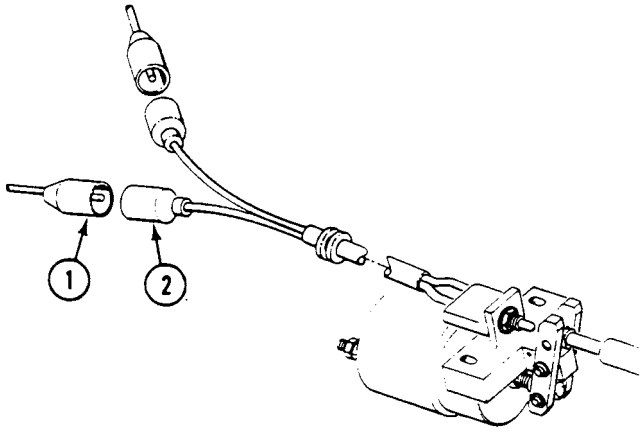

6. CONNECT CIRCUIT 14B LEAD (3) TO CIRCUIT 14 LEAD (4) ON FRONT MAIN WIRING HARNESS.

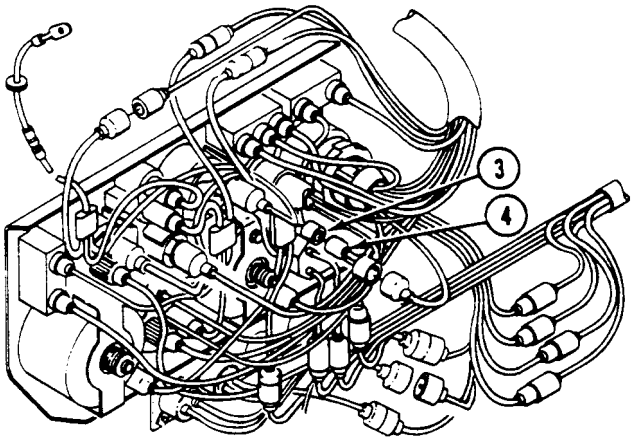

7. CONNECT CIRCUIT 366 LEAD (5) TO CIRCUIT 366 LEAD (6) ON FRONT MAIN WIRING HARNESS.

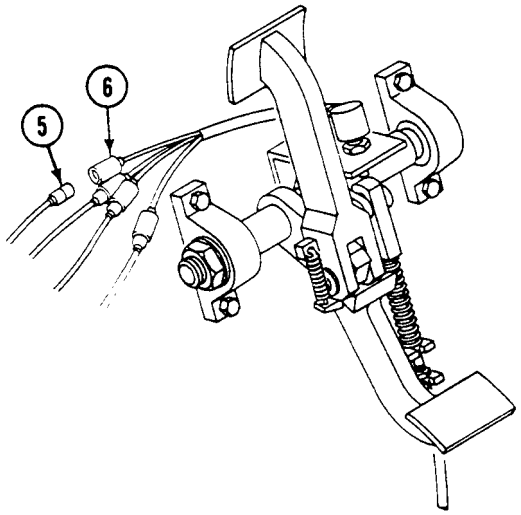

8. CONNECT CIRCUIT 323 LEAD (7) TO TRANSMISSION FILTER CLOGGED INDICATOR (8) ON INSTRUMENT PANEL.
9. CONNECT CIRCUIT 27P LEAD (9) TO INSTRUMENT PANEL WIRING HARNESS LEAD (10).
10. CONNECT CIRCUIT 40 LEAD (11) TO INSTRUMENT PANEL WIRING HARNESS LEAD (12).

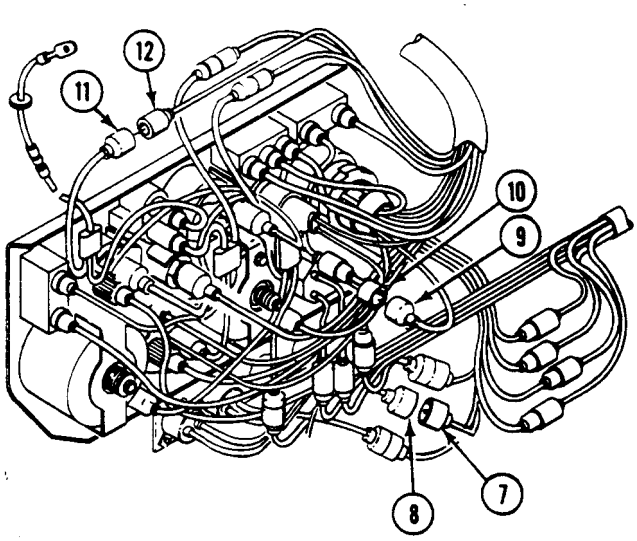

NOTE

Support instrument panel on two struts during installation of panel.

11. INSTALL TWO GROUND LEADS (1) AND (2), WASHER (3), SCREW (4), AND NEW LOCKNUT (5) ON STRUT.

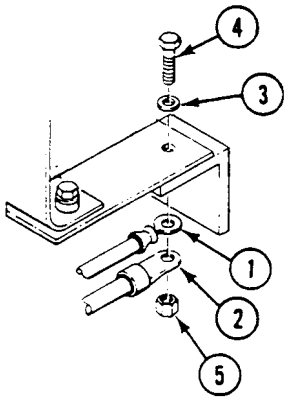

12. SUPPORT INSTRUMENT PANEL (1) ON TWO STRUTS (10). INSTALL GROUND LEAD (5) AND NEW LOCKWASHER (6) ON SUPPORT (7). INSTALL PANEL (1) WITH TWO MOUNTS (2) ON SUPPORT (7). SECURE WITH TWO WASHERS (4), AND SCREWS (3).
13. INSTALL INSTRUMENT PANEL (6) ON TWO STRUTS (12). SECURE WITH TWO NEW LOCKNUTS (13), MOUNTS (14) AND (15), WASHERS (16), AND SCREWS (17).

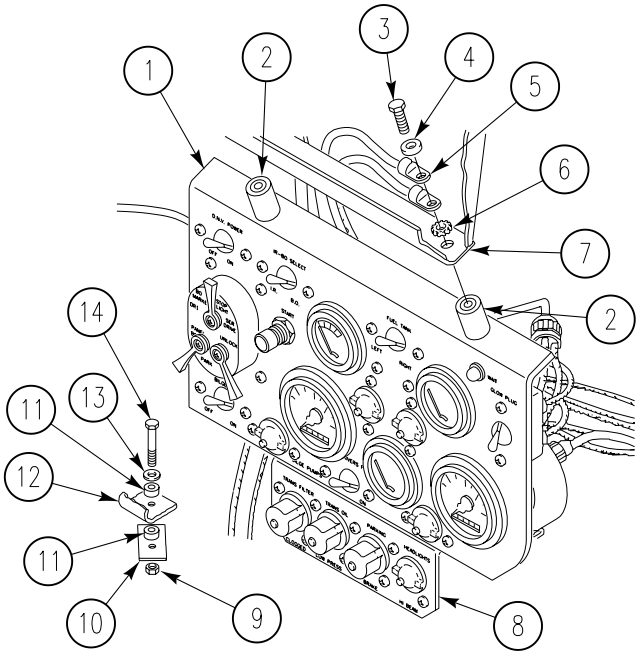

14. INSTALL WIRING HARNESS (18), THREE CLAMPS (19), NEW LOCKWASHERS (20), AND SCREWS (21) ON DRIVER'S FRONT HULL.

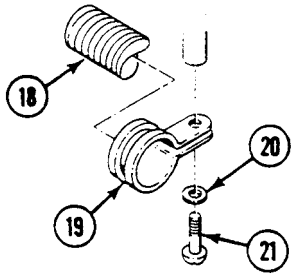

15. CONNECT BATTERY GROUND STRAP (WP 0237 00).
16. INSTALL DRIVER'S POWER PLANT ACCESS PANEL. See TM 9-2350-366-10-1.
17. INSTALL ENGINE ACCESS PANEL. See TM 9-2350-366-10-1.
18. INSTALL FRONT POWER PLANT ACCESS DOORS. See TM 9-2350-366-10-1.
19. START ENGINE. See TM 9-2350-366-10-1. CHECK THAT TRANSMISSION CONTROLLER WORKS RIGHT.
20. STOP ENGINE. See TM 9-2350-366-10-1.

END OF TASK

REPAIR WIRING HARNESS 0189 00

THIS WORK PACKAGE COVERS:

Disassembly (page 0189 00-1).
Assembly (page 0189 00-4).

INITIAL SETUP:

Maintenance Level

Unit

Personnel Required

Unit mechanic 63T10

Tools and Special Tools

General mechanic's tool kit (WP 0397 00, Item 64)
Electrical tool kit (WP 0397 00, Item 63)
Hacksaw frame (WP 0397 00, Item 23)
Electric gun heater (WP 0397 00, Item 25)
Soldering gun (WP 0397 00, Item 54)
Electric etcher (WP 0397 00, Item 20)

References

TM 9-2350-366-10-1

Materials/Parts

Hacksaw blade (WP 0399 00, Item 34)
Band markers (AR)
Pin (AR)
Socket (AR)
Terminal (AR)

Equipment Condition

Engine stopped (TM 9-2350-366-10-1)

Carrier blocked (TM 9-2350-366-10-1)

Battery ground strap disconnected (WP 0237 00).

DISASSEMBLY

1. REMOVE MALE CONNECTOR FROM HARNESS LEAD.
   a. Slide shell (3) back on lead (1).
   b. Clip contact pin (5) from lead (1). Discard pin.
   c. Remove washer (6) or slotted washer (4) and shell (3) from lead (1).
   d. Remove band marker (2) from lead (1). Discard band marker.

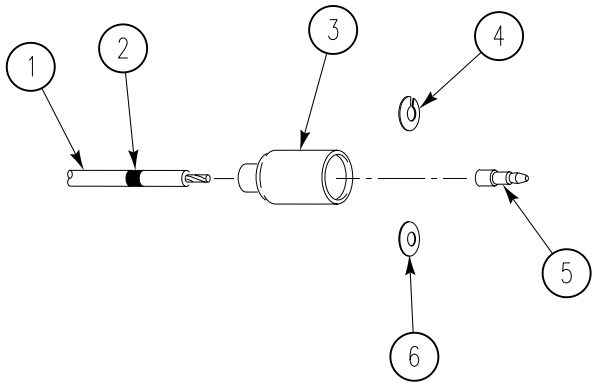

2. REMOVE FEMALE CONNECTOR FROM HARNESS LEAD.
   a. Slide shell (2) back on lead (1).
   b. Slide sleeve (3) back from contact socket (4).
   c. Clip socket (4) from lead (1). Discard socket.

d. Remove sleeve (3) and shell (2) from lead (1).

e. Remove band marker (5) from lead (1). Discard band marker.

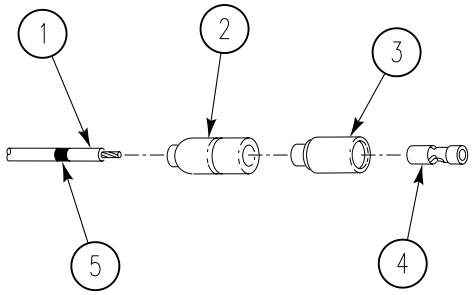

3. REMOVE TERMINAL CONNECTOR FROM HARNESS LEAD.

a. If lead (1) has nipple (3), slide nipple back on lead.

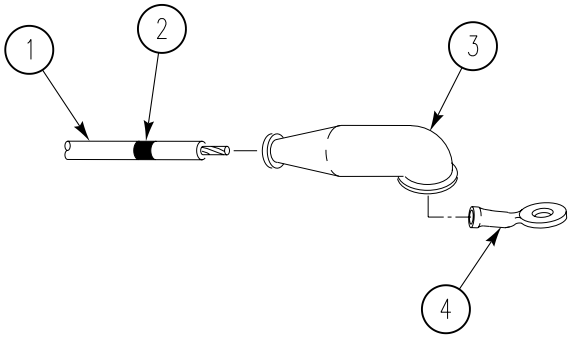

b. If lead (1) has insulated sleeving (2), cut and discard sleeving from lead.

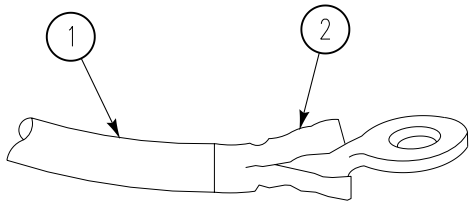

c. If lead (4) is of large diameter, place in vise (1). Cut lead with hacksaw as close as possible to terminal (3). Discard terminal.

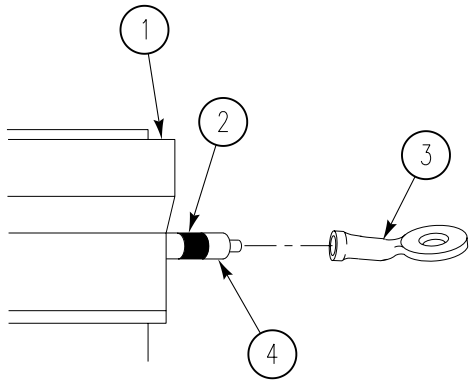

d. If lead (1) is of small diameter, cut lead as close as possible to terminal (3). Discard terminal.

e. Remove band marker (2) from lead (1). Discard band marker.

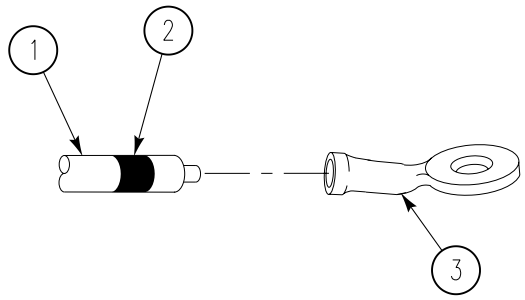

NOTE

Unit Maintenance can only repair multi- pin plugs with up to three sockets. For plugs with more than three sockets, notify your supervisor.

4. REMOVE MULTIPLE CONNECTORS THE SAME WAY AS SINGLE CONNECTORS. BE SURE TO TAG LEADS TO ENSURE CORRECT INSTALLATION. See Step 1 AND Step 2 ABOVE.

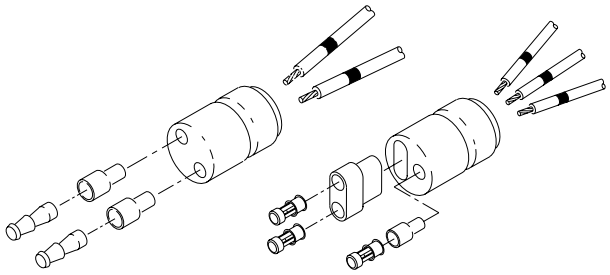

NOTE

For wiring harness repair, it may be necessary to remove Y-type adapters and dummy plugs.

5. REMOVE Y-TYPE ADAPTER OR DUMMY PLUG FROM HARNESS LEAD.

a. Pull harness leads (2) from Y-type adapter (3). Remove adapter.

b. Remove band markers (1) and (4) from leads (2). Discard band markers.

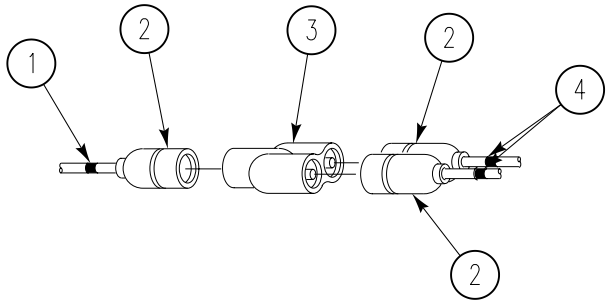

c. Pull dummy plug (1) from male or female connector (2).

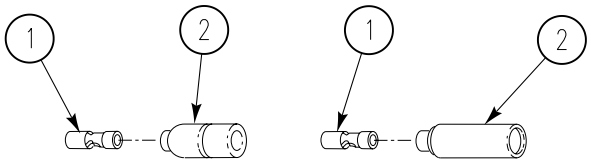

ASSEMBLY

CAUTION

Crimping lower part of pin may damage pin and it will not hold lead. Crimp only middle part of contact pin with correct size die.

NOTE

If replacing lead, cut new wire from bulk supply. Measure original length, gage, and type of wire.

New band markers will need to have circuit identification etched on them.

1. INSTALL MALE CONNECTOR ON HARNESS LEAD.
   a. Strip insulation from lead (1) to uncover just enough wire to fill contact pin well.
   b. Slide shell (3) and washer (6), if removed, over lead (1).
   c. Insert lead (1) into new pin (5) and crimp.
   d. If removed, place slotted washer (4) on lead (1) under pin (5) and pull shell (3) over washer (6) or (4) and pin.
   e. Add circuit number to new band marker (2). Use etcher. Install new band marker on lead (1).

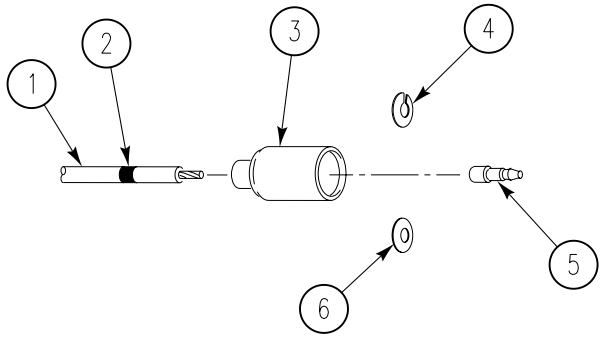

CAUTION

Crimping lower part of pin may damage pin and it will not hold lead. Crimp only middle part of contact pin with correct size die.

2. INSTALL FEMALE CONNECTOR ON HARNESS LEAD.
   a. Strip insulation from lead (1) to uncover just enough wire to fill contact socket well.
   b. Slide shell (2) and sleeve (3) over lead (1).
   c. Insert lead (1) in new socket (4) and crimp or solder.

d. Slide sleeve (3) and shell (2) over socket (4).

e. Add circuit number to new band marker (5). Use etcher. Install new band marker on lead (1).

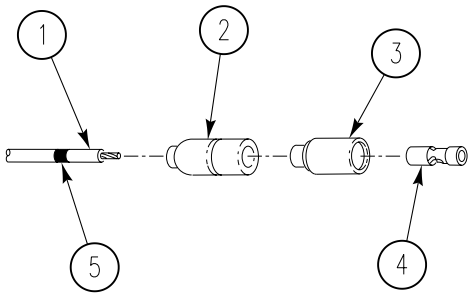

3. INSTALL TERMINAL CONNECTOR ON HARNESS LEAD.

a. If nipple (2) was removed from lead (1), strip insulation from lead to uncover just enough wire to fill barrel (3) of terminal (4). Slide nipple over lead.

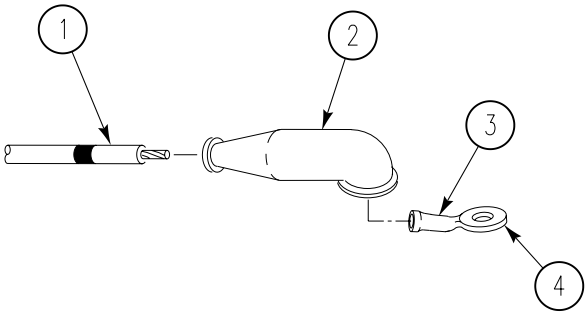

b. If insulated sleeving (14) was removed from lead (11), slide new insulated sleeving on lead. Strip insulation from lead to same length as barrel (12) on terminal (13).

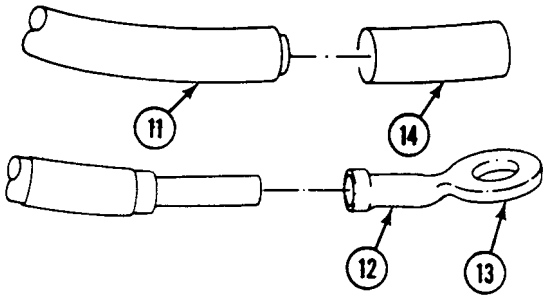

c. If lead (11) is large diameter, fill barrel (12) on terminal (13) with solder and flux. Insert lead into melted solder in terminal barrel. Allow to cool.

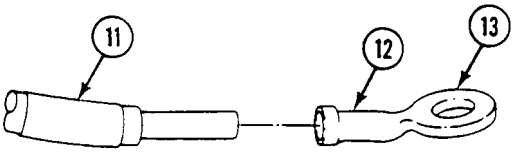

d. If lead (11) is small diameter, position terminal (13) on lead. Crimp terminal on lead.

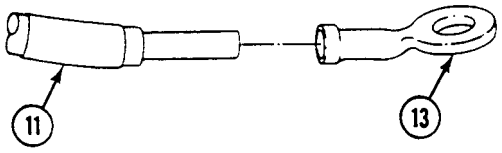

e. Heat shrink those leads with insulated sleeving (3) on terminal (4).

f. Add circuit number to new band marker (2). Use etcher. Install new band marker on lead (1).

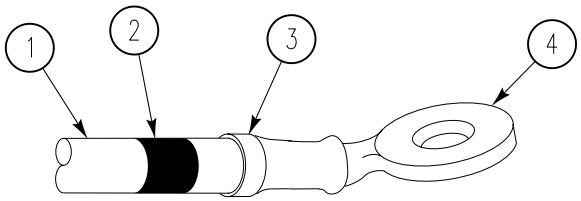

4. INSTALL MULTIPLE CONNECTORS THE SAME WAY AS SINGLE CONNECTORS. See Step 1 AND Step 2 ABOVE.

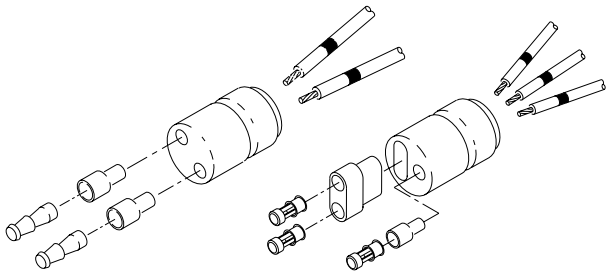

5. IF REMOVED, INSTALL Y-TYPE ADAPTERS AND DUMMY PLUGS.

a. Install Y-type adapter (3) on harness leads (2).

b. Add circuit number to new band markers (1) and (4). Use etcher. Install new band markers on leads (2).

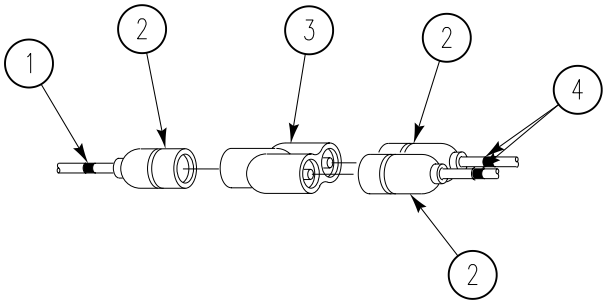

c. Install dummy plugs (1) in male or female connector (2).

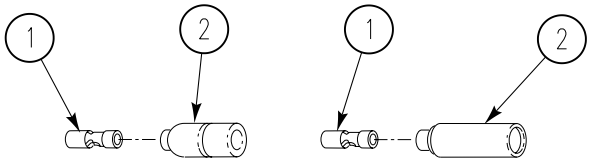

6. CONNECT BATTERY GROUND STRAP (WP 0237 00).
7. TURN MASTER SWITCH TO ON. See TM 9-2350-366-10-1.
8. CHECK FOR PROPER WIRING HARNESS REPAIR.
9. TURN MASTER SWITCH TO OFF. See TM 9-2350-366-10-1.

END OF TASK

REPLACE TRANSMISSION WIRING HARNESS 0190 00

THIS WORK PACKAGE COVERS:

Removal (page 0190 00-1).
Inspect and Repair (page 0190 00-2).
Installation (page 0190 00-2).

INITIAL SETUP:

Maintenance Level
Unit

Tools and Special Tools
General mechanic's tool kit (WP 0397 00, Item 64)
Multimeter (WP 0397 00, Item 30)

Materials/Parts
Locknut (4)

Personnel Required
Unit mechanic 63T10

References
TM 9-2350-366-10-1

Equipment Condition
Engine stopped (TM 9-2350-366-10-1)
Vehicle blocked (TM 9-2350-366-10-1)
Engine access cover plate removed (WP 0308 00)
Front power plant access doors removed (TM 9-2350-366-10-1)

REMOVAL

1. DISCONNECT TRANSMISSION WIRING HARNESS CONNECTOR (1) FROM BULKHEAD CONNECTOR (2).

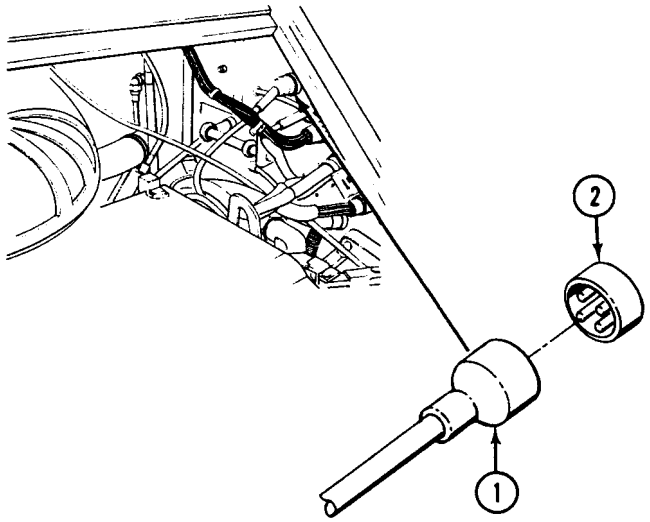

2. DISCONNECT CIRCUIT 366 LEAD (3) FROM TRANSMISSION LOW OIL LEVEL PRESSURE SWITCH (4).
3. DISCONNECT WIRING HARNESS CONNECTOR (5) FROM TRANSMISSION CONNECTOR (6).
4. DISCONNECT CIRCUIT 323 CONNECTOR (7) FROM DIFFERENTIAL PRESSURE SWITCH (8).
5. REMOVE FOUR SCREWS (9), EIGHT WASHERS (10), FOUR LOCKNUTS (11), AND FOUR CLAMPS (12) FROM BRACKETS AND WIRING HARNESS (13). DISCARD LOCKNUTS.

6. REMOVE WIRING HARNESS (13) FROM TRANSMISSION.

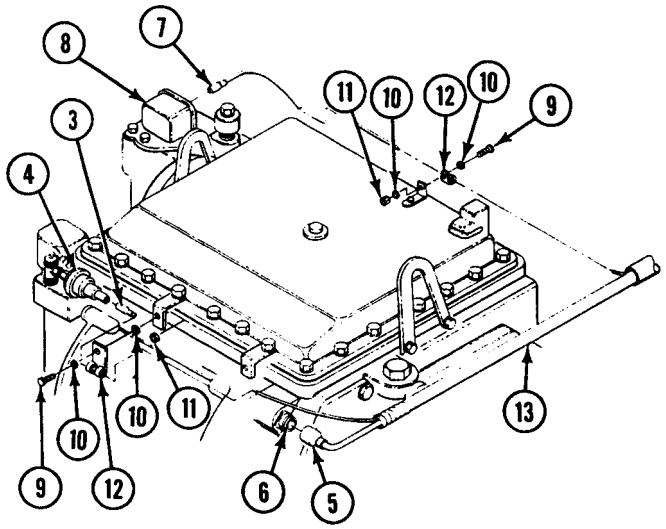

TEST AND INSPECTION

INSPECT AND REPAIR

1. CHECK LEADS FOR CONTINUITY. REPLACE BAD LEADS.
2. CHECK CONNECTORS AND TERMINALS. REPAIR BAD CONNECTORS OR TERMINALS (WP 0189 00).

INSTALLATION

1. PLACE NEW WIRING HARNESS (13) ON TRANSMISSION.
2. CONNECT CIRCUIT 323 CONNECTOR (7) TO DIFFERENTIAL PRESSURE SWITCH (8).
3. CONNECT WIRING HARNESS CONNECTOR (5) TO TRANSMISSION CONNECTOR (6).
4. CONNECT CIRCUIT 366 LEAD (3) TO TRANSMISSION LOW OIL PRESSURE SWITCH (4).

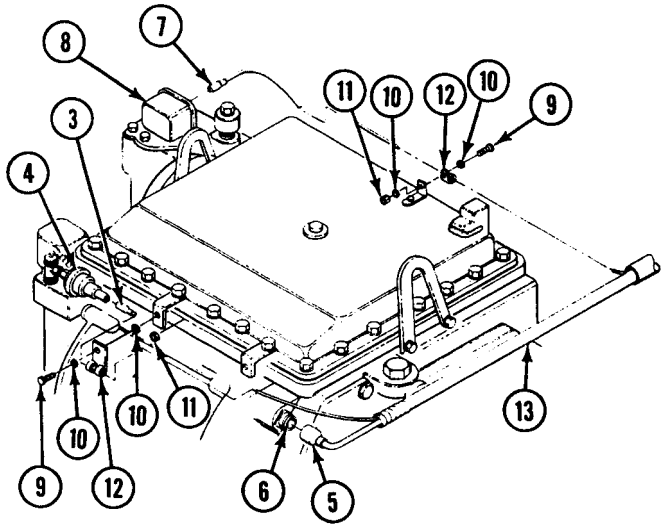

5. CONNECT TRANSMISSION WIRING HARNESS CONNECTOR (1) TO BULKHEAD CONNECTOR (2).

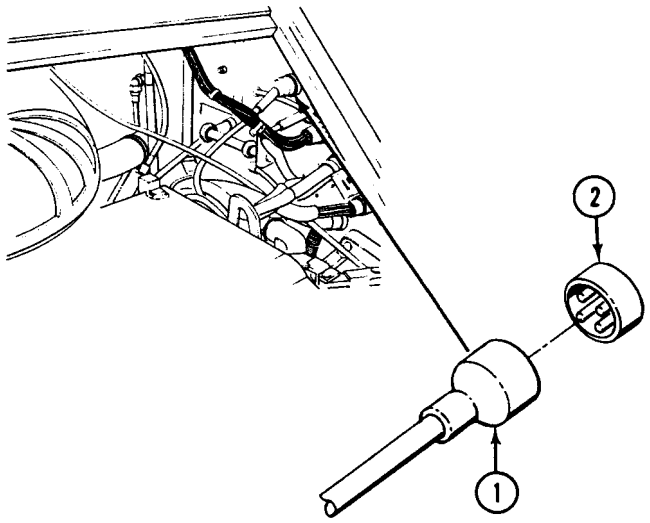

6. INSTALL WIRING HARNESS (13) IN FOUR CLAMPS (12), AND BRACKETS WITH FOUR SCREWS (9), EIGHT WASHERS (10), AND FOUR NEW LOCKNUTS (11).

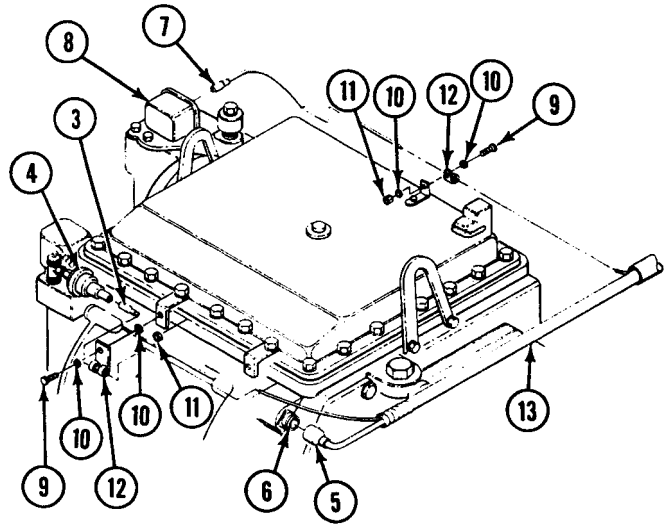

7. INSTALL ENGINE ACCESS COVER PLATE (WP 0308 00).

8. INSTALL FRONT POWER PLANT ACCESS DOORS. See TM 9-2350-366-10-1.

END OF TASK

REPLACE ENGINE WIRING HARNESS 0191 00

THIS WORK PACKAGE COVERS:

Removal (page 0191 00-1).
Clean, Inspect, and Repair (page 0191 00-6).
Installation (page 0191 00-6).

INITIAL SETUP:

Maintenance Level

Unit

Tools and Special Tools

General mechanic's tool kit (WP 0397 00, Item 64)
Electrical tool kit (WP 0397 00, Item 63)
Multimeter (WP 0397 00, Item 30)

Materials/Parts

Locknut (2)
Lockwasher (3)
Tie strap (3)
Tie strap

Personnel Required

Unit Mechanic 63T10

References

TM 9-2350-366-10-1

Equipment Condition

Engine stopped (TM 9-2350-366-10-1)
Vehicle blocked (TM 9-2350-366-10-1)
Power plant removed (WP 0106 00)
Front power plant access doors removed (TM 9-2350-366-10-1)

REMOVAL

1. DISCONNECT LEAD (3) FROM TRANSMISSION HIGH OIL TEMPERATURE SWITCH (4).

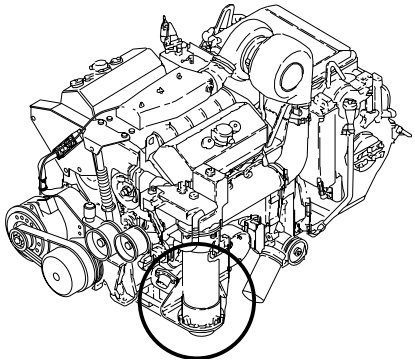

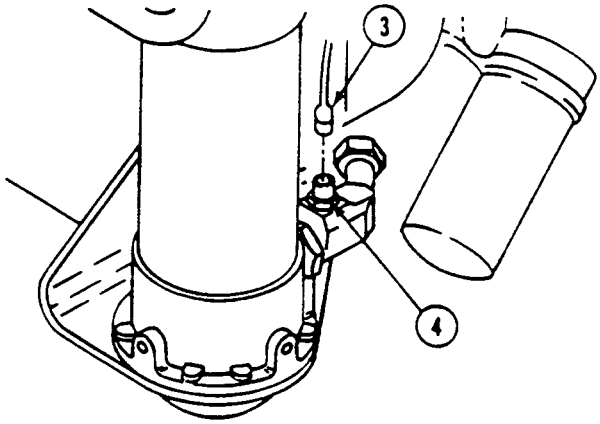

2. DISCONNECT LEAD (1) FROM COOLANT TEMPERATURE SENDING UNIT (2).

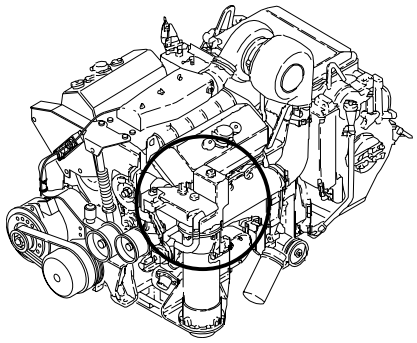

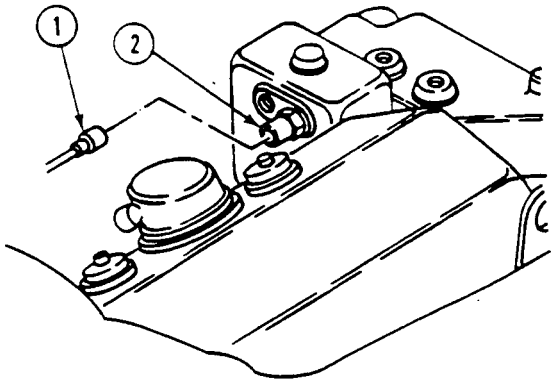

3. REMOVE SCREW (1), LOCKWASHER (2), GROUND LEAD (3), AND CLAMP (4) FROM BRACKET (5). DISCARD LOCKWASHER.
4. DISCONNECT LEAD (6) FROM RECEPTACLE (7). REMOVE CLAMP (4) FROM LEAD.
5. REMOVE TIE STRAP (8) FROM LEAD (9) AND BRACKET (5). DISCARD TIE STRAP.

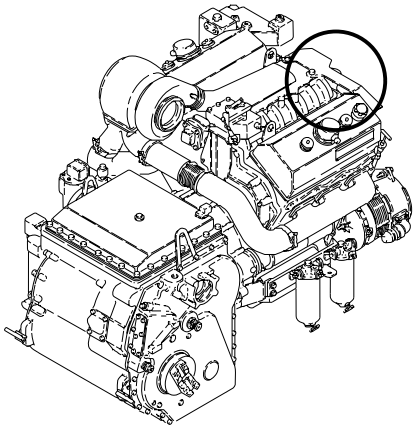

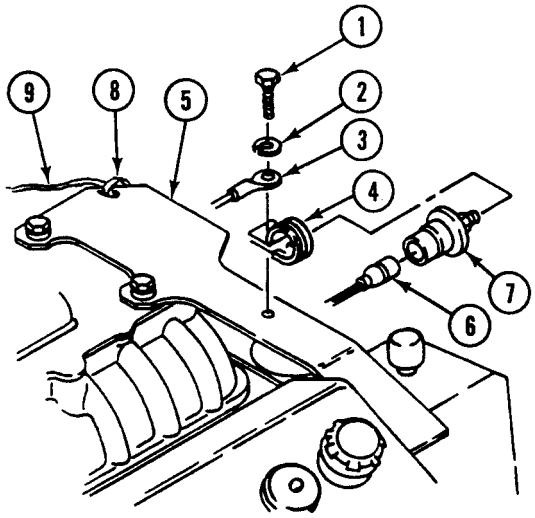

REPLACE ENGINE WIRING HARNESS — Continued **0191 00**

6. REMOVE TIE STRAP (15) FROM LEAD (12). DISCARD STRAP.
7. DISCONNECT CANNON PLUG (12) FROM GENERATOR (13). IF STE/ICE SYSTEM IS INSTALLED, DISCONNECT TWO GROUND LEADS (14).
8. DISCONNECT TWO STE/ICE LEADS (16), (17) FROM GENERATOR MAIN CABLE (18).

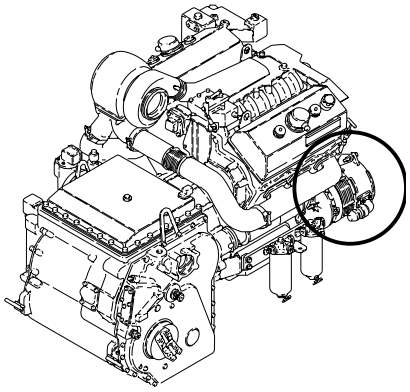

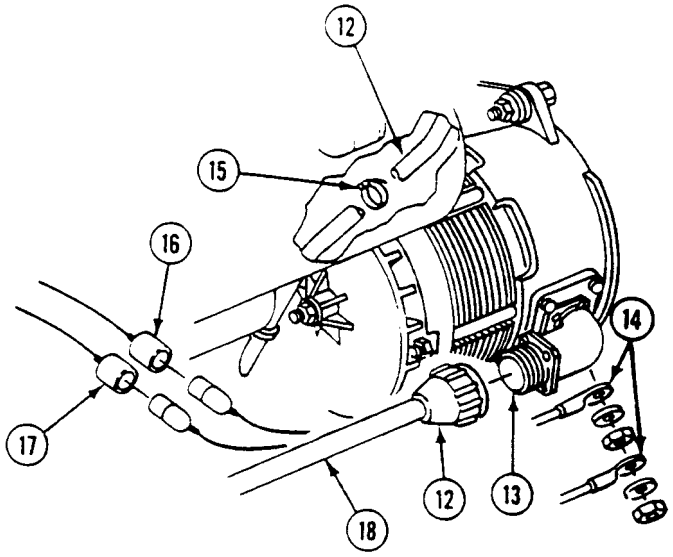

9. REMOVE NUT (10), LOCKWASHER (11), AND TWO LEADS (7) FROM STARTER SOLENOID (8). DISCARD LOCKWASHER.

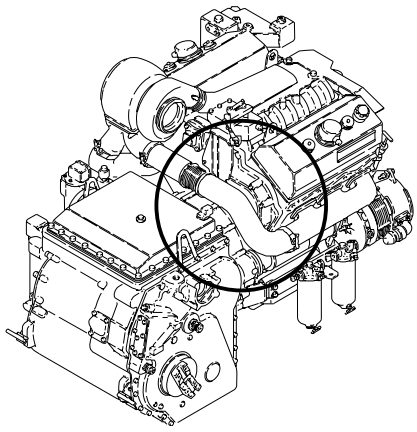

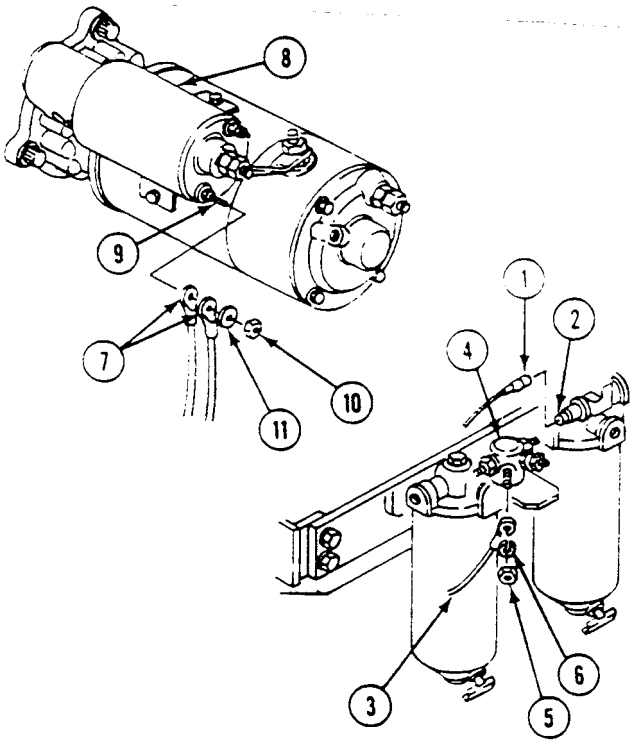

10. REMOVE NUT (5), LOCKWASHER (6), AND LEAD (3) FROM STARTER RELAY (4). DISCARD LOCKWASHER.
11. DISCONNECT LEAD (1) FROM PRESSURE SWITCH (2).

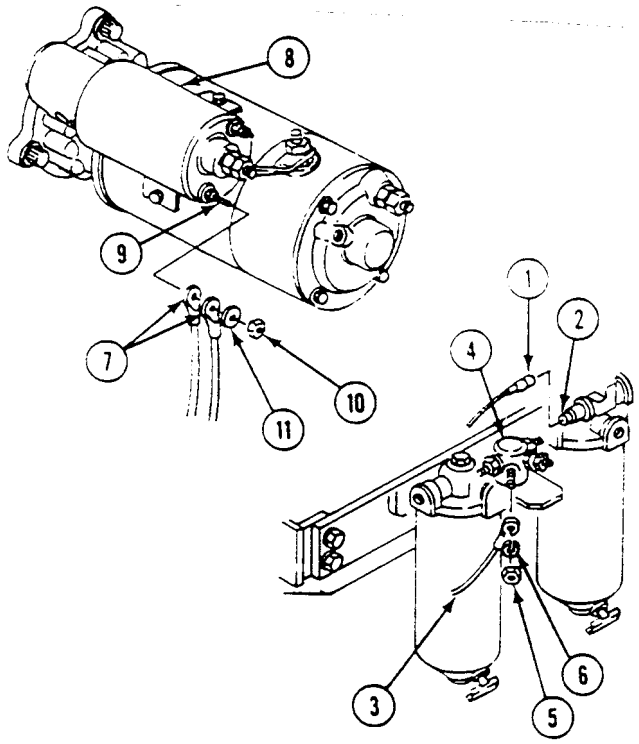

REPLACE ENGINE WIRING HARNESS — Continued **0191 00**

12. REMOVE LOCKNUT (13), WASHER (12), SCREW (11), AND CLAMP (9) FROM FILTER BRACKET (10). REMOVE CLAMP FROM HARNESS (3). DISCARD LOCKNUT.
13. REMOVE LOCKNUT (8), WASHER (7), SCREW (6), AND CLAMP (4) FROM BRACKET (5). REMOVE CLAMP FROM HARNESS (3). DISCARD LOCKNUT.
14. REMOVE TWO STRAPS (15) SECURING HARNESS (3) TO TRANSMISSION OIL LINE (14). DISCARD STRAPS.

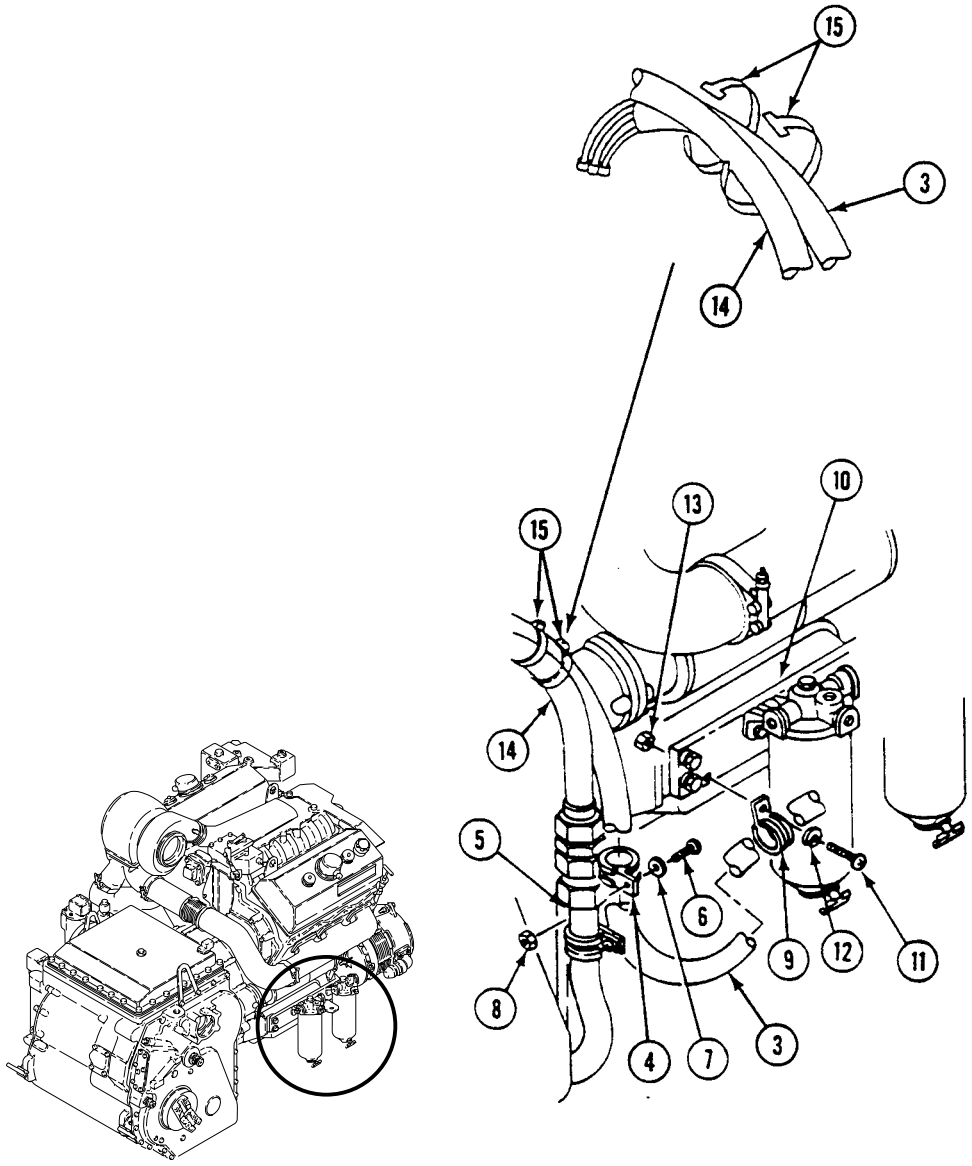

15. DISCONNECT LEAD (1) FROM OIL PRESSURE TRANSMITTER (2), AND REMOVE HARNESS (3) FROM POWER PLANT.

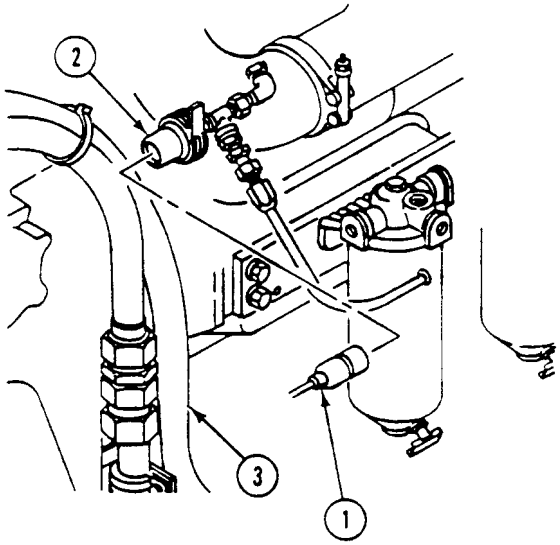

CLEANING

CLEAN, INSPECT, AND REPAIR

1. CHECK HARNESS FOR CONTINUITY.
2. CHECK LEADS. REPLACE FRAYED, CRACKED, OR BROKEN LEADS (WP 0230 00).
3. CHECK CONNECTORS. REPLACE FRAYED, CRACKED, OR BROKEN LEADS (WP 0230 00).

INSTALLATION

1. CONNECT LEAD (1) TO OIL PRESSURE TRANSMITTER (2).

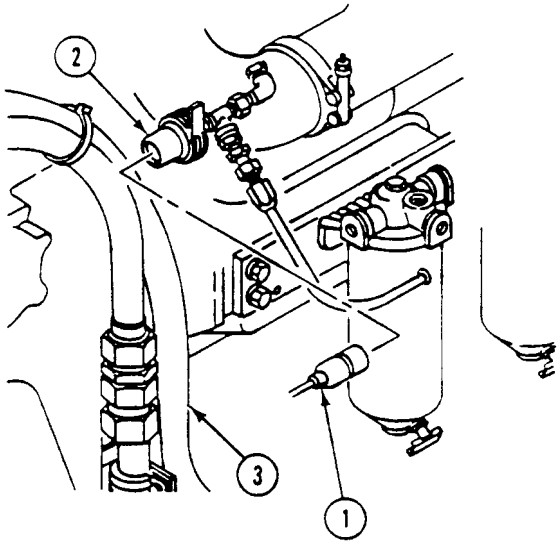

REPLACE ENGINE WIRING HARNESS — Continued **0191 00**

2. INSTALL CLAMP (4) ON HARNESS (3). SECURE CLAMP TO BRACKET (5) WITH SCREW (6), WASHER (7), AND NEW LOCKNUT (8).
3. INSTALL CLAMP (9) ON HARNESS (3). SECURE CLAMP TO FILTER BRACKET (10) WITH SCREW (11), WASHER (12), AND NEW LOCKNUT (13).
4. SECURE HARNESS (3) TO TRANSMISSION OIL LINE (14) WITH TWO NEW STRAPS (15).

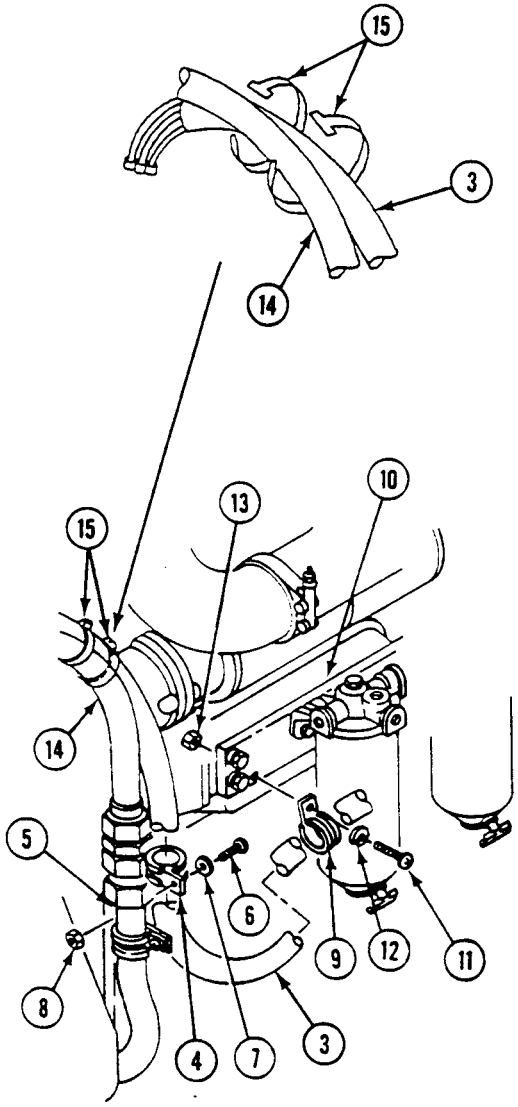

REPLACE ENGINE WIRING HARNESS — Continued **0191 00**

5. CONNECT LEAD (1) TO PRESSURE SWITCH (2).
6. INSTALL LEAD (3) ON STARTER RELAY (4) TERMINAL. SECURE WITH NUT (5) AND NEW LOCKWASHER (6).
7. INSTALL TWO LEADS (7) ON STARTER SOLENOID (8) TERMINAL (9) WITH NUT (10) AND NEW LOCKWASHER (11).

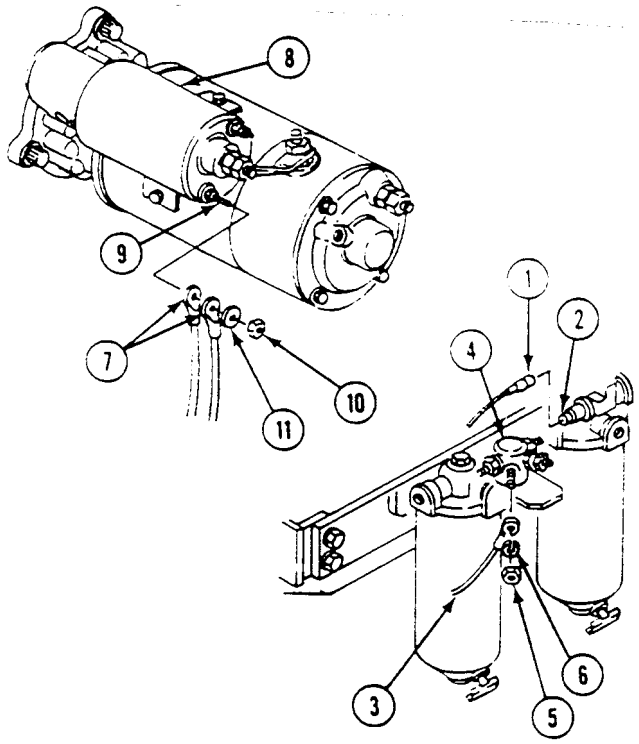

8. CONNECT LEAD (12) TO GENERATOR (13). IF STE/ICE SYSTEM WAS INSTALLED, RECONNECT TWO GROUND LEADS (14).
9. INSTALL NEW TIE STRAP (15) ON LEAD (12).
10. CONNECT TWO STE/ICE LEADS (16), (17) TO GENERATOR MAIN CABLE (18).

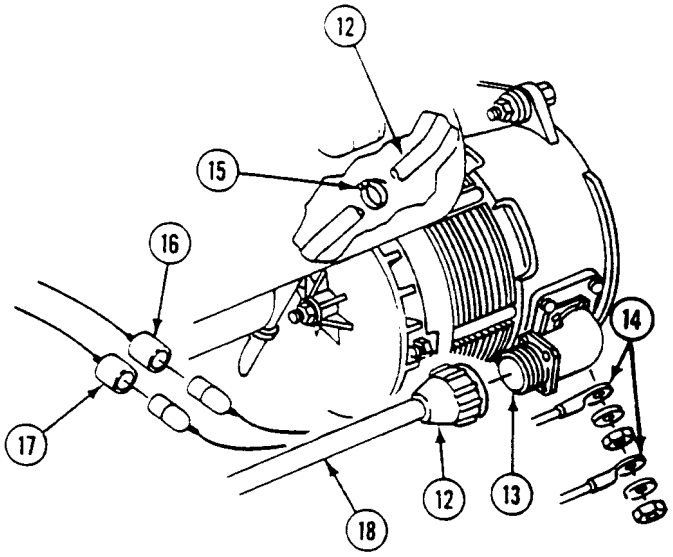

11. INSTALL CLAMP (19) ON LEAD (20). CONNECT LEAD TO RECEPTACLE (21).
12. INSTALL GROUND LEAD (22) AND CLAMP (19) ON BRACKET (23). SECURE WITH SCREW (24) AND NEW LOCKWASHER (25).

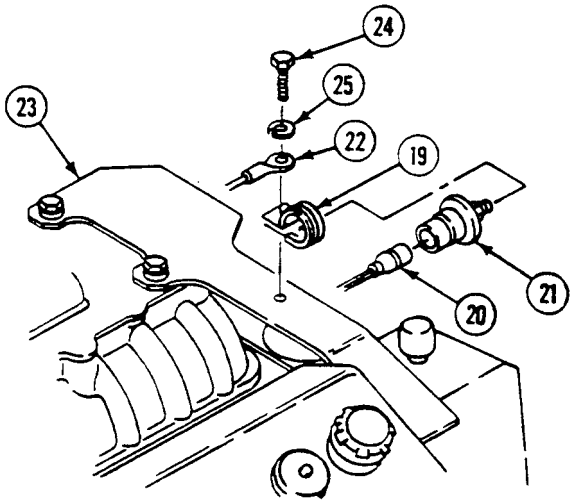

13. CONNECT LEAD (1) TO COOLANT TEMPERATURE SENDING UNIT (2).

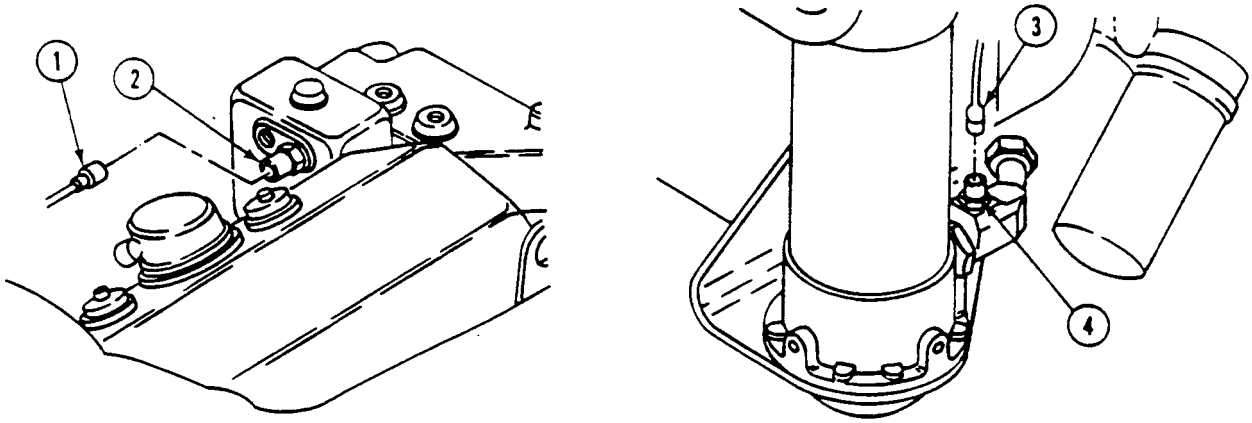

14. CONNECT LEAD (3) ON TRANSMISSION HIGH OIL TEMPERATURE SWITCH (4).
15. INSTALL LEAD (9) ON BRACKET (5) WITH NEW TIE STRAP (8).

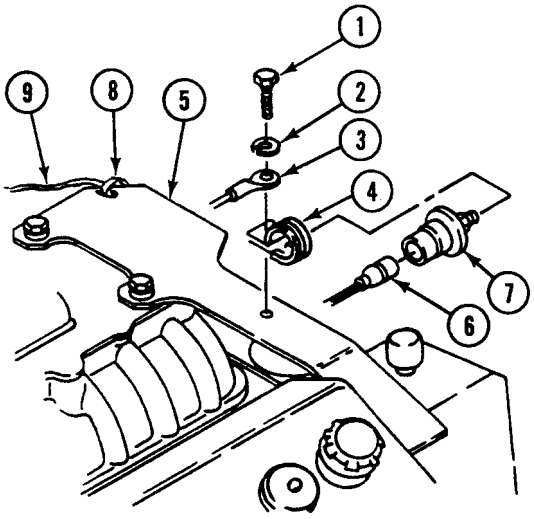

16. INSTALL POWER PLANT (WP 0106 00).
17. INSTALL FRONT POWER PLANT ACCESS DOORS. See TM 9-2350-366-10-1.

END OF TASK

CHAPTER 13

UNIT MAINTENANCE INSTRUCTIONS FOR DISTRIBUTION BOX

WORK PACKAGE INDEX

Title	Sequence No.
REPLACE MASTER SWITCH TO DISTRIBUTION BOX LEAD (CIRCUIT 49)	0192 00
REPAIR DISTRIBUTION BOX	0193 00
REPLACE DISTRIBUTION BOX ASSEMBLY	0194 00

REPLACE MASTER SWITCH TO DISTRIBUTION BOX LEAD (CIRCUIT 49) 0192 00

THIS WORK PACKAGE COVERS:

Removal (page 0192 00-1).
Installation (page 0192 00-3).

INITIAL SETUP:

Maintenance Level

Unit

Personnel Required

Unit Mechanic 63T10

Tools and Special Tools

General Mechanic's Tool Kit (WP 0397 00, Item 64)
Multimeter (WP 0397 00, Item 30)

References

TM 9-2350-366-10-1

Materials/Parts

Grommet (2)
Locknut (8)
Lockwasher
Lockwasher

Equipment Condition

Engine stopped (TM 9-2350-366-10-1)
Carrier blocked (TM 9-2350-366-10-1)
Battery ground lead disconnected (WP 0237 00)
Instrument warning light panel removed (WP 0217 00)

REMOVAL

1. REMOVE EIGHT LOCKNUTS (1), WASHERS (2), SCREWS (3), AND MASTER SWITCH PANEL (4) FROM DISTRIBUTION BOX (5). DISCARD LOCKNUTS.

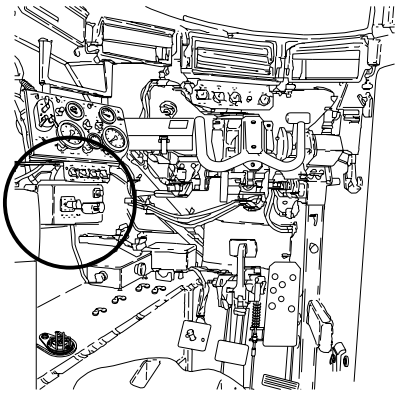

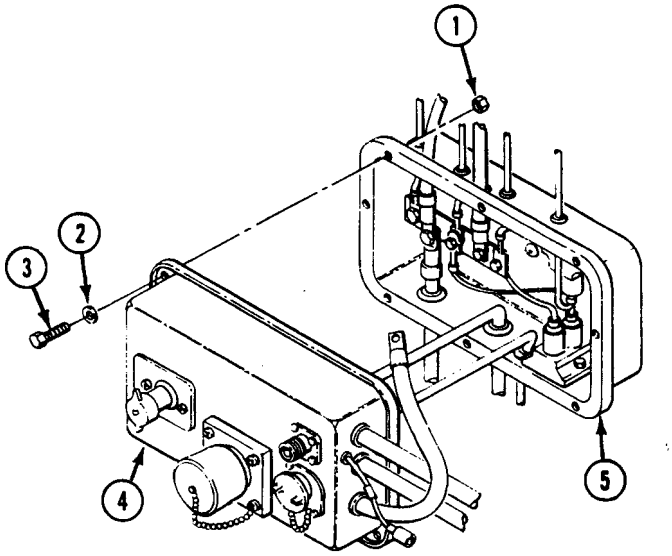

2. REMOVE NUT (6), LOCKWASHER (7), CIRCUIT 49 LEAD (8), AND CIRCUIT 50 LEAD (9) FROM MASTER SWITCH TERMINAL (10). DISCARD LOCKWASHER.

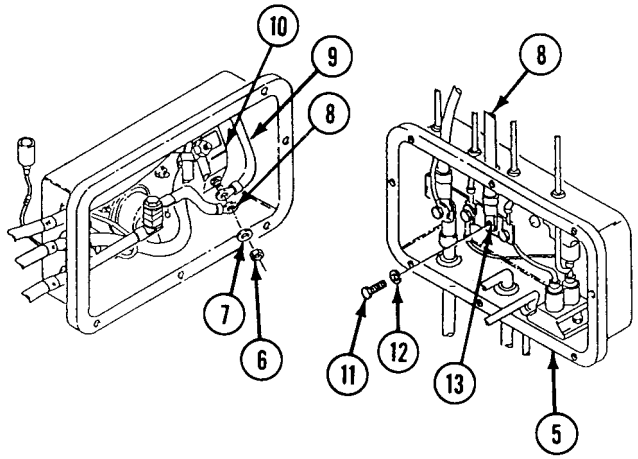

3. REMOVE SCREW (11), LOCKWASHER (12), AND CIRCUIT 49 LEAD (8) FROM BUS BAR (13) OF DISTRIBUTION BOX (5). DISCARD LOCKWASHER.

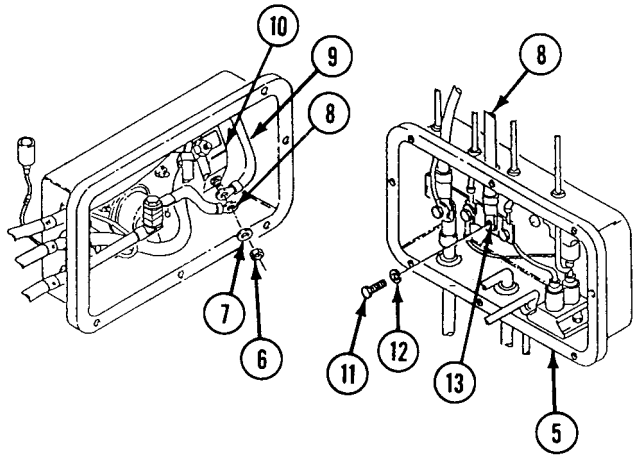

4. REMOVE CIRCUIT 49 LEAD (1) WITH TWO GROMMETS (2) FROM MASTER SWITCH PANEL (3) AND DISTRIBUTION BOX (4). DISCARD GROMMETS.

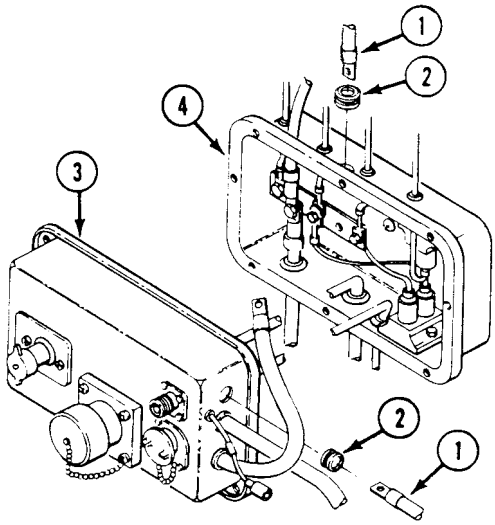

5. CHECK CIRCUIT 49 LEAD FOR CONTINUITY. REPLACE BAD LEAD.

INSTALLATION

1. INSTALL TWO GROMMETS (2) ON CIRCUIT 49 LEAD (1).

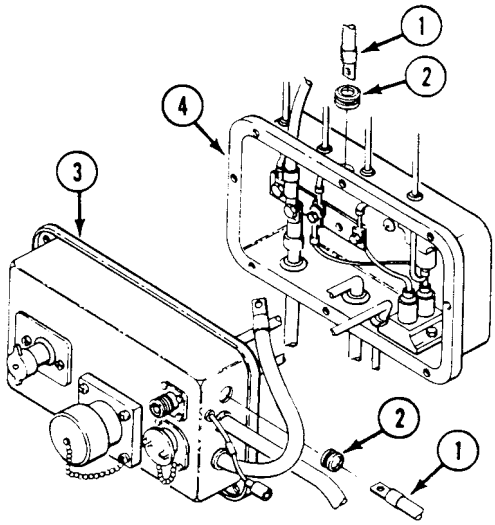

2. ROUTE CIRCUIT 49 LEAD (1) THROUGH DISTRIBUTION BOX (4) AND MASTER SWITCH PANEL (3). INSTALL GROMMETS (2) IN BOX AND PANEL.

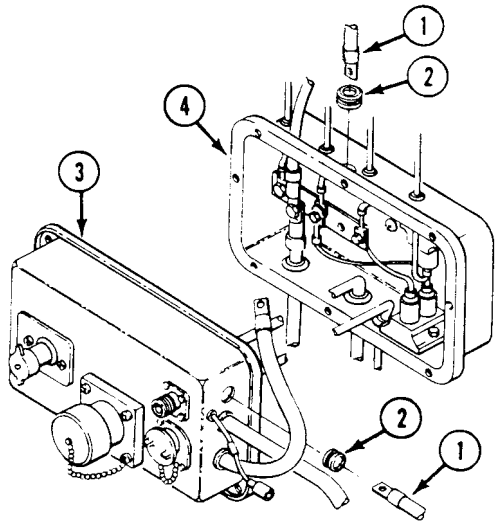

3. INSTALL CIRCUIT 49 LEAD (9) ON BUS BAR (13) OF DISTRIBUTION BOX (5). SECURE WITH NEW LOCKWASHER (12) AND SCREW (11).

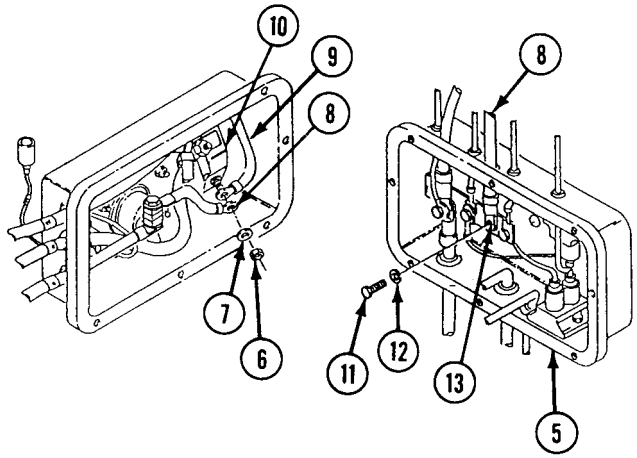

4. INSTALL CIRCUIT 49 LEAD (9) AND CIRCUIT 50 LEAD (8) ON MASTER SWITCH TERMINAL (10). SECURE WITH NUT (6) AND NEW LOCKWASHER (7).

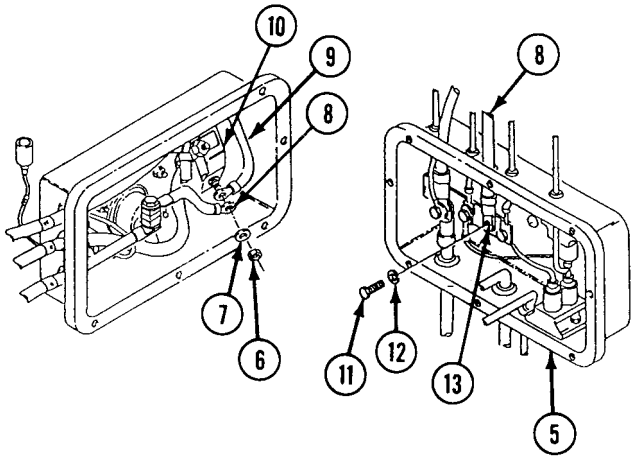

5. INSTALL MASTER SWITCH PANEL (4) ON DISTRIBUTION BOX (5). SECURE WITH EIGHT SCREWS (3), WASHERS (2), AND NEW LOCKNUTS (1).

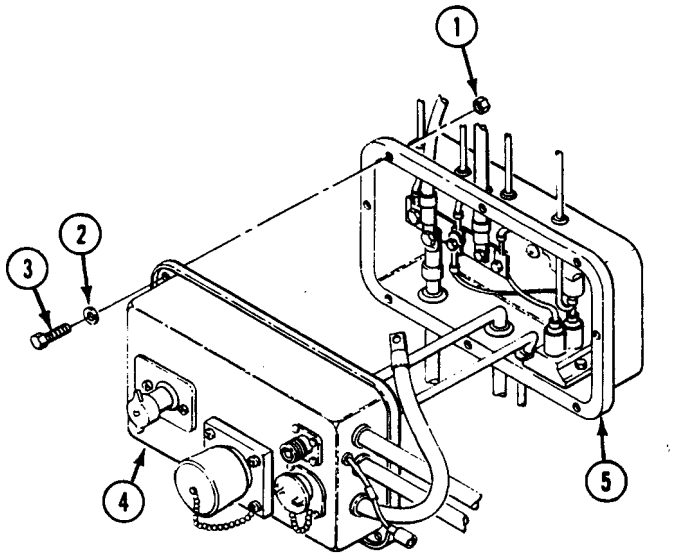

6. INSTALL INSTRUMENT WARNING LIGHT PANEL (WP 0269 00).

7. CONNECT BATTERY GROUND STRAP (WP 0237 00).

8. TURN MASTER SWITCH ON. See TM 9-2350-366-10-1.

9. CHECK THAT MASTER SWITCH ON INDICATOR LIGHT COMES ON. See TM 9-2350-366-10-1.

10. TURN MASTER SWITCH OFF. See TM 9-2350-366-10-1.

END OF TASK

REPAIR DISTRIBUTION BOX 0193 00

THIS WORK PACKAGE COVERS:

Removal (page 0193 00-1).
Installation (page 0193 00-4).

INITIAL SETUP:

Maintenance Level

Unit

Tools and Special Tools

General Mechanic's Tool Kit (WP 0397 00, Item 64)

Materials/Parts

Adhesive sealant (WP 0399 00, Item 4)
Gasket
Locknut (4)
Lockwasher (2)
Lockwasher (2)
Lockwasher (4)
Lockwasher (5)

Personnel Required

Unit Mechanic 63T10

References

TM 9-2350-366-10-1

Equipment Condition

Engine stopped (TM 9-2350-366-10-1)
Vehicle blocked (TM 9-2350-366-10-1)
Battery ground lead disconnected (WP 0237 00)
Master switch panel assembly removed (WP 0246 00)

REMOVAL

1. REMOVE SCREW (17) LOCKWASHER (18), CIRCUIT LEADS 6 (14), 6A (15), 6L (12), AND TWO GROMMETS (13), (15) FROM DISTRIBUTION BOX (5). DISCARD LOCKWASHER.

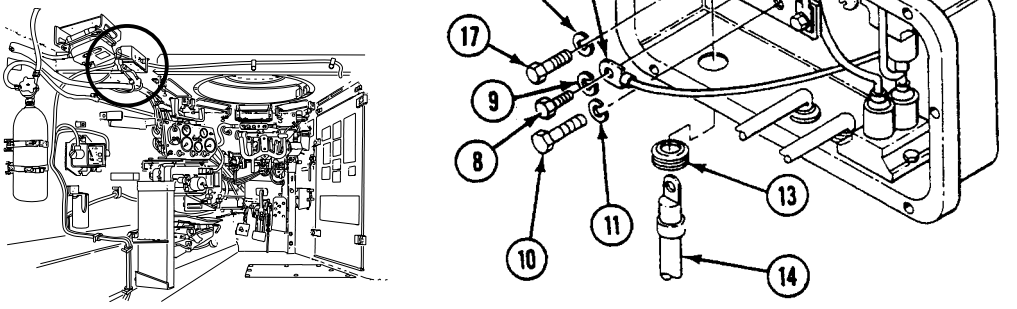

2. REMOVE SCREW (8), AND LOCKWASHER (9), SECURING E1 (7), TO BUS (1). DISCARD LOCKWASHER.

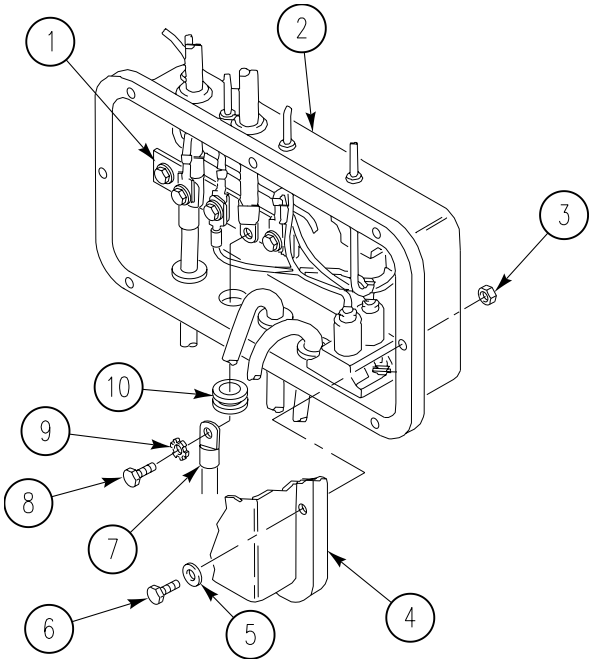

3. REMOVE TWO SCREWS (8) AND (10), LOCKWASHERS (9) AND (11), CIRCUIT LEADS 27E, 10, 14, AND 15 (2), CIRCUIT LEAD 49 (4), AND TWO GROMMETS (1) AND (3) FROM DISTRIBUTION BOX (5). DISCARD LOCKWASHER.

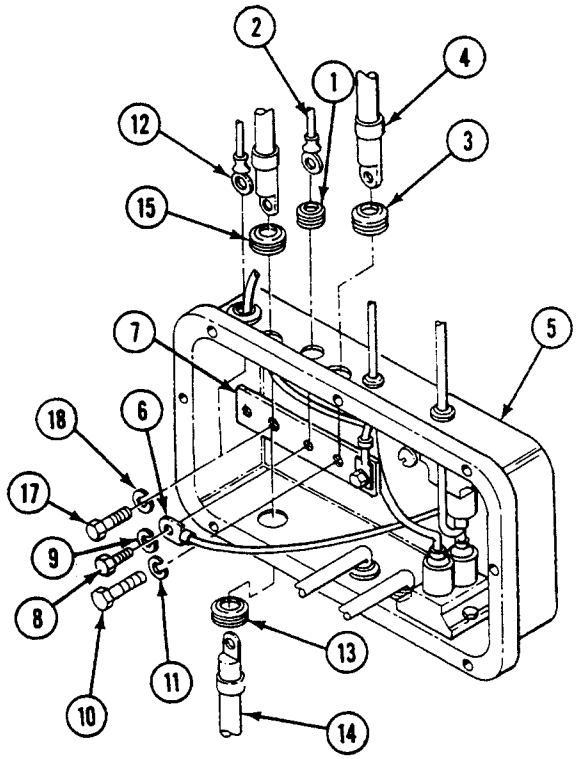

4. REMOVE SCREW (1), LOCKWASHER (2), AND BUS BAR (3) FROM DISTRIBUTION BOX (4). DISCARD LOCKWASHER.

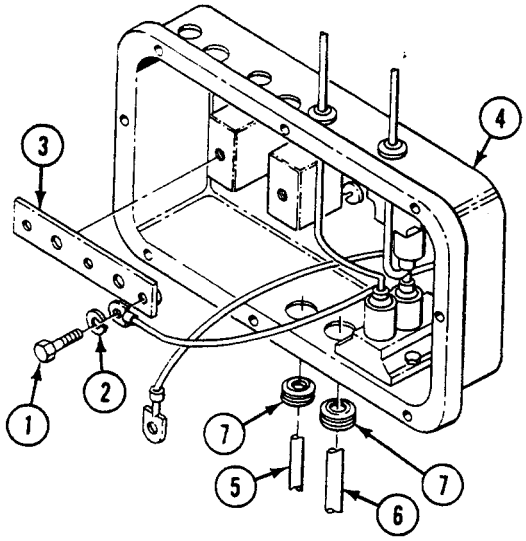

5. REMOVE CIRCUIT LEADS 2 (5), 2A (6), AND TWO GROMMETS (7) FROM DISTRIBUTION BOX (4).
6. DISCONNECT CIRCUIT LEAD 450 (10) 450A (11) 450B (12) AND 450C (13), FROM FOUR CIRCUIT BREAKERS (14).

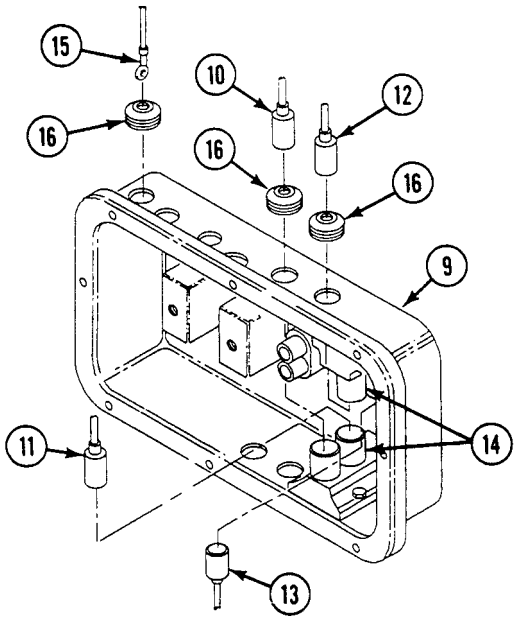

7. REMOVE CIRCUIT LEADS 400 (15), 450 (10) 450B (12) AND THREE GROMMETS (16) FROM DISTRIBUTION BOX (8).

8. REMOVE FIVE SCREWS (17), LOCKWASHERS (18), AND DISTRIBUTION BOX (9) FROM HULL. DISCARD LOCKWASHERS.

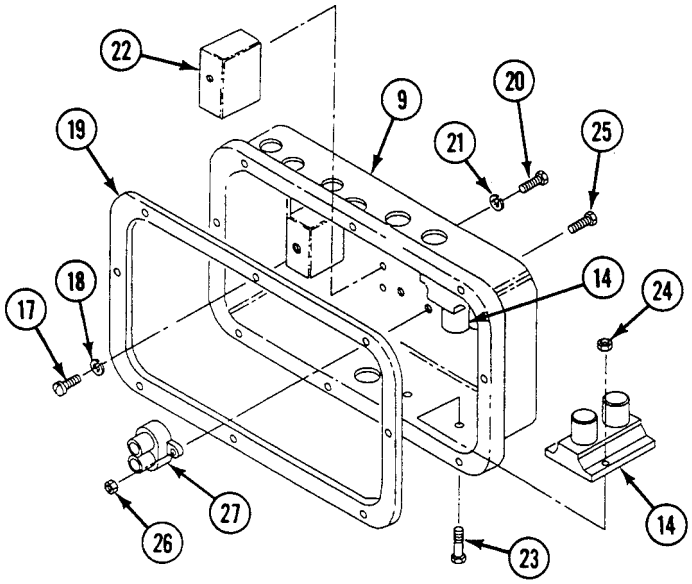

9. REMOVE GASKET (19) FROM DISTRIBUTION BOX (9). DISCARD GASKET.
10. REMOVE FOUR SCREWS (25) LOCKWASHERS (21), AND TWO BLOCKS (22) FROM BOX (9). DISCARD LOCKWASHERS
11. REMOVE FOUR SCREWS (21), LOCKNUTS (24), AND BILGE PUMP CIRCUIT BREAKERS (14) FROM BOX (9). DISCARD LOCKWASHER.

INSTALLATION

1. INSTALL TWO BILGE PUMP CIRCUIT BREAKERS (14) IN DISTRIBUTION BOX (9). SECURE WITH FOUR SCREWS (21) AND NEW LOCKNUTS (24).

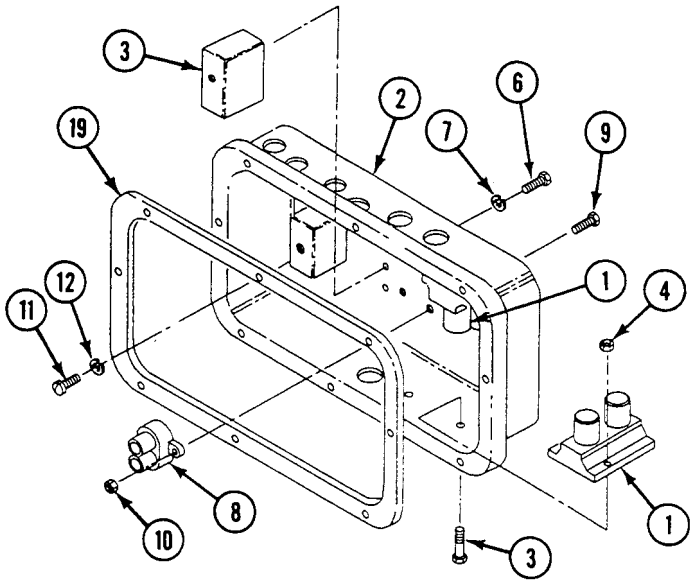

2. INSTALL TWO BLOCKS (3) IN DISTRIBUTION BOX (2). SECURE WITH FOUR SCREWS (6) AND NEW LOCKWASHERS (7).

3. INSTALL THREE GROMMETS (13) ON CIRCUIT LEADS 400 (14), 450 (15), AND 450B (16). ROUTE LEADS INTO DISTRIBUTION BOX (2) AND INSTALL GROMMETS IN DISTRIBUTION BOX.

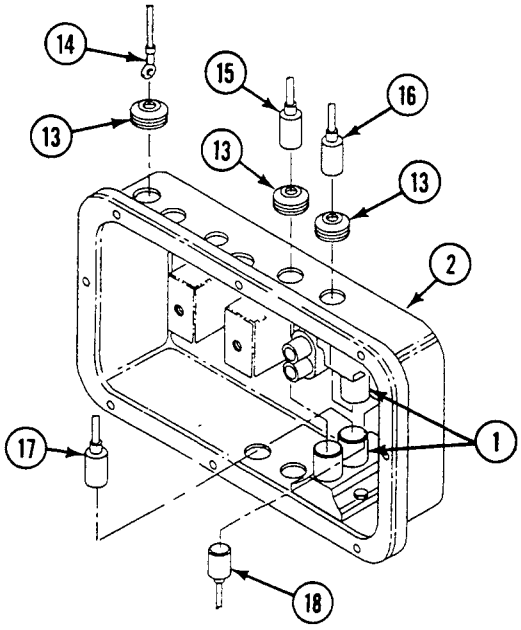

4. CONNECT CIRCUIT LEADS 450 (15), 450A (17), 450B (16), AND 450C (18) TO FOUR CIRCUIT BREAKERS (1).

5. INSTALL GROMMET (15) ON CIRCUIT LEAD 2 (16). ROUTE LEADS INTO DISTRIBUTION BOX (17) AND INSTALL GROMMETS IN DISTRIBUTION BOX (3).

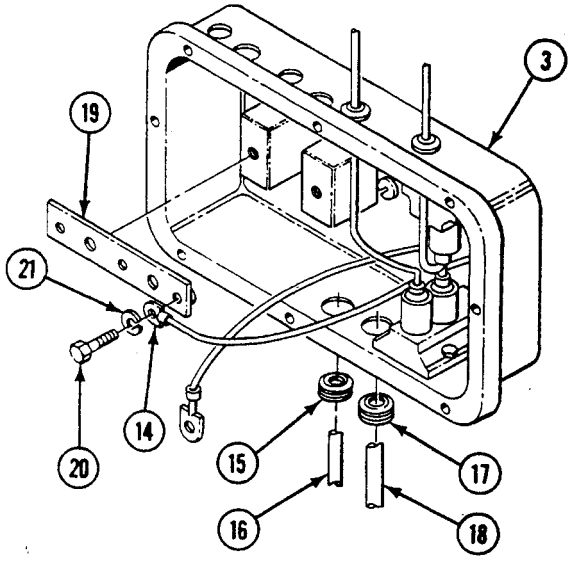

6. INSTALL BUS BAR (19) IN DISTRIBUTION BOX (3). SECURE WITH CIRCUIT LEAD 450 (14) SCREW (20) AND NEW LOCKWASHER (21).

7. INSTALL GROMMET (1) ON CIRCUIT LEADS 27E, 10, 14, AND 15 (2) AND GROMMET (3) ON CIRCUIT LEAD 49 (4). ROUTE LEADS INTO DISTRIBUTION BOX.

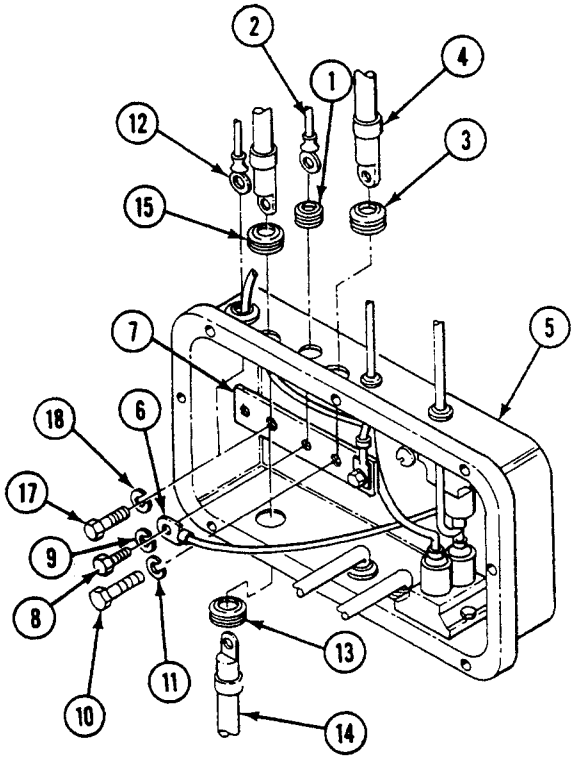

8. SECURE LEADS (2), AND LEAD 450 A (6), TO BUS BAR (7), WITH SCREW (8) AND NEW LOCKWASHER (9).
9. SECURE CIRCUIT 49 LEAD (4) TO BUS BAR (7) WITH SCREW (10) AND NEW LOCKWASHER (11).
10. ROUTE CIRCUIT LEAD 6L (12) INTO DISTRIBUTION BOX (5).
11. INSTALL GROMMET (13) ON CIRCUIT LEAD 6 (14) AND GROMMET (15) ON CIRCUIT LEAD 6A (16). ROUTE LEADS INTO DISTRIBUTION BOX (5) AND INSTALL GROMMETS IN DISTRIBUTION BOX.
12. SECURE CIRCUIT 6 (14) 6A, (16) AND 6L (12) TO BUS BAR (7) WITH SCREW (17) AND NEW LOCKWASHER (18).

13. APPLY THIN COAT OF ADHESIVE SEALANT TO ONE SIDE OF GASKET (19) AND MOUNTING SURFACE OF DISTRIBUTION BOX (5) INSTALL GASKET ON BOX.

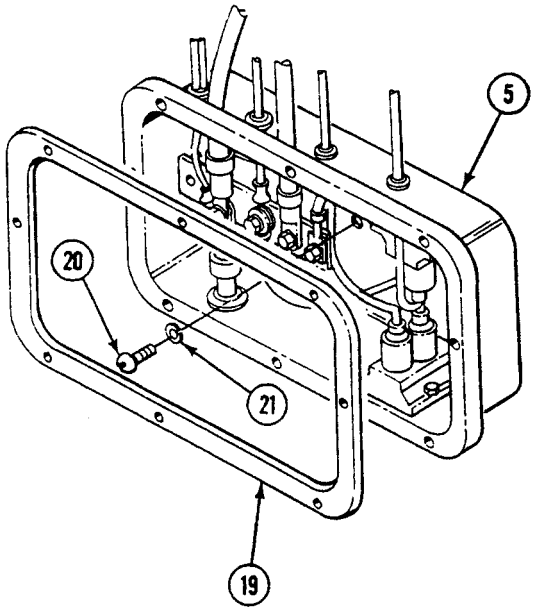

14. INSTALL SCREW (8), LOCKWASHER (9), AND E1 (7) TO BUS (1).

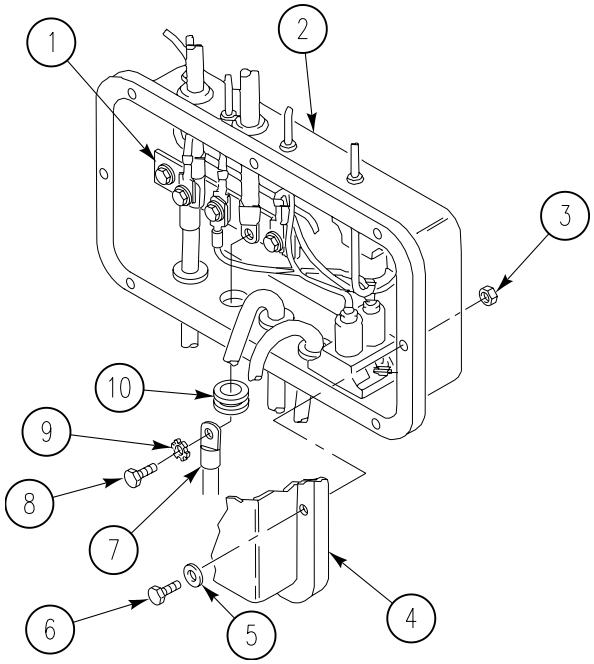

15. INSTALL DISTRIBUTION BOX (5) ON HULL. SECURE WITH FIVE SCREWS (20) AND NEW LOCKWASHERS (21).

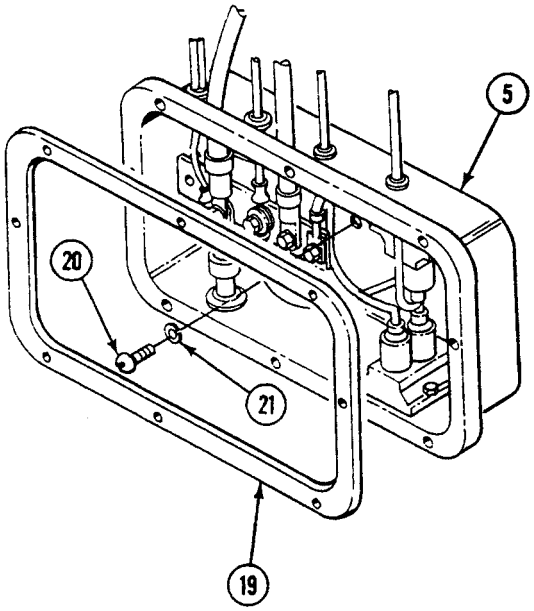

16. INSTALL MASTER SWITCH PANEL ASSEMBLY (WP 0246 00).
17. CONNECT BATTERY GROUND STRAP (WP 0237 00).

END OF TASK

REPLACE DISTRIBUTION BOX ASSEMBLY 0194 00

THIS WORK PACKAGE COVERS:

Removal (page 0194 00-1).
Installation (page 0194 00-5).

INITIAL SETUP:

Maintenance Level
Unit

Tools and Special Tools
General mechanic's tool kit (WP 0397 00, Item 64)

Materials/Parts
Lockwasher (5)
Lockwasher (3)

Personnel Required
Unit mechanic 63T10

References
TM 9-2350-366-10-1

Equipment Condition
Engine stopped (TM 9-2350-366-10-1)
Carrier blocked (TM 9-2350-366-10-1)
Battery ground lead disconnected (WP 0237 00)
Master switch panel assembly removed (WP 0246 00)

REMOVAL

1. REMOVE SCREW (1), LOCKWASHER (2), LEADS 27E, 10, 15, 14 (3) AND 450A (4) FROM BUS BAR (5) OF DISTRIBUTION BOX (6). REMOVE GROMMET (7). DISCARD LOCKWASHER.

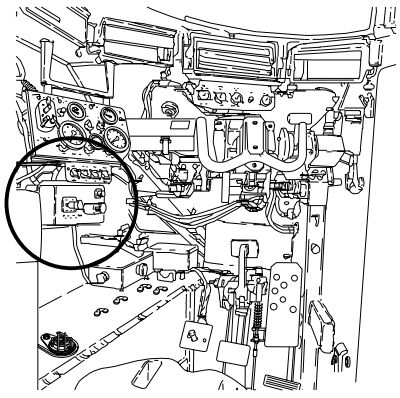

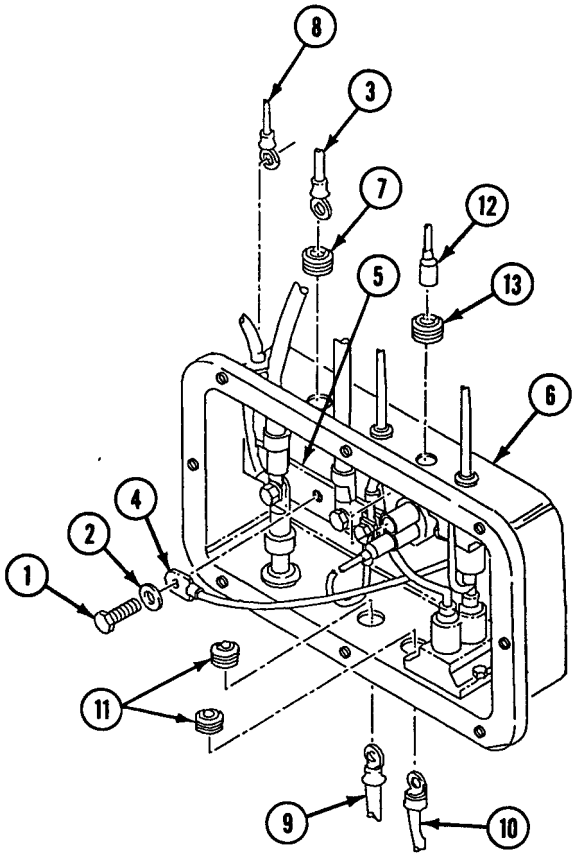

2. REMOVE SCREW (8), AND LOCKWASHER (9), SECURING E1 (7), TO BUS (1). DISCARD LOCKWASHER.

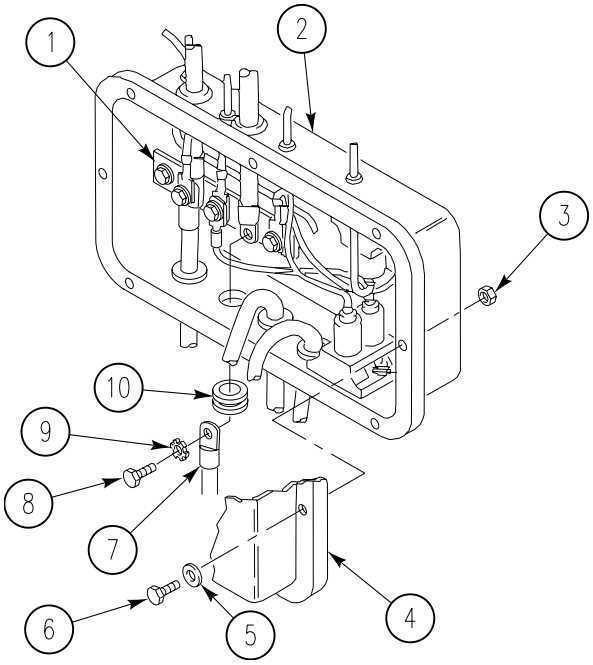

3. DISCONNECT CIRCUIT LEAD 400 (8). REMOVE LEAD FROM DISTRIBUTION BOX (6).

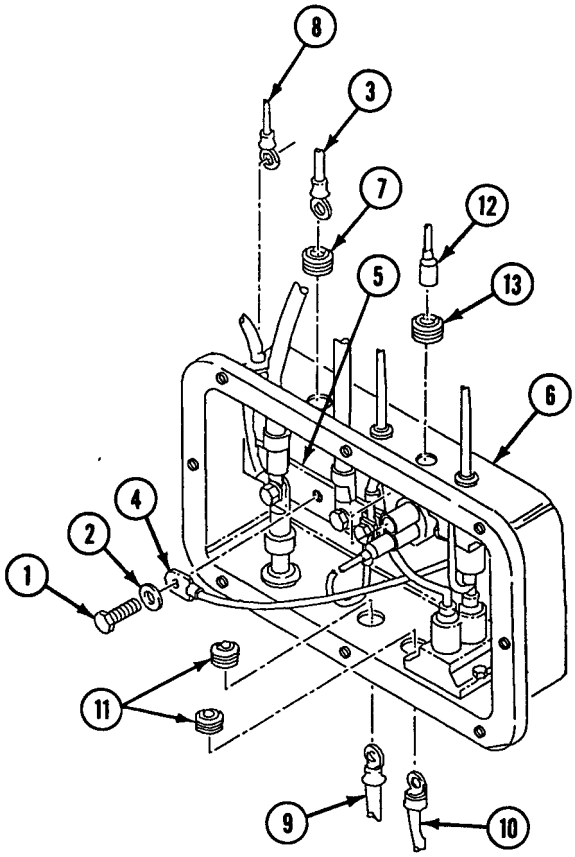

4. REMOVE CIRCUIT LEADS 2 (9), 2A (10), AND TWO GROMMETS (11), FROM DISTRIBUTION BOX (6).

REPLACE DISTRIBUTION BOX ASSEMBLY — Continued **0194 00**

5. REMOVE TWO SCREWS (1), LOCKWASHERS (2), CIRCUIT LEADS 6 (3), 6A (4), 6L (5), 49 (6), AND FOUR GROMMETS (7) FROM DISTRIBUTION BOX (8). DISCARD LOCKWASHERS.

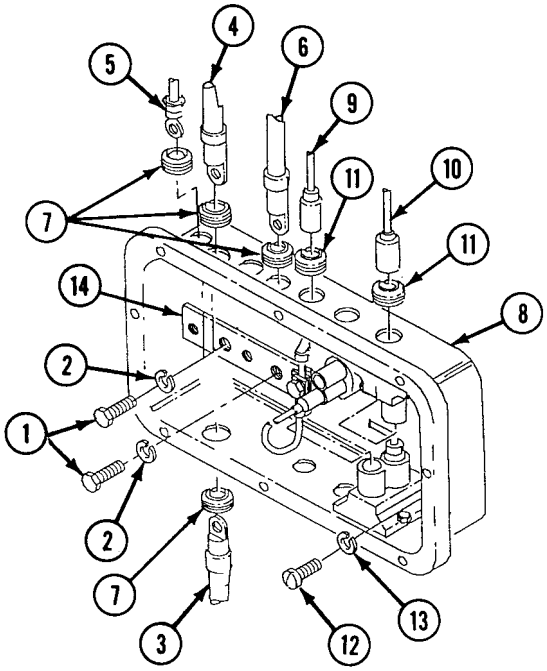

6. REMOVE CIRCUIT LEADS 450 (9) 450B (10) AND TWO GROMMETS (11).

7. REMOVE FIVE SCREWS (12), LOCKWASHERS (13), AND DISTRIBUTION BOX (8) FROM HULL. DISCARD LOCKWASHERS.

INSTALLATION

1. INSTALL DISTRIBUTION BOX (8) ON HULL. SECURE WITH FIVE SCREWS (12) AND NEW LOCKWASHERS (13).

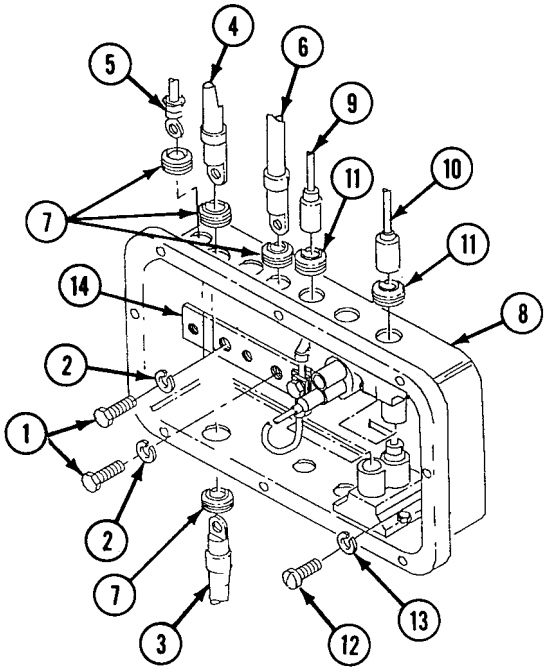

2. INSTALL CIRCUIT LEADS 450 (9), 450B (10) AND TWO GROMMETS (11) IN DISTRIBUTION BOX (8).
3. INSTALL CIRCUIT LEADS 6 (3), 6A (4), 6L (5), 49 (6), AND FOUR GROMMETS (7) IN DISTRIBUTION BOX (8) SECURE LEADS TO BUS BAR (14) WITH TWO SCREWS (1) AND NEW LOCKWASHERS (2).

REPLACE DISTRIBUTION BOX ASSEMBLY — Continued **0194 00**

4. INSTALL GROMMET (15) ON CIRCUIT LEAD 2 (16) AND GROMMET (17) ON CIRCUIT LEAD 2A (18). ROUTE LEADS INTO DISTRIBUTION BOX (8), AND INSTALL GROMMETS IN BOX.

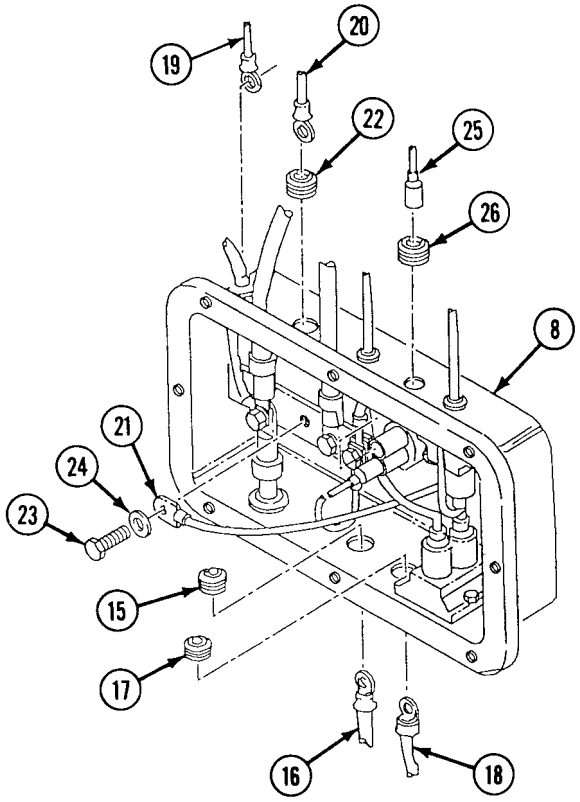

5. INSTALL CIRCUIT LEAD 222B (25) AND GROMMET (26) IN CIRCULATION BOX (8).
6. INSTALL LEAD 400 (19) IN DISTRIBUTION BOX (8).
7. INSTALL CIRCUIT LEADS 27E, 10, 14, AND 15 (20), 450 C (21), AND GROMMET (22). IN DISTRIBUTION BOX (8). SECURE WITH SCREW (23) AND NEW LOCKWASHER (24).

8. INSTALL SCREW (8) AND LOCKWASHER (9), SECURING E1 (7) TO BUS (1).

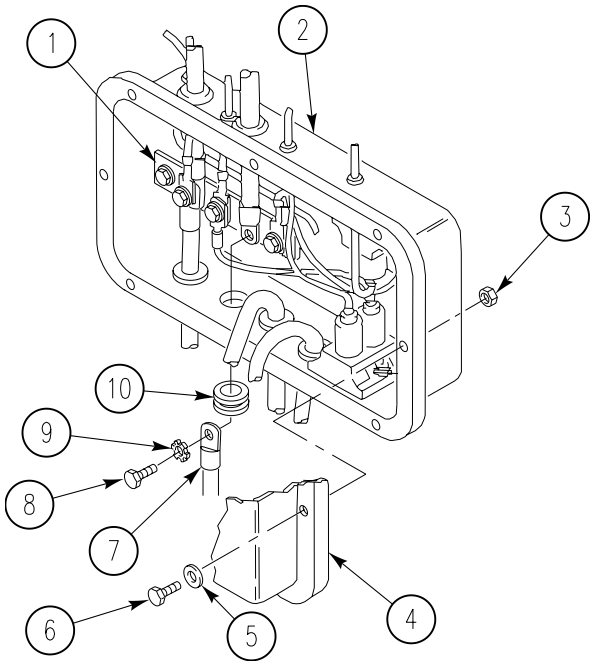

9. INSTALL MASTER SWITCH PANEL (WP 0246 00).
10. CONNECT BATTERY GROUND STRAP (WP 0237 00).

END OF TASK

INDEX

Subject — WP Sequence No.-Page No.

A

Abbreviations/Acronyms, List of 0001 00-4
Access Cover
  Fan Drive Pulley
    Installation 0310 00-1
    Removal 0310 00-1
  Hull Front
    Installation 0315 00-2
    Removal 0315 00-1
  Power Plant Bottom
    Installation 0316 00-4
    Removal 0316 00-1
Access Cover Plate, Engine
  Installation 0308 00-2
  Removal 0308 00-1
  Seal
    Installation 0321 00-2
    Removal 0321 00-1
Access Door
  Radiator
    Installation 0311 00-1
    Removal 0311 00-1
Access Doors
  VISMOD
    Installation 0307 00-3
    Removal 0307 00-2
Access Panel, Driver’s
  Power Plant
    Installation 0312 00-3
    Removal 0312 00-1
Access Panels
  Power Plan, Rear
    Installation 0309 00-2
    Removal 0309 00-1
Acronyms/Abbreviations, List of 0001 00-4
Adapter, Engine
  Tachometer
    Installation 0200 00-3
    Removal 0200 00-2
Adjust
  Coolant Pump Belts 0167 00-1
Air Box Pressure Transducer
  Installation 0210 00-1

INDEX, cont'd

Subject	WP Sequence No.-Page No.
Removal	0210 00-1
Air box pressure transducer	
Replace	0120 00-1
Air Box, Left	
Drain Check Valve and Tubes	
Installation	0109 00-2
Removal	0109 00-1
Air box, right	
Drain check valve and tubes	
Installation	0110 00-2
Removal	0110 00-1
Air Cleaner	
Filter Element	
Service	0138 00-1
Restriction Indicator Hose	
Installation	0143 00-2
Removal	0143 00-1
air cleaner	
assembly	
repair	0140 00-1
elbow	
replace	0139 00-1
retainer	
repair	0141 00-1
Air Intake Elbo	
Installation	0144 00-1
Air Intake Elbow	
Removal	0144 00-1
Air Intake Pipes, Heater	
Installation	0380 00-2
Removal	0380 00-1
Air Intake, Grill	
Elbow and Hose	
Installation	0145 00-4
Removal	0145 00-1
Anchor	
Torsion Bar	
Cleaning	0288 00-1
Installation	0288 00-2
Removal	0288 00-1
Arm Assembly, Idler Wheel	
Installation	0293 00-2
Removal	0293 00-1
Auxiliary power (slave)	

INDEX, cont'd

Subject — WP Sequence No.-Page No.

Receptacle
Replace 0242 00-2
Auxiliary power (slave) receptacle ground lead
Replace 0243 00-1
Auxiliary Tank
Installation 0158 00-2
Removal 0158 00-1
Auxiliary tank
Fluid level Detector
Replace 0122 00-1

B

Back Assembly
Driver's Seat
Installation 0361 00-2
Removal 0361 00-1
Backrest
Cushions and Belts, Personnel Seat
Installation 0358 00-2
Removal 0358 00-1
Balance Hose, Install 0162 00-2
Balance Hose, replace 0162 00-1
Batteries
And Retainers
Installation 0239 00-5
Removal 0239 00-1
Battery
Box
Install 0240 00-4
Repair 0240 00-2
Ground Strap
Connect/Disconnect 0237 00-3
Disconect/Connect 0237 00-2
Leads and terminals
Install 0238 00-4
Replace 0238 00-2
Bearing
And Control Assembly, TOW Start
Installation 0332 00-3
TOW Start
Removal 0332 00-2
Bearings and Seals
Idler Wheel Arm
Cleaning 0294 00-2

INDEX, cont'd

Subject	WP Sequence No.-Page No.
Installation	0294 00-3
Removal	0294 00-1
Belts	
Backrests and Cushions, Personnel Seat	
Installation	0358 00-2
Removal	0358 00-1
Coolant Pump	
Adjust	0167 00-1
Bilge Pump	
Circuit Breaker	
Replace	0258 00-1
Bilge Pump, Front	
Pipes	
Installation	0355 00-2
Removal	0355 00-1
Pump and Strainer	
Installation	0356 00-2
Removal	0356 00-1
Blackout headlight	
Assembly	0228 00-2
Disassembly	0228 00-1
Installation	0229 00-2
Removal	0229 00-1
Blackout Marker Light	
Installation	0227 00-1
Removal	0227 00-1
Blackout marker light	
Assembly	0226 00-2
Disassembly	0226 00-1
Box	
Control	
Personnel heater	
Replace	0373 00-1
Bracket	
Generator	
Installation	0171 00-3
Removal	0171 00-1
Parking Brake Switch	
Adjustment	0286 00-4
Cleaning and Inspection	0286 00-2
Removal	0286 00-1
Parking brake switch	
Installation	0286 00-3
Steering Support	

INDEX, cont'd

Subject	WP Sequence No.-Page No.
Installation	0304 00-5
Removal	0304 00-1
Bracket, Oil Can	
Installation	0367 00-1
Removal	0367 00-1
Brake	
Parking	
Adjust	0277 00-1
Cable control	
Install	0283 00-4
Replace	0283 00-1
Brake, Parking	
Control Lever	
Replace	0281 00-1
Brake, Service	
Pedal, Upper and Lower	
Installation	0284 00-5
Removal	0284 00-1
Brake, Transmission	
Check	
Adjustment	0280 00-1
Brakes	
Transmission	
Adjustment	0279 00-1
Bumper	
Rear Door	
Installation	0327 00-1
Removal	0327 00-1
Bypass Plug	
And Pressure Switch, Differential	
Installation	0272 00-2
Removal	0272 00-1
C	
Cable	
Speedometer	
Inspection	0198 00-1
Installation	0198 00-2
Removal	0198 00-1
Tachometer	
Inspection	0202 00-1
Installation	0201 00-5, 0202 00-2
Removal	0201 00-2, 0202 00-1
Tube, External, Fire Extinguisher	

INDEX, cont'd

Subject	WP Sequence No.-Page No.
Replace	0394 00-1
Cable and Adapter	
Speedometer	
Installation	0197 00-2
Removal	0197 00-1
Cable Assembly 1W2	
Special Purpose	
Installation	0182 00-3
Removal	0182 00-1
Cable, Flexible Core	
Speedometer/Tachometer	
Installation	0195 00-3
Removal	0195 00-1
Cable, Special Purpose	
Instrument Panel	
Installation	0215 00-5
Removal	0215 00-1
Carrier Assembly, Drive Sprocket	
Installation	0297 00-2
Removal	0297 00-1
Catch Hooks	
Rear Door	
Installation	0326 00-2
Removal	0326 00-1
Circuit Breaker	
Bilge Pump	
Replace	0258 00-1
Circuit breaker	
Replace	0257 00-1
Control	
Valve, Fire Extinguisher	
Replace	0393 00-1
Control Assembly	
And Bearing, TOW Start	
Installation	0332 00-3
TOW Start	
Adjustment	0331 00-1
Removal	0332 00-2
Control Assembly Cover	
TOW Start	
Installation	0333 00-2
Removal	0333 00-1
Control Box	
Personnel heater	

INDEX, cont'd

Subject	WP Sequence No.-Page No.
Assembly	0372 00-4
Disassembly	0372 00-1
Repair or Replacement	0372 00-4
Control box	
Personnel heater	
Replace	0373 00-1
Control Lever Assembly	
Parking Brake	
Replace	0281 00-1
Controller	
Glow Plug	
Installation	0127 00-2
Removal	0127 00-1
Coolant air separator, Install	0164 00-2
Coolant air separator, replace	0164 00-1
Coolant hose and tube, upper, replace	0160 00-1
Coolant Pump	
Belts	
Adjust	0167 00-1
Engine	
Installation	0169 00-5
Replace	0169 00-1
Idler Pulley/Belts	
Installation	0168 00-5
Replace	0168 00-1
Coolant Temperature Transmitter	
Installation	0205 00-2
Removal	0205 00-1
Cooling System	
Drain	0155 00-2
Cover, Access	
Hull Front	
Installation	0315 00-2
Removal	0315 00-1
Power Plant, Bottom	
Installation	0316 00-4
Removal	0316 00-1
Cover, Control Assembly	
TOW Start	
Installation	0333 00-2
Removal	0333 00-1
Cover, Thermostat	
Installation	0165 00-3
Removal	0165 00-1

INDEX, cont'd

Subject — WP Sequence No.-Page No.

Crew
- Fan switch and circuit breaker
  - Installation . . . 0251 00-2
  - Removal . . . 0251 00-1

Crew Fan Switch
- Circuit Breaker
  - Installation . . . 0251 00-2
  - Removal . . . 0251 00-1

Crew Internal Fresh Air
- Duct Assembly
  - Installation . . . 0262 00-3
  - Removal . . . 0262 00-2

Crew Ventilation Fan
- Installation . . . 0259 00-4
- Removal . . . 0259 00-1

Cushions
- Backrest and Belts, Personnel Seat
  - Installation . . . 0358 00-2
  - Removal . . . 0358 00-1

Cylinder
- Fire Extinguisher
  - Discharge Tubes, Replace . . . 0391 00-1

D

Data Plates
- Cleaning . . . 0105 00-1
- Installation . . . 0105 00-2
- Removal . . . 0105 00-1

Decals
- Cleaning . . . 0105 00-1
- Installation . . . 0105 00-2
- Removal . . . 0105 00-1

Detector
- Auxiliary tank fluid level
  - Replace . . . 0122 00-1

Differential
- Pressure Switch and Bypass Plug
  - Installation . . . 0272 00-2
  - Removal . . . 0272 00-1

Differential pressure switch
- Fuel filter
  - Replace . . . 0121 00-1

Discharge Tubes
- Cylinder

INDEX, cont'd

Subject	WP Sequence No.-Page No.
Replace	0391 00-1
Distribution Box	
STE/ICE	
Replace	0387 00-2
Distribution box	
Assembly	
Install	0194 00-5
Replace	0194 00-1
Repair	
Install	0193 00-4
Remove	0193 00-1
Dome light	
Assembly	0222 00-2
Disassembly	0222 00-1
Installation	0236 00-1
Removal	0236 00-1
Dome light lens	
Installation	0223 00-3
Removal	0223 00-1
Dome light switch/circuit breaker	
Rear	
Removal	0224 00-2
Domelight interlock switch	
Adjustment	0225 00-2
Installation	0225 00-2
Removal	0225 00-1
Domelight switch/circuit breaker	
Rear	
Installation	0224 00-2
Door	
Turret Shield	
Installation	0345 00-5
Removal	0345 00-1
Door Handles, Hinges, Latches, and Chain	
Right Rear	
Installation	0328 00-4
Removal	0328 00-1
Door, Access	
Radiator	
Installation	0311 00-1
Removal	0311 00-1
Drain Check Valve and Tubes	
Left Ar Box	
Installation	0109 00-2

INDEX, cont'd

Subject	WP Sequence No.-Page No.
Removal	0109 00-1
Drain check valve and tubes	
Right air box	
Installation	0110 00-2
Removal	0110 00-1
Drain Cock	
And Hose	
Replace	0163 00-1
Drain cock and hose, Install	0163 00-2
Drain Plugs	
Hull	
Installation	0334 00-1
Removal	0334 00-1
Drain Tube and Bracket	
Transmission Oil	
Removal	0264 00-1
Drain tube and bracket	
Transmission oil	
Installation	0264 00-2
Drive Belt	
Generator	
Adjustment	0172 00-1
Installation	0173 00-2
Removal	0173 00-1
Ventilating Fan	
Install	0148 00-2
Remove	0148 00-1
Drive Sprocket Carrier Assembly	
Installation	0297 00-2
Removal	0297 00-1
Drive Srocket	
Carrier Assembly	
Installation	0296 00-1
Removal	0296 00-1
Drive, Variable Speed	
Fan and Generator	
Installation	0178 00-2
Removal	0178 00-1
Driver	
Seat Assembly	
Installation	0359 00-2
Removal	0359 00-1
Driver's	
Level Indicator and Mount Plate	

INDEX, cont'd

Subject	WP Sequence No.-Page No.
Installation	0203 00-2
Removal	0203 00-1
Driver's Compartment	
Floor Plates	
Install	0342 00-2
Remove	0342 00-1
Driver's Footrest	
Installation	0366 00-2
Removal	0366 00-1
Driver's Hatch	
Assembly	0340 00-13
Cleaning	0340 00-11
Disassembly	0340 00-6
Inspection	0340 00-11
Installation	0340 00-16
Removal	0340 00-2
Repair	0340 00-11
Driver's hatch switch 1S6	
Installation	0253 00-3
Removal	0253 00-1
Driver's hatch switch 1S9	
Installation	0252 00-3
Removal	0252 00-1
Driver's Hatch, Adjustment	
Interior Lock, Adjustment	0338 00-3
Driver's Hatch, Installation	
Cushion Pad, Installation	0337 00-2
Interior Lock, Installation	0338 00-2
Driver's hatch, Installation	
Vision block locks and seals, Installation	0339 00-3
Driver's Hatch, Removal	
Cushion Pad, Removal	0337 00-1
Interior Lock, Removal	0338 00-1
Driver's hatch, Removal	
Vision block locks and seals, Removal	0339 00-1
Driver's Power Plant Access Panel	
Installation	0312 00-3
Removal	0312 00-1
Driver's Seat	
Post Assembly	
Installation	0364 00-1
Removal	0364 00-1
Repair	
Assemble	0360 00-3

INDEX, cont'd

Subject	WP Sequence No.-Page No.
Disassemble	0360 00-1
Driver's Seat Back Assembly	
Repair	
Assemble	0362 00-1, 0362 00-2
Duct Assembly	
Crew Internal Fresh Air	
Installation	0262 00-3
Removal	0262 00-2
External Fresh Air	
Installation	0261 00-2
Removal	0261 00-1
E	
Element	
Filter	
Air Cleaner	
Service	0138 00-1
Engine	
Coolant Pump	
Installation	0169 00-5
Replace	0169 00-1
Exhaust elbows	
Left/right, Install	0153 00-2
Left/right, replace	0153 00-1
Lifting Backet	
Removal	0111 00-1
Lifting Bracket	
Installation	0111 00-2
Oil filler cap	
Install	0112 00-2
Remove	0112 00-1
Oil Gauge Rod/Tube	
Installation	0114 00-3
Removal	0114 00-1
Oil sampling valve and hose	
Install	0113 00-2
Remove	0113 00-1
Wiring Harness	
Clean, Inspect, and Repair	0191 00-5
Removal	0191 00-1
Wiring harness	
Installation	0191 00-5
Engine Access Cover Plate	
Installation	0308 00-2

INDEX, cont'd

Subject	WP Sequence No.-Page No.
Removal	0308 00-1
Seal	
Installation	0321 00-2
Removal	0321 00-1
Engine Fuel	
Supply Hose	
Install	0130 00-3
Replace	0130 00-1
Engine Fuel Pump, Installation	0116 00-5
Engine Fuel Pump, Removal	0116 00-2
Engine Fuel Return Hose	
Installation	0131 00-3
Removal	0131 00-1
Engine Mounts	
Installation	0108 00-2
Removal	0108 00-1
Engine Oil Low Pressure Transmitter	
Installation	0204 00-2
Removal	0204 00-1
Engine Oil Low Pressure Transmitter Hardware	
Installation	0204 00-2
Removal	0204 00-1
Engine start switch	
Installation	0249 00-2
Removal	0249 00-1
engine, Install	
exhaust elbows and double flex joint, Install	0149 00-3
engine, replace	
exhaust elbows and double flex joint, replace	0149 00-2
Equipment Description and Data	0002 00-1
Exhaust Evacuator	
Valve and Connector	
Removal	0146 00-1
Exhaust Joint	
Double Flex	
Replace	0150 00-1
exhaust joint, Remove	
double flex, Remove	0149 00-2, 0149 00-3
Exhaust Muffler, Installation	
Exhaust Mufler Bracket , Installation	0152 00-2
Exhaust Muffler, Replace	
Exhaust Mufler Bracket , Replace	0152 00-1
Exhaust Pipes, Heater	
Installation	0380 00-2

INDEX, cont'd

Subject	WP Sequence No.-Page No.
Removal	0380 00-1
exhaust, replace	
muffler and bracket, replace	0151 00-2
Expendable/Durable Supplies and Materials List	0399 00-1
External	
Fresh Air System	
Filter	
Installation	0263 00-2
Removal	0263 00-1
External Fresh Air	
Duct Assembly	
Installation	0261 00-2
Removal	0261 00-1
Extinguisher, Fire	
Cylinder and Mount	
Replace	0390 00-1
F	
Fan and Generator Variable Speed Drive	
Installation	0178 00-2
Removal	0178 00-1
Fan drive Adjust	
Belt, ventilating, Adjust	0147 00-1
Fan Drive Pulley	
Access Cover	
Installation	0310 00-1
Removal	0310 00-1
Filler tube	
Dipstick, Final Drive	
Installation	0273 00-3
Removal	0273 00-1
Filter	
External	
Fresh Air System	
Installation	0263 00-2
Removal	0263 00-1
Filter Element, Oil	
Transmission	
Installation	0269 00-2
Removal	0269 00-1
Final Drive	
Differential oil seal	
Install	0275 00-2
Replace	0275 00-1

INDEX, cont'd

Subject	WP Sequence No.-Page No.
Filler Tube and Dipstick	
Installation	0273 00-3
Removal	0273 00-1
Replace	0274 00-1
Fire Exinguisher	
Cylinder and Mount	
Replace	0390 00-1
Floor Plates/Rubber Strips	
Installation	0343 00-2
Removal	0343 00-1
Footrest, Driver's	
Installation	0366 00-2
Removal	0366 00-1
Fresh Air System	
Filter	
External	
Installation	0263 00-2
Removal	0263 00-1
Front Bilge Valve	
Replace	0357 00-1
Fuel Fillters and Bracket	
Primary and Secondary	
Installation	0132 00-4
Fuel Filter	
Differential Pressure Switch	
Installation	0136 00-5
Removal	0136 00-1
Fuel filter	
Differential pressure switch	
Replace	0121 00-1
Fuel Filter Elements	
Primary and Secondary	
Installation	0133 00-2
Removal	0133 00-1
Fuel Filters and Bracket	
Primary and Secondary	
Removal	0132 00-1
Fuel Lines	
Air From Personnel Heater	
Bleed	0384 00-1
Fuel Pump	
Personnel Heater	
Assembly	0383 00-2
Cleaning	0383 00-2

INDEX, cont'd

Subject	WP Sequence No.-Page No.
Disassembly	0383 00-1
Fuel quantity transmitter	
Install	0124 00-2
replace	0124 00-1
Fuel Return Hose, Engine	
Installation	0131 00-3
Removal	0131 00-1
Fuel Return Pressure Transducer	
Installation	0135 00-2
Removal	0135 00-1
Fuel return pressure transducer	
Replace	0118 00-1
Fuel shut-off valve	
Personnel Heater	
Replace	0381 00-1
Fuel Supply Pressure Transducer	
Installation	0134 00-1
Removal	0134 00-1
Fuel supply pressure transducer	
Replace	0117 00-1
Fuel tanks	
Drain	0123 00-1
Fuel tube	
Personnel heater	
Replace	0379 00-1
G	
Gauges	
Instrument Panel	
Installation	0221 00-2
Removal	0221 00-1
General Information	0001 00-1
Generator	
Bracket	
Installation	0171 00-3
Removal	0171 00-1
Drive Belt	
Adjustment	0172 00-1
Installation	0173 00-2
Removal	0173 00-1
Field pressure switch	
Installation	0255 00-2
Removal	0255 00-1
Turnbuckle Parts	

INDEX, cont'd

Subject	WP Sequence No.-Page No.
Installation	0170 00-2
Replace	0170 00-1
Glow Plug	
Controller	
Installation	0127 00-2
Removal	0127 00-1
Controller Mounting Bracket	
Replace	0129 00-1
Power Harness	
Replace	0128 00-1
Glow Plugs	
Installation	0126 00-2
Removal	0126 00-1
Governor	
Installation	0137 00-1
Removal	0137 00-1
Grill	
Air Intake Elbow and Hose	
Installation	0145 00-4
Removal	0145 00-1
Grill Screen	
Power Plant	
Installation	0320 00-1
Removal	0320 00-1
Ground Lead	
Horn	
Installation	0318 00-2
Removal	0318 00-1
Ground lead	
And Mounts, Instrument panel	
Installation	0211 00-3
Removal	0211 00-1
Ground Strap	
Battery	
Connect/Disconnect	0237 00-3
Disconect/Connect	0237 00-2
Guard	
Headlight	
Installation	0325 00-2
Removal	0325 00-1
Stop Light-Tail Light	
Installation	0232 00-4
Removal	0232 00-1

INDEX, cont'd

Subject — WP Sequence No.-Page No.

H

Handle
External, Fire Extinguisher
Replace . . . 0393 00-1
Handle Shield, External
Replace . . . 0392 00-1
Hardware
Engine Oil Low Pressure Transmitter
Installation . . . 0204 00-2
Removal . . . 0204 00-1
Harness
Installation . . . 0126 00-2
Removal . . . 0126 00-1
Headlight
Blackout
Assembly . . . 0228 00-2
Disassembly . . . 0228 00-1
Installation . . . 0229 00-2
Removal . . . 0229 00-1
High beam selector switch
Installaltion . . . 0235 00-2
Removal . . . 0235 00-1
Service
Assembly . . . 0230 00-2
Disassembly . . . 0230 00-1
Installation . . . 0231 00-2
Removal . . . 0231 00-1
Headlight Guard
Installation . . . 0325 00-2
Removal . . . 0325 00-1
Heater Air Intake Pipes
Installation . . . 0380 00-2
Removal . . . 0380 00-1
Heater Exhaust Pipes
Installation . . . 0380 00-2
Removal . . . 0380 00-1
Horn
Installation . . . 0318 00-2
Removal . . . 0318 00-1
Horn switch
Installation . . . 0250 00-2
Removal . . . 0250 00-1
Hose
And Drain Cock

INDEX, cont'd

Subject — WP Sequence No.-Page No.

Replace . . . 0163 00-1
Hose, Engine Fuel Return
Installation . . . 0131 00-3
Removal . . . 0131 00-1
Hose, Indicator
Air Cleaner Restriction
Installation . . . 0143 00-2
Removal . . . 0143 00-1
Hoses
Thermostat to Variable Speed Drive
Installation . . . 0207 00-4
Removal . . . 0207 00-2
Hoses, Return
Transmission Oil Supply
Installation . . . 0208 00-4
Removal . . . 0208 00-1
Hub
Road Wheel
Cleaning . . . 0290 00-2
Installation . . . 0290 00-2
Removal . . . 0290 00-1
Hull Drain Plugs
Installation . . . 0334 00-1
Removal . . . 0334 00-1
Hull Nose Assembly
Installation . . . 0313 00-5
Removal . . . 0313 00-1

I

Idler
Pulley/belts, Coolant Pump
Installation . . . 0168 00-5
Pulley/belts, coolant pump
Replace . . . 0168 00-1
Idler arm
Spring tensioner
Install . . . 0175 00-3
replace . . . 0175 00-1
Idler Wheel
Arm Assembly
Installation . . . 0293 00-2
Removal . . . 0293 00-1
Installation . . . 0292 00-2
Removal . . . 0292 00-1

INDEX, cont'd

Subject	WP Sequence No.-Page No.
Idler Wheel Arm	
Bearings and Seals	
Cleaning	0294 00-2
Installation	0294 00-3
Removal	0294 00-1
Impact Absorber	
Driver's Seat	
Replace	0363 00-1, 0363 00-2
Indicator Lights	
Installation	0219 00-2
Removal	0219 00-1
Instrument Panel	
Battery-Generator Gauge, Wiring Harness	
Installation	0216 00-3
Removal	0216 00-1
Mounts and Ground Lead	
Installation	0211 00-3
Removal	0211 00-1
Special Purpose, Cable	
Installation	0215 00-5
Removal	0215 00-1
Warning Lights	
Installation	0218 00-2
Removal	0218 00-1
Repair or Replacement	0218 00-2
Instrument panel	
Installation	0220 00-5
On-off switches	
Installation	0247 00-3
Removal	0247 00-1
Removal	0220 00-1
Instrument Panel Gauges	
Installation	0221 00-2
Removal	0221 00-1
Instrument Warning Light Panel	
Installation	0217 00-1
Removal	0217 00-1
Interior Lock	
Driver's Hatch	
Adjustment	0338 00-3
Interior Lock, Removal	
Driver's Hatch, Removal	0338 00-1, 0338 00-2

J

INDEX, cont'd

Subject — WP Sequence No.-Page No.

Joint, Exhaust
Double Flex
Replace 0150 00-1

L

Latch Assembly
Turret Shield Door
Repair or Replacement 0344 00-1
Latch Strike
Turret Shield Door
Installation 0348 00-1
Removal 0348 00-1
Lead
Master Switch to Auxiliary Power Receptacle (Circuit 50)
Installation 0244 00-2
Removal 0244 00-1
Repair or Replacement 0244 00-2
Lead (
Master switch to distribution box
Install 0192 00-3
Replace 0192 00-1
Left Air Box
Drain Check Valve and Tubes
Installation 0109 00-2
Removal 0109 00-1
Lens
Dome light
Installation 0223 00-3
Removal 0223 00-1
Level Indicator and Mount Plate
Driver's
Installation 0203 00-2
Removal 0203 00-1
Lifting Bracket
Engine
Installation 0111 00-2
Removal 0111 00-1
Lifting Eye
Installation 0324 00-1
Removal 0324 00-1
Light
Blackout Marker
Installation 0227 00-1
Removal 0227 00-1

INDEX, cont'd

Subject	WP Sequence No.-Page No.
Blackout marker	
Assembly	0226 00-2
Disassembly	0226 00-1
Dome	
Assembly	0222 00-2
Disassembly	0222 00-1
Installation	0236 00-1
Removal	0236 00-1
Left Stop and Tail	
Assembly	0233 00-1
Left Stop Light-Tail	
Disassembly	0233 00-1
Light switch	
Main	
Installation	0248 00-2
Removal	0248 00-1
Lights	
Panel and Indicator	
Installation	0219 00-2
Removal	0219 00-1
Stop-tail	
Right	
Assembly	0234 00-1
Disassembly	0234 00-1
Stop-Tail and Guards	
Installation	0232 00-4
Removal	0232 00-1
Warning panel	
Installation	0212 00-3
Removal	0212 00-2
Lights, Warning	
Instrument Panel	
Installation	0218 00-2
Removal	0218 00-1
Repair or Replacement	0218 00-2
Linkage	
Service Bake Control	
Removal	0282 00-1
Service Brake Control	
Installation	0282 00-6
Steering Wheel	
Adjustment	0302 00-1
Steering wheel	
Replace	0306 00-1

INDEX, cont'd

Subject	WP Sequence No.-Page No.
List of Abbreviations/Acronyms	0001 00-4
M	
Main light switch	
Installation	0248 00-2
Removal	0248 00-1
Maintenance Allocation Chart (MAC)	0396 00-1
Markers	
Cleaning	0105 00-1
Installation	0105 00-2
Removal	0105 00-1
Master Switch	
Installation	0245 00-3
Removal	0245 00-1
Master Switch Lead	
Circuit 6	
Install	0241 00-4
Remove	0241 00-1
Master Switch Panel Assembly	
Installation	0246 00-3
Removal	0246 00-1
Master Switch to Auxiliary Power Receptacle Lead (Circuit 50)	
Installation	0244 00-2
Removal	0244 00-1
Repair or Replacement	0244 00-2
Mount	
Shock absorber	
Install	0353 00-2
Replace	0353 00-1
Transmission	
Installation	0265 00-2
Removal	0265 00-1
Mounts	
Engine	
Installation	0108 00-2
Removal	0108 00-1
Mounts, Instrument Panel	
And Ground Lead	
Installation	0211 00-3
Removal	0211 00-1
muffler, replace	
extension, replace	0151 00-2
N	

INDEX, cont'd

Subject	WP Sequence No.-Page No.
Nomenclature Cross-Reference List	0001 00-2
O	
Oil Cooler, Transmission	
Hoses, Fittings and Mounting	
Installation	0270 00-6
Removal	0270 00-1
Oil filler cap	
Engine	
Install	0112 00-2
Remove	0112 00-1
Oil Gauge Rod Tube	
Engine	
Installation	0114 00-3
Removal	0114 00-1
Oil Level Dipstick	
Transmission Tube and Adapter	
Installation	0268 00-3
Removal	0268 00-1
Oil Level Tube	
Transmission Dipstick and Adapter	
Installation	0268 00-3
Removal	0268 00-1
Oil sampling valve and hose	
Engine	
Install	0113 00-2
Remove	0113 00-1
Oilcan Bracket	
Installation	0367 00-1
Removal	0367 00-1
On-off switches	
Instrument panel	
Installation	0247 00-3
Removal	0247 00-1
Outlet, Utility	
Receptacle	
Replace	0319 00-1
P	
Panel	
Instrument	
Installation	0220 00-5
instrument	
Removal	0220 00-1

INDEX, cont'd

Subject	WP Sequence No.-Page No.
Left Turret Shield	
Installation	0351 00-5
Removal	0351 00-1
Right Turret Shield	
Installation	0350 00-5
Removal	0350 00-1
Warning Light	
Installation	0213 00-2
Removal	0213 00-1
Panel Assembly	
Warning Light	
Installation	0214 00-2
Removal	0214 00-1
Panel Lights	
Installation	0219 00-2
Removal	0219 00-1
Panel, Instrument	
Warning Lights	
Installation	0218 00-2
Removal	0218 00-1
Repair or Replacement	0218 00-2
Parking Brake	
Adjust	0277 00-1
Parts, Turnbuckle	
Generator	
Installation	0170 00-2
Replace	0170 00-1
Pedal	
Service Brake, Upper and Lower	
Installation	0284 00-5
Removal	0284 00-1
Personnel Heater	
Control box	
Assembly	0372 00-4
Disassembly	0372 00-1
Repair or Replacement	0372 00-4
Duct	
Installation	0368 00-1
Removal	0368 00-1
Fuel Pump	
Assembly	0383 00-2
Cleaning	0383 00-2
Disassembly	0383 00-1
Personnel heater	

INDEX, cont'd

Subject	WP Sequence No.-Page No.
Assembly	
Repair or Replacement	0370 00-1
Replace	0371 00-1
Control box	
Replace	0373 00-1
Duct and hoses	
Replace	0369 00-1
Fuel filter	
Bracket M981A3	
Replace	0375 00-1
M981A3	
Replace	0375 00-1
Replace	0378 00-1
Fuel pump	
Replace	0376 00-1
Fuel pump hose	
Replace	0377 00-1
Hose	
Replace	0374 00-1
Tube	
Replace	0379 00-1
Personnel Heater Fuel Filter	
Service	0382 00-1
Personnel Seat	
Backrests, Cushions and Belts	
Installation	0358 00-2
Removal	0358 00-1
Pin	
Shock Absorber	
Install	0354 00-2
Replace	0354 00-1
Pipes	
Front Bilge Pump	
Installation	0355 00-2
Removal	0355 00-1
Plates	
Rear Tiedown	
Replace	0323 00-1
Plug, Glow	
Power Harness	
Replace	0128 00-1
PMCS	
30-Day Operation Checks	0104 00-1
Maintenance Checks and Services	0104 00-1

INDEX, cont'd

Subject	WP Sequence No.-Page No.
Semi-annually Operation Checks	0104 00-1
Post Assembly	
Driver's Seat	
Installation	0364 00-1
Removal	0364 00-1
Repair	
Assemble	0365 00-4
Disassemble	0365 00-1
Power Plant	
Access Panel, Driver's	
Installation	0312 00-3
Removal	0312 00-1
Block	0107 00-1
Grill Screen	
Installation	0320 00-1
Removal	0320 00-1
Jacking	0107 00-1
Rear Access Panels	
Installation	0309 00-2
Removal	0309 00-1
Sling	
Replace	0336 00-1
Power Plant Assembly	
Installation	0106 00-14
Removal	0106 00-1
Power Plant Grille	
Installation	0335 00-5
Removal	0335 00-1
Propeller Shafts	
And Universal Joints	
Installation	0276 00-3
Removal	0276 00-2
Pulleys	
Flat Fan, Bearings,	
Installation	0174 00-4
Removal	0174 00-1
Pulse Tachometer	
STE/ICE	
Replace	0385 00-2
Pump, Coolant	
Engine	
Installation	0169 00-5
Replace	0169 00-1
Push-Pull Control Assembly	

INDEX, cont'd

Subject — WP Sequence No.-Page No.

Bracket , Links, Pins
Installation . . . 0301 00-6
Removal . . . 0301 00-1

Q

Quick-release Pin and Lanyard
Installation . . . 0305 00-2
Removal . . . 0305 00-1

R

Radiator
Access Door
Installation . . . 0311 00-1
Removal . . . 0311 00-1
Cleaning . . . 0156 00-1
Installation . . . 0157 00-4
Outlet tube and hoses, replace . . . 0161 00-1
Removal . . . 0157 00-1
Range Controller/Bracket
Transmission
Installation . . . 0266 00-4
Removal . . . 0266 00-2
Rear Compartment Air Ventilator
Install . . . 0341 00-1
Remove . . . 0341 00-1
Rear dome light switch/circuit breaker
Removal . . . 0224 00-2
Rear domelight switch/circuit breaker
Installation . . . 0224 00-2
Rear Door
Left Inside Hinges and Latch
Installation . . . 0330 00-3
Removal . . . 0330 00-1
Repair or Replacement . . . 0330 00-2
Rear Door Bumper
Installation . . . 0327 00-1
Removal . . . 0327 00-1
Rear Door Catch Hooks
Installation . . . 0326 00-2
Removal . . . 0326 00-1
Rear Door Handles, Hinges, Latches, and Chain
Right
Installation . . . 0328 00-4
Removal . . . 0328 00-1

INDEX, cont'd

Subject	WP Sequence No.-Page No.
Rear Door, Hinges, and Gaskets	
Installation	0329 00-4
Removal	0329 00-1
Rear Tiedown Plates	
Replace	0323 00-1
Receptacle	
Auxiliary power (slave)	
Replace	0242 00-2
Replace	0243 00-1
Utility Outlet	
Replace	0319 00-1
Regulator	
Voltage	
Adjust	0176 00-1
Regulator assembly	
Install	0177 00-2
Replace	0177 00-1
Relay Switch, Starter	
Installation	0256 00-5
Removal	0256 00-1
Replace	
Air Cleaner	0142 00-1
Retainers	
And Batteries	
Installation	0239 00-5
Removal	0239 00-1
Right air box	
Drain check valve and tubes	
Installation	0110 00-2
Removal	0110 00-1
Road Wheel	
Clean, Inspect, and Repair	0291 00-3
Installation	0291 00-3
Removal	0291 00-1
Road Wheel Hub	
Cleaning	0290 00-2
Installation	0290 00-2
Removal	0290 00-1
Road Wheel Support Arm	
Bearings, Seals	
Installation	0289 00-4
Removal	0289 00-1

S

INDEX, cont'd

Subject	WP Sequence No.-Page No.
Seat Assembly	
Driver's	
Installation	0359 00-2
Removal	0359 00-1
Seats, Personnel	
Backrests, Cushions and Belts	
Installation	0358 00-2
Removal	0358 00-1
Service Brake	
Control Linkage	
Adjustment	0278 00-1
Service Brake Control Linkage	
Installation	0282 00-6
Removal	0282 00-1
Service Headlight	
Installation	0231 00-2
Removal	0231 00-1
Service headlight	
Assembly	0230 00-2
Disassembly	0230 00-1
Service Upon Receipt	0103 00-1
Shaft	
Steering Support	
Installation	0304 00-5
Removal	0304 00-1
Shield, Handle, External	
Replace	0392 00-1
Shock Absorber	
Install	0352 00-3
Replace	0352 00-1
Shock absorber mount	
Install	0353 00-2
Replace	0353 00-1
Shunt	
STE/ICE	
Replace	0386 00-1
Sling	
Power Plant	
Inspect	0336 00-1
Speedometer	
Cable	
Inspection	0198 00-1
Installation	0198 00-2
Removal	0198 00-1

INDEX, cont'd

Subject	WP Sequence No.-Page No.
Cable and Adapter	
Installation	0197 00-2
Removal	0197 00-1
Installation	0196 00-1
Removal	0196 00-1
Speedometer/Tachometer	
Cable, Flexible Core	
Installation	0195 00-3
Removal	0195 00-1
Starter	
Installation	0115 00-3
Removal	0115 00-1
Starter Relay Switch	
Installation	0256 00-5
Removal	0256 00-1
STE/ICE	
Distribution Box	
Replace	0387 00-2
Pulse Tachometer	
Replace	0385 00-2
Shunt	
Replace	0386 00-1
Wiring Harness, Crew	
Replace	0388 00-2
STE/ICE Engine Wiring Harness	
Replace	0389 00-1
Steering	
Transmission	
Adjustment	0267 00-3
Operational Check	0267 00-1
Steering Lock	
Switch	
Installation	0303 00-1
Removal	0303 00-1
Steering Support	
Brackets, and Shaft	
Installation	0304 00-5
Removal	0304 00-1
Steering Wheel	
Linkage	
Adjustment	0302 00-1
Steering wheel linkage	
Replace	0306 00-1
Stencils	

INDEX, cont'd

Subject	WP Sequence No.-Page No.
Cleaning	0105 00-1
Installation	0105 00-2
Removal	0105 00-1
Stop Lght and Tail Light	
Left	
Assembly	0233 00-1
Stop Light-Tail Light	
Left	
Disassembly	0233 00-1
Stop light-tail light	
Right	
Assembly	0234 00-1
Disassembly	0234 00-1
Stop Light-Tail Light and Guards	
Installation	0232 00-4
Removal	0232 00-1
Stop Switch	
Replace	0285 00-1
Strap, Ground	
Battery	
Connect/Disconnect	0237 00-3
Disconect/Connect	0237 00-2
Supply Hose	
Engine Fuel	
Install	0130 00-3
Replace	0130 00-1
Switch	
Engine start	
Installation	0249 00-2
Removal	0249 00-1
Fuel	
Filter Differential pressure	
Replace	0121 00-1
Generator field pressure	
Installation	0255 00-2
Removal	0255 00-1
Headlight	
High beam selector	
Installation	0235 00-2
Removal	0235 00-1
Horn	
Installation	0250 00-2
Removal	0250 00-1
Parking Brake	

INDEX, cont'd

Subject — WP Sequence No.-Page No.

- Adjustment . . . 0286 00-4
- Cleaning and Inspection . . . 0286 00-2
- Removal . . . 0286 00-1

Parking brake
- Installation . . . 0286 00-3

Steering Lock
- Installation . . . 0303 00-1
- Removal . . . 0303 00-1

Transmission Oil High Temperature
- Installation . . . 0206 00-1
- Removal . . . 0206 00-1

Switch Assembly

Turret Shield Door
- Installation . . . 0349 00-3
- Removal . . . 0349 00-1

Switch, Master
- Installation . . . 0245 00-3
- Removal . . . 0245 00-1

Switch, Pressure

And Bypass Plug, Differential
- Installation . . . 0272 00-2
- Removal . . . 0272 00-1

Differential, Fuel Filter
- Installation . . . 0136 00-5
- Removal . . . 0136 00-1

T

Tachometer

Cable
- Inspection . . . 0202 00-1
- Installation . . . 0201 00-5, 0202 00-2
- Removal . . . 0201 00-2, 0202 00-1

Engine Adapter
- Installation . . . 0200 00-3
- Removal . . . 0200 00-2

Installation . . . 0199 00-1

Removal . . . 0199 00-1

Tachometer, Pulse

STE/ICE
- Replace . . . 0385 00-2

Tank, Auxiliary
- Installation . . . 0158 00-2
- Removal . . . 0158 00-1

Theory of Operation

INDEX, cont'd

Subject	WP Sequence No.-Page No.
Bilge Pumps	0003 00-1
Cooling System	0003 00-1
Driver's Controls	0003 00-1
Electrical System	0003 00-1
Engine, Air System	0003 00-1
Engine, Exhaust System	0003 00-1
Engine, Lubrication System	0003 00-1
Engine, Mechanical	0003 00-1
Final Drives	0003 00-1
Fire Suppression System	0003 00-1
Fuel System	0003 00-1
Generator	0003 00-1
Oil System	0003 00-1
Personnel Heater	0003 00-1
Starter	0003 00-1
Suspension System	0003 00-1
Transmission	0003 00-1
Thermostat	
Installation	0165 00-3
Removal	0165 00-1
Thermostat Cover	
Installation	0165 00-3
Removal	0165 00-1
Thermostat Hoses	
Removal	0166 00-1, 0166 00-3
Thermostat to Variable Speed Drive Hoses	
Installation	0207 00-4
Removal	0207 00-2
Thermostat Tubes	
Removal	0166 00-1, 0166 00-3
Thermostatic fan speed switch, replace	0159 00-1
Torsion Bar	
Removal	0287 00-2
Torsion bar	
Installation	0287 00-5
Torsion Bar Anchor	
Cleaning	0288 00-1
Installation	0288 00-2
Removal	0288 00-1
TOW Start	
Control Assembly and Bearing	
Installation	0332 00-3
TOW Start Bearing	
Removal	0332 00-2

INDEX, cont'd

Subject	WP Sequence No.-Page No.
TOW Start Control Assembly	
Adjustment	0331 00-1
Removal	0332 00-2
TOW Start Control Assembly Cover	
Installation	0333 00-2
Renoval	0333 00-1
Towing Hook/Eye	
Installation	0322 00-1
Removal	0322 00-1
Track	
Install	0298 00-3
Replace	0298 00-1
Upper, Turret Shield Door	
Installation	0347 00-2
Removal	0347 00-1
Track Shoe Assembly	
Replace	0299 00-1
Track Shoe Pad	
Installation	0300 00-1
Removal	0300 00-1
Track Tension Adjuster	
Installation	0295 00-2
Mount	
Installation	0295 00-2
Removal	0295 00-1
Removal	0295 00-1
Tracks	
Lower, Turret Shield Door	
Installation	0346 00-3
Removal	0346 00-1
Transducer	
Air Box Pressure	
Installation	0210 00-1
Removal	0210 00-1
Air box pressure	
Replace	0120 00-1
Fuel Return Pressure	
Installation	0135 00-2
Removal	0135 00-1
Fuel return pressure	
Replace	0118 00-1
Fuel Supply Pressure	
Installation	0134 00-1
Removal	0134 00-1

INDEX, cont'd

Subject	WP Sequence No.-Page No.
Fuel supply pressure	
Replace	0117 00-1
Turbo Outlet Pressure	
Installation	0209 00-2
Removal	0209 00-1
Turbo outlet pressure	
Replace	0119 00-1
Transmission	
Brakes	
Adjustment	0279 00-1
Oil Cooler	
Hoses, Fittings and Mountings	
Installation	0270 00-6
Removal	0270 00-1
Oil Filter Element	
Installation	0269 00-2
Removal	0269 00-1
Oil Level Dipstick, Tube, and Adapter	
Installation	0268 00-3
Removal	0268 00-1
Oil Supply and Return Hoses	
Installation	0208 00-4
Removal	0208 00-1
Steering	
Adjustment	0267 00-3
Operational Check	0267 00-1
Transmission controller	
Wiring harness	
Installation	0188 00-5
Removal	0188 00-1
Test	
Inspect	0188 00-5
Transmission Mount	
Installation	0265 00-2
Removal	0265 00-1
Transmission Oil	
Drain Tubes and Bracket	
Installation	0264 00-2
Removal	0264 00-1
High Temperature Switch	
Installation	0254 00-1
Removal	0254 00-1
Transmission Oil High Temperature Switch	
Installation	0206 00-1

INDEX, cont'd

Subject	WP Sequence No.-Page No.
Removal	0206 00-1
Transmission Range Controller/Bracket	
Installation	0266 00-4
Removal	0266 00-2
Transmission Wiring Harness	
Installation	0190 00-2
Removal	0190 00-1
Transmission, Brake	
Check	
Adjustment	0280 00-1
Transmitter	
Coolant Temperature	
Installation	0205 00-2
Removal	0205 00-1
Engine Oil Low Pressure	
Installation	0204 00-2
Removal	0204 00-1
Fuel quantity	
Install	0124 00-2
replace	0124 00-1
Tube	
Fire Extinguisher Cylinder Discharge	
Replace	0391 00-1, 0394 00-1
Turbo Exhaust Pipe , Heat Shield	
Heat Sheild, Turbo Ehaust Pipe	
Install	0154 00-3
Remove	0154 00-2
Turbo Outlet Pressure Transducer	
Installation	0209 00-2
Removal	0209 00-1
Turbo outlet pressure transducer	
Replace	0119 00-1
Turnbuckle, Parts	
Generator	
Installation	0170 00-2
Replace	0170 00-1
Turret Shield	
Door	
Installation	0345 00-5
Removal	0345 00-1
Door Lower Tracks	
Installation	0346 00-3
Removal	0346 00-1
Door Upper Track	

INDEX, cont'd

Subject	WP Sequence No.-Page No.
Installation	0347 00-2
Removal	0347 00-1
Turret Shield Door	
Latch Assembly	
Repair or Replacement	0344 00-1
Latch Strike	
Installation	0348 00-1
Removal	0348 00-1
Switch Assembly	
Installation	0349 00-3
Removal	0349 00-1
Turret Shield Panel	
Left	
Installation	0351 00-5
Removal	0351 00-1
Right	
Installation	0350 00-5
Removal	0350 00-1
U	
Universal Joints	
And Propeller Shaft	
Installation	0276 00-3
Removal	0276 00-2
V	
Valve	
Personnel Heater	
Replace	0381 00-1
Valve , Control	
Fire Extinguisher	
Replace	0393 00-1
Valve and Connector	
Exhaust Evacuator	
Removal	0146 00-1
Ventilating Fan Drive Belt	
Install	0148 00-2
Remove	0148 00-1
Ventilation Fan Assembly Mounting Bracket and Hardware, Driver's	
Installation	0260 00-3
Removal	0260 00-1
Ventilation Fan, Crew	
Installation	0259 00-4
Removal	0259 00-1

INDEX, cont'd

Subject — WP Sequence No.-Page No.

Vision block and seals
Driver's hatch
Removal . . . 0339 00-1
Vision block and seals, Installation
Driver's hatch, Installation . . . 0339 00-3
VISMOD Access Doors
Installation . . . 0307 00-3
Removal . . . 0307 00-2
VISMOD Panel
Left and Right Side
Installation . . . 0314 00-3
Removal . . . 0314 00-1
Voltage regulator
Adjust . . . 0176 00-1

W

Warning Light
Panel Assembly
Installation . . . 0214 00-2
Removal . . . 0214 00-1
Warning Light Panel
Installation . . . 0213 00-2
Instrument
Installation . . . 0217 00-1
Removal . . . 0217 00-1
Removal . . . 0213 00-1
Warning Panel
Wiring Harness
Installation . . . 0184 00-3
Removal . . . 0184 00-1
Warning panel
Wiring harness
Test
Inspect and repair . . . 0184 00-2
Warning panel lights
Installation . . . 0212 00-3
Removal . . . 0212 00-2
Wheel
Idler
Installation . . . 0292 00-2
Removal . . . 0292 00-1
Wiring Harness
1W4, Rear Main
Installation . . . 0187 00-16

INDEX, cont'd

Subject	WP Sequence No.-Page No.
Removal	0187 00-1
Test and Inspection	0187 00-15
Engine	
Clean, Inspect, and Repair	0191 00-5
Removal	0191 00-1
Instrument Panel Battery-Generator Gauge	
Installation	0216 00-3
Removal	0216 00-1
STE/ICE Engine	
Replace	0389 00-1
STE/ICE, Crew	
Replace	0388 00-2
Transmission	
Installation	0190 00-2
Removal	0190 00-1
Wiring harness	
Engine	
Installation	0191 00-5
Harness, wiring	
Assemble	0189 00-4
Disassemble	0189 00-1
Right headlight	
Install	0185 00-3
Removal	0185 00-1
Test	
Inspect	0185 00-3
Transmission controller	
Installation	0188 00-5
Removal	0188 00-1
Test	
Inspect	0188 00-5
Wiring harness 1W1	
Driver's communication box	
Remove	0183 00-1, 0183 00-3
Wiring harness 1W13	
Circuit breaker to fan switch	
Installation	0179 00-1
Removal	0179 00-1
Wiring harness 1W19	
Driver's fan to instrument panel	
Installation	0180 00-1
Removal	0180 00-1
Wiring Harness 1W5 or 1W6	
Headlight Extension	

INDEX, cont'd

Subject	WP Sequence No.-Page No.
Removal	0186 00-1
Wiring harness 1W5 or 1W6	
Headlight extension	
Installation	0186 00-3
Wirness harness 1W3	
Turret Power	
Remove	0181 00-1, 0181 00-5

By Order of the Secretary of the Army:

ERIC K. SHINSEKI
General, United States Army
Chief of Staff

Official

JOEL B. HUDSON
Administrative Assistant to the
Secretary of the Army
0107106

DISTRIBUTION:

To be distributed in accordance with the initial distribution number (IDN) 372547, requirements for TM 9-2350-366-20-1-1.

RECOMMENDED CHANGES TO PUBLICATIONS AND BLANK FORMS For use of this form, see AR 25-30; the proponent agency is OAASA	Use Part II *(reverse)* for Repair Parts and Special Tool Lists (RPSTL) and Supply Catalogs/Supply Manuals (SC/SM).	DATE
TO: *(Forward to proponent of publication or form) (Include ZIP Code)*	**FROM:** *(Activity and location) (Include ZIP Code)*	

PART I - ALL PUBLICATIONS (EXCEPT RPSTL AND SC/SM) AND BLANK FORMS

PUBLICATION/FORM NUMBER	DATE	TITLE

ITEM	PAGE	PARA-GRAPH	LINE	FIGURE NO.	TABLE	RECOMMENDED CHANGES AND REASON

** Reference to line numbers within the paragraph or subparagraph.*

TYPED NAME, GRADE OR TITLE	TELEPHONE EXCHANGE/AUTOVON, PLUS EXTENSION	SIGNATURE

TO: *(Forward direct to addressee listed in publication)*	**FROM:** *(Activity and location) (Include ZIP Code)*	**DATE**

PART II - REPAIR PARTS AND SPECIAL TOOL LISTS AND SUPPLY CATALOGS/SUPPLY MANUALS

PUBLICATION NUMBER	DATE	TITLE

PAGE NO.	COLM NO.	LINE NO.	NATIONAL STOCK NUMBER	REFERENCE NO.	FIGURE NO.	ITEM NO.	TOTAL NO. OF MAJOR ITEMS SUPPORTED	RECOMMENDED ACTION

PART III - REMARKS *(Any general remarks or recommendations, or suggestions for improvement of publications and blank forms. Additional blank sheets may be used if more space is needed.)*

TYPED NAME, GRADE OR TITLE	TELEPHONE EXCHANGE/AUTOVON, PLUS EXTENSION	SIGNATURE

RECOMMENDED CHANGES TO PUBLICATIONS AND BLANK FORMS For use of this form, see AR 25-30; the proponent agency is OAASA	Use Part II *(reverse)* for Repair Parts and Special Tool Lists (RPSTL) and Supply Catalogs/Supply Manuals (SC/SM).	DATE
TO: *(Forward to proponent of publication or form) (Include ZIP Code)*	**FROM:** *(Activity and location) (Include ZIP Code)*	

PART I - ALL PUBLICATIONS (EXCEPT RPSTL AND SC/SM) AND BLANK FORMS

PUBLICATION/FORM NUMBER	DATE	TITLE

ITEM	PAGE	PARA-GRAPH	LINE	FIGURE NO.	TABLE	RECOMMENDED CHANGES AND REASON

** Reference to line numbers within the paragraph or subparagraph.*

TYPED NAME, GRADE OR TITLE	TELEPHONE EXCHANGE/AUTOVON, PLUS EXTENSION	SIGNATURE

TO: *(Forward direct to addressee listed in publication)*	**FROM:** *(Activity and location) (Include ZIP Code)*	**DATE**

PART II - REPAIR PARTS AND SPECIAL TOOL LISTS AND SUPPLY CATALOGS/SUPPLY MANUALS

PUBLICATION NUMBER	DATE	TITLE

PAGE NO.	COLM NO.	LINE NO.	NATIONAL STOCK NUMBER	REFERENCE NO.	FIGURE NO.	ITEM NO.	TOTAL NO. OF MAJOR ITEMS SUPPORTED	RECOMMENDED ACTION

PART III - REMARKS *(Any general remarks or recommendations, or suggestions for improvement of publications and blank forms. Additional blank sheets may be used if more space is needed.)*

TYPED NAME, GRADE OR TITLE	TELEPHONE EXCHANGE/AUTOVON, PLUS EXTENSION	SIGNATURE

RECOMMENDED CHANGES TO PUBLICATIONS AND BLANK FORMS For use of this form, see AR 25-30; the proponent agency is OAASA	Use Part II *(reverse)* for Repair Parts and Special Tool Lists (RPSTL) and Supply Catalogs/Supply Manuals (SC/SM).	DATE
TO: *(Forward to proponent of publication or form) (Include ZIP Code)*	**FROM:** *(Activity and location) (Include ZIP Code)*	

PART I - ALL PUBLICATIONS (EXCEPT RPSTL AND SC/SM) AND BLANK FORMS

PUBLICATION/FORM NUMBER	DATE	TITLE

ITEM	PAGE	PARA-GRAPH	LINE	FIGURE NO.	TABLE	RECOMMENDED CHANGES AND REASON

** Reference to line numbers within the paragraph or subparagraph.*

TYPED NAME, GRADE OR TITLE	TELEPHONE EXCHANGE/AUTOVON, PLUS EXTENSION	SIGNATURE

TO: *(Forward direct to addressee listed in publication)*	**FROM:** *(Activity and location) (Include ZIP Code)*	**DATE**

PART II - REPAIR PARTS AND SPECIAL TOOL LISTS AND SUPPLY CATALOGS/SUPPLY MANUALS

PUBLICATION NUMBER	DATE	TITLE

PAGE NO.	COLM NO.	LINE NO.	NATIONAL STOCK NUMBER	REFERENCE NO.	FIGURE NO.	ITEM NO.	TOTAL NO. OF MAJOR ITEMS SUPPORTED	RECOMMENDED ACTION

PART III - REMARKS *(Any general remarks or recommendations, or suggestions for improvement of publications and blank forms. Additional blank sheets may be used if more space is needed.)*

TYPED NAME, GRADE OR TITLE	TELEPHONE EXCHANGE/AUTOVON, PLUS EXTENSION	SIGNATURE

METRIC CONVERSION CHART

APPROXIMATE CONVERSION FACTORS

TO CHANGE	TO	MULTIPLY BY
Inches	Centimeters	2.540
Feet	Meters	0.305
Yards	Meters	0.914
Miles	Kilometers	1.609
Square Inches	Square Centimeters	6.451
Square Feet	Square Meters	0.093
Square Yards	Square Meters	0.836
Square Miles	Square Kilometers	2.590
Acres	Square Hectometers	0.405
Cubic Feet	Cubic Meters	0.028
Cubic Yards	Cubic Meters	0.765
Fluid Ounces	Milliliters	29.573
Pints	Liters	0.473
Quarts	Liters	0.946
Gallons	Liters	3.785
Ounces	Grams	28.349
Pounds	Kilograms	0.454
Short Tons	Metric Tons	0.907
Pound-Feet	Newton-Meters	1.356
Pounds per Square Inch	Kilopascals	6.895
Miles per Gallon	Kilometers per Liter	0.425
Miles per Hour	Kilometers per Hour	1.609

TO CHANGE	TO	MULTIPLY BY
Centimeters	Inches	0.394
Meters	Feet	3.280
Meters	Yards	1.094
Kilometers	Miles	0.621
Square Centimeters	Square Inches	0.155
Square Meters	Square Feet	10.764
Square Meters	Square Yards	1.196
Square Kilometers	Square Miles	0.386
Square Hectometers	Acres	2.471
Cubic Centimeters	Cubic Inches	0.060
Cubic Meters	Cubic Feet	35.315
Cubic Meters	Cubic Yards	1.308
Milliliters	Fluid Ounces	0.034
Liters	Pints	2.113
Liters	Quarts	1.057
Liters	Gallons	0.264
Grams	Ounces	0.035
Kilograms	Pounds	2.205
Metric Tons	Short Tons	1.102
Newton-Meters	Pound-Feet	0.738
Kilopascals	Pounds per Square Inch	0.145
Kilometers per Liter	Miles per Gallon	2.354
Kilometers per Hour	Miles per Hour	0.621

TEMPERATURE CONVERSIONS

$5/9\ (^{\circ}F - 32) = {}^{\circ}C$
212° Fahrenheit is equivalent to 100° Celsius
90° Fahrenheit is equivalent to 32.2° Celsius
32° Fahrenheit is equivalent to 0° Celsius
$9/5\ C^{\circ} + 32 = F^{\circ}$

PIN: 078914-000